FLUIDRA

POOL & SPA

GENERAL CATALOGUE

2021



ASTRALPOOL

FLUIDRA

THE PERFECT POOL EXPERIENCE

We are a leader in the global pool industry. Our portfolio includes some of the most trusted brands, including Jandy®, AstralPool®, Polaris®, Cepex®, Zodiac®, CTX Professional® and Gre®. We offer our customers an expansive array of products across both the residential and commercial pool and wellness markets, and we have a strong geographical footprint with operations in over 45 countries.

We have some 5,500 employees and the necessary resources to accelerate innovation in critical areas like energy-efficiency, robotics and the Internet of Things.

We are guided by clear values and come to work every day with a simple and direct mission: **To create the perfect pool and wellness experience**.

By staying focused on this mission, we create value for all our stakeholders: customers, pool owners, investors, employees, suppliers and society.

INTEGRATED BUSINESS MODEL



R+D+i

Excellence in innovation with +200 engineers and some 1,200 patents



Production

34 flexible multi-technology plants in key countries



Logistics

Logistics operators to ensure fast and reliable deliveries



Distribution

+140 points of sale, giving support and training to the professional clients in over 45 countries



Engineering

Design and engineering of water projects

KEY FIGURES

5,500
No. of employees

+45
No. of countries

+140
No. of sales branches

34
No. of production centers

HIGHLY RECOGNIZED BRANDS

Jandy · ASTRALPOOL · Polaris · CEPEX · ZODIAC · Gre

A GLOBAL POWERHOUSE

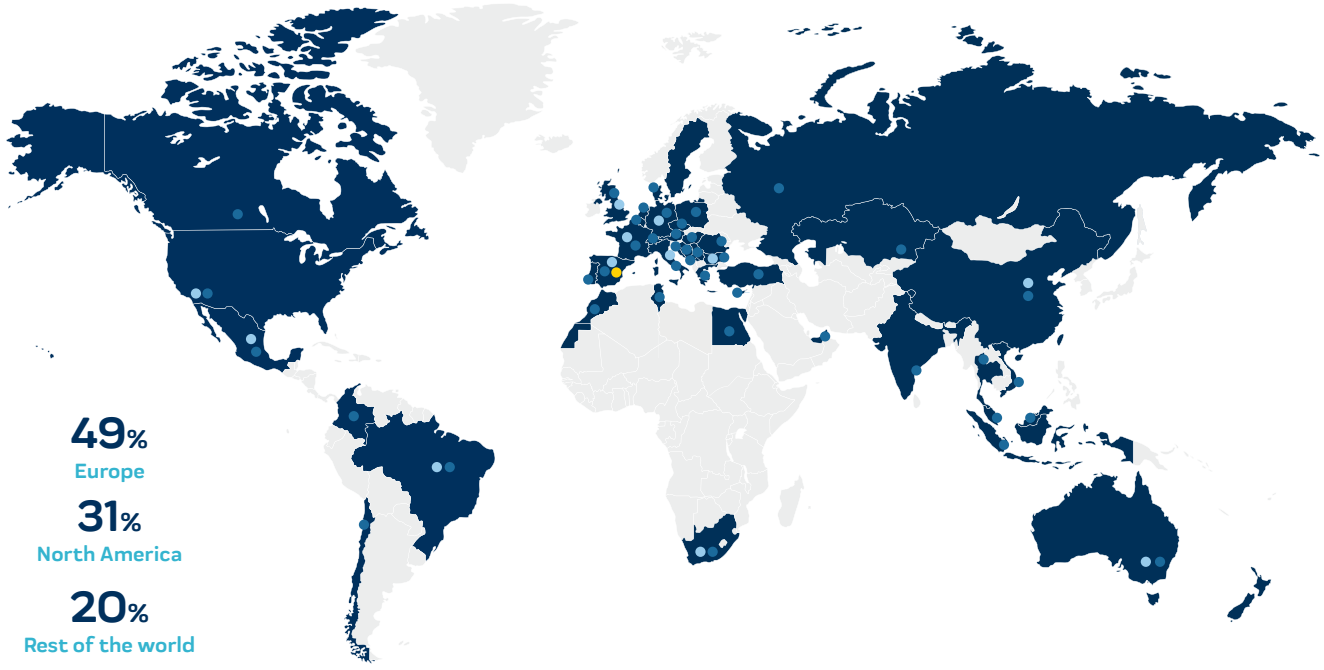

49% Europe

31% North America

20% Rest of the world

● Own sales branch ● Production centres ● Headquarters



NEW PRODUCTS 2021



Komfi ladder

PLASTIC STEPS TO ENSURE COMFORTABLE
AND SECURED TREAD

See page 44



Niagara touchless shower

A SHOWER WITH PROXIMITY SENSOR
THAT TURN ON WITHOUT CONTACT

See page 59



EASYCOLOR Inlet sheaths

RENEW OR UPGRADE POOLS EASILY
WITHOUT CHANGING THE SKIMMER MOUTH

See page 83

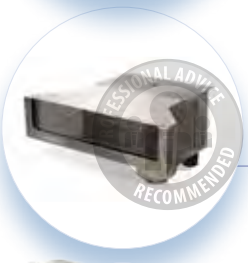

High water level skimmer

THE INFINITE POOL EFFECT (+-/4 cm)
MADE OF STAINLESS STEEL

See page 84



Filtering skimmer

THE EASY-TO-INSTALL 2-IN-1 INTEGRATED
SOLUTION (SKIMMER + CARTRIDGE)

See page 107





Stainless Steel embellishers

TO RENEW OR UPGRADE ABS POOL SHELL EQUIPMENT

See page 127



Verdon ES pump

A RELIABLE PUMP
THAT MAKES IT EASY FOR YOU

See page 176



E-Next salt water chlorinator

SALT WATER CHLORINATION
FOR ALL

See page 218



LumiPlus S. S. FlexiNiche

GREAT FLEXIBILITY.
CAN BE FITTED TO NICHES Ø 180 TO 230 mm

Fluidra Connect compatible

See page 251



Easy Salt Next

SALT ELECTROLYSIS SYSTEM FOR
RESIDENTIAL AND PUBLIC POOL APPLICATIONS

Fluidra Connect compatible

See page 581



Airpool + U.V. disinfection system

OPTIONAL U.V.
DISINFECTION SYSTEM

See page 645

HOW TO ENJOY

1 MAINTAIN WATER PARAMETERS

Step one:
MEASURE pH / Chlorine

2 times a week

- Test strips
- DPD1 Tablets
- Blue Connect
- Automatic equipment

Step two:
ADJUST

pH

pH Minus or pH Plus

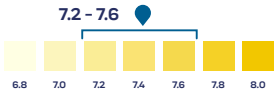

Free chlorine

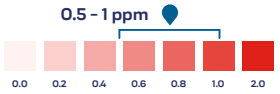

- Chlorine tablets or liquid chlorine
- Automatic dosing
- Salt electrolysis

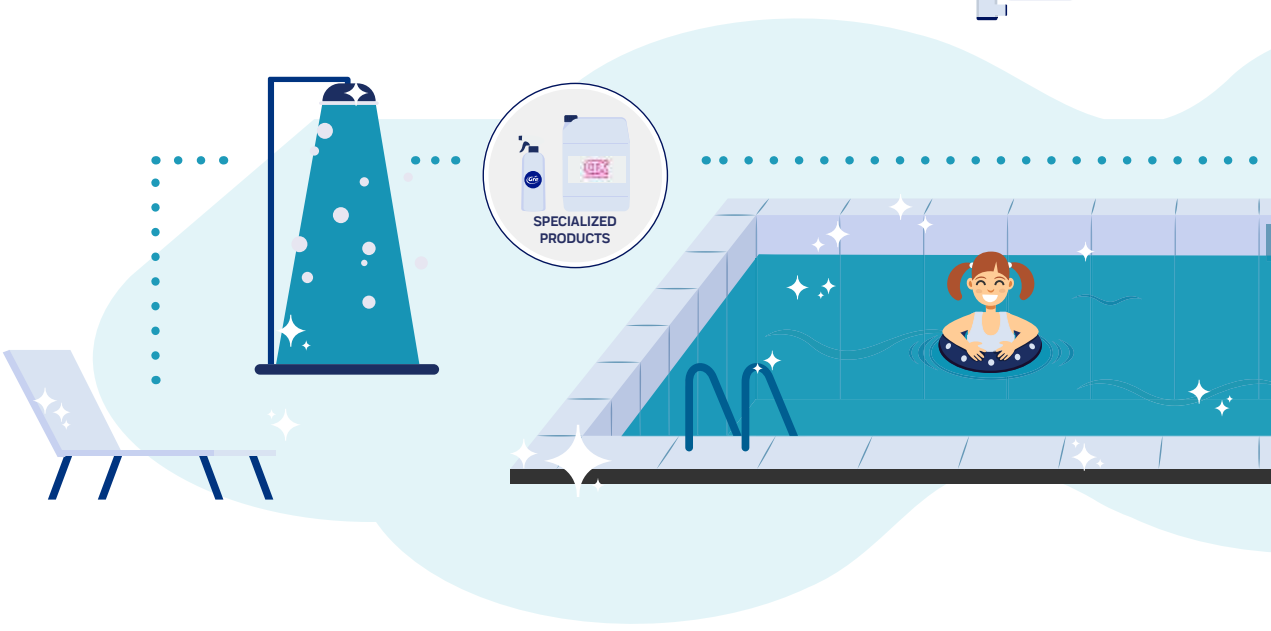

A SAFE POOL

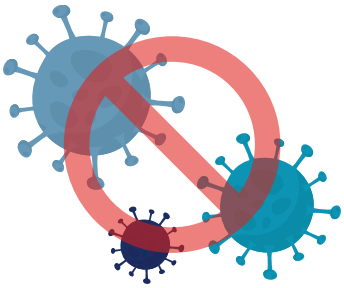

2 KEEP POOL AND EQUIPMENT CLEAN

3 DISINFECT THE POOL ENVIRONMENT

#EnjoyaSafePool

@Fluidra Fluidra Fluidra Group

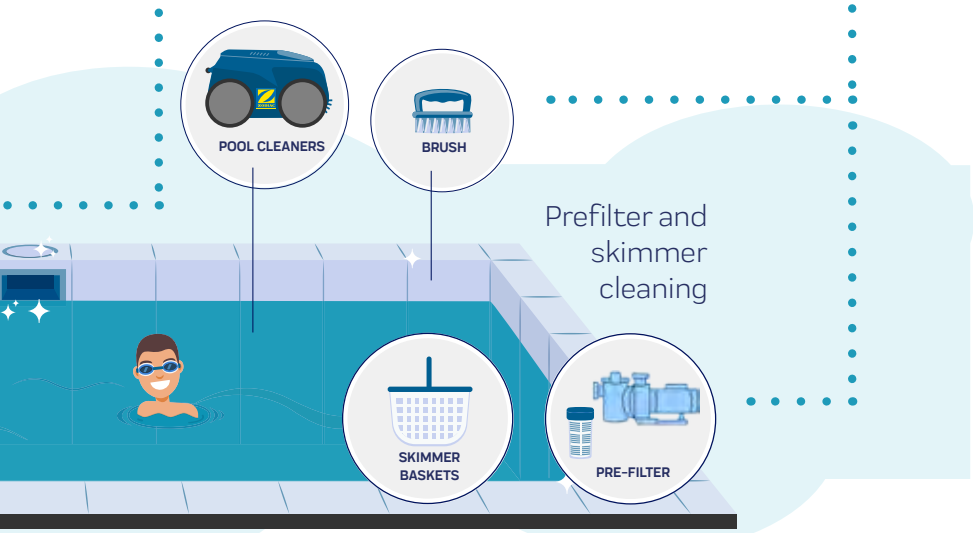

ASTRALPOOL CTX Professional Gre ZODIAC

FLUIDRA
THE PERFECT POOL EXPERIENCE

TOOLS
OF THE ASTRALPOOL WEBSITE

Fluidra configurators

Heat Pump: AstralPool configurator helps to choose the most adapted model based on your expectations and your environment. With its wide range of heat pumps, you will achieve perfect comfort.

Dehumidifier: AstralPool configurator helps you to select the dehumidifier that adapts better to the conditions of your pool.

LumiPlus Flexi: Lumiplus Flexi is the new projector from AstraPool and it is characterized by its great adaptability. With this solution you can choose:
- The color of the light (white, warm white and RGB)
- The mounting system (niche, wall , nozzle)
- The faceplate color that best matches your pool (beige, light grey, anthracite and stainless steel)

Using this configurator, you will be able to choose the LED Projector that best suits your requirements in just 6 steps.

Find all these calculation tools at:
https://www.astralpool.com/en/calculation-tools/
and in the ToolBox Fluidra Application (see below)





Fluidra calculators

Victoria Plus Silent VS: The following AstralPool calculator makes it possible to calculate the annual savings made by installing a Victoria Plus Silent Variable Speed pump in comparison with conventional single speed pumps found on the market.

Kivu: The filtration pump Kivu stands out for its high efficiency. With its AstralPool calculator, you can not only select the most suitable model for your pool but also calculate the savings obtained.

Find all these calculation tools at:
https://www.astralpool.com/en/calculation-tools/
and in the ToolBox Fluidra Application (see below)



Fluidra TOOLBOX

Fluidra toolbox is a single application where pool professionals can download our product catalogs and leaflets as well as access directly on mobile or tablets to all Fluidra's configuration and calculator tools.



ANDROID APP ON Google play

Available on the iPhone App Store

Download it now!

FLUIDRA PRO | ACADEMY

THE ONLINE LEARNING PLATFORM FOR FLUIDRA CUSTOMERS

proacademy.fluidra.com

Fluidra Pro Academy is a learning platform designed for you, with all of the expertise and tools that you need to sell our products with confidence and assurance.



How to become a PRO ?

1. Log on to proacademy.fluidra.com
2. Register
3. **Start** learning

Accessible
Anytime, anywhere

Quick and easy
Greater technical expertise at your fingertips

Levels
Basic, Intermediate, Advanced

Exclusive content
Learn what nobody else knows. For professionals

The very latest
Be the first to find out about new market launches



ASTRALPOOL | CTX Professional | PISCINE LAGHETTO by ASTRALPOOL | ZODIAC

PISCINE LAGHETTO®
by ASTRALPOOL



your water mirror



Dolce Vita

Elegant in design, this system has revolutionized the world of pools. The unbeatable quality rattan and sound technology ensure a long service life.



PLAYA

An extremely elegant mini-pool that is perfectly suited for terraces and gardens.
Hot water, an air massage and bubble feature, and a space for sunbathing.
Available in Laghetto's colours: white, grey and coffee.



pop!

The classic above-ground pool has been revamped to bring colour into your garden.
Pop! can be turquoise, white, sand, green or lilac.
Design adapted to new technology backed by 40 years of experience.

For further information go to: www.piscinelaghetto.com



OUR COMMITMENT TO **SUSTAINABLE POOLS**

Simple details for a great Future

Respect for the water and **its rational use** is the core philosophy of our Group.
Our commitment to sustainability has led us to create a **specific line of sustainable products**.



Thermal covers

- Reduces evaporation by up to 65%.
- Saves 25% of heat energy.

-65%



Variable speed pumps

- Reduces electricity consumption by up to 85%.
- Reduces the sound level by 75%.

-75% **-85%**



LED lighting

- Reduces electrical energy consumption by up to 92%.

-92%



Active glass filter media

- Reduces water consumption by 25% during filter backwash.

-25%



NanoFiber Filter

- Reduces water consumption for filter backwash by 50%.

-50%



OC-1 filtration media

- Savings of 40% in filter backwashes.

-40%



Pro Elyo Touch

- Saving of up to 33% on your pool's heating bills.

-33%

GENERAL **INFORMATION**

Unit conversion table

Length:	m	in	ft	
Metre (m)	1	39.370	3.281	
Inch (in)	0.025	1	0,083	
Foot (ft)	0.305	12	1	
Surface:	m^2	in^2	ft^2	cm^2
Square metre (m^2)	1	1,150.388	10.764	10,000
Square inch (in^2)	0.000645	1	0.0069	6.450
Square foot (ft^2)	0.093	144.036	1	929.03
Square centimetre (cm^2)	0.0001	0,155	0.00107	1
Volume:	m^3	UK gal	US gal	l
Cubic metre (m^3)	1	219.969	264.172	1000
Imperial gallon (UK gal)	0.0045	1	1.201	4.546
US gallon (US gal)	0.0038	0.833	1	3.785
Litre (l)	0.001	0.220	0.264	1
Speed:	m/s	in/s	ft/s	m/h
Metres / second (m / s) v	1	39.370	3.281	3600
Inch / second (in / s)	0.025	1	0.083	91.44
Foot / second (ft / s)	0.305	12	1	1097.28
Metre / hour (m / h)	0.00028	0.011	0.00091	1
Flow rate:	$m^3/m^2.h$	US gal/ft^2.min	UK gal/ft^2.min	ft^3/ft^2.min
(m^3 / m^2.h)	1	0.409	0.341	0.055
(US gal / ft^2.min)	2.445	1	0.833	0.134
(UK gal / ft^2.min)	2.936	1.201	1	0.158
(ft^3 / ft^2.min)	18.322	7.474	6.311	1
Mass:	kg	g	lb	
Kilogram (kg)	1	1000	2.205	
Gram (g)	0.001	1	0.0022	
Pound (lb)	0.454	453.59	1	
Pressure:	Pa	bar	kg/cm^2	psi
Pascal (Pa)	1	0,00001	0.00001	0.00014
Bar (bar)	100000	1	1.019	14.504
Kilogram / Square cent. (kg / cm^2)	98100	0.981	1	14.228
Pound / square inch (psi)	6894.76	0.0689	0.070	1
Energy:	J	kWh	cal	kcal
Joule (J)	1	0.000000277	0.239	0.00024
Kilowatt per hour (kWh)	3600000	1	860421	861.244
Calorie (cal)	4.186	0.00000116	1	0.001
Kilocalorie (kcal)	4186	0.0012	1000	1
Power:	kW	HP	BTU/h	
Kilowatt (kW)	1	1.341	3412.14	
Horsepower (HP)	0.746	1	2544.43	
British Thermal Unit / hour (BTU / h)	0.00029	0.00039	1	
Flow rate:	m^3/h	US gal/min	UK gal/min	
Cubic metre / hour (m^3 / h)	1	3.667	4.403	
US gallon / minute (US gal / min)	0.273	1	1.201	
UK gallon / minute (UK gal / min)	0.227	0.833	1	
Litres / second (l / s)	3.6	13.198	15.85	
Temperature:	°C	°F	K	
Degrees Celsius (°C)	1	[(9/5)x°C]+32	°C+273.16	
Fahrenheit (F)	(5/9)x(°F-32)	1	n.a	
Kelvin (k)	K-273.16	n.a	1v	

Size of pipe and water flow rate

DN mm	D mm	Inches	Flow rate (m^3/h) depending on the speed of the water Suction (1.2 m/s)	Discharge (2 m/s)
15	20	1/2"	1	1.6
20	25	3/4"	1.6	2.7
25	32	1"	2.7	4.4
32	40	1 1/4"	4.4	7.3
40	50	1 1/2"	7.5	12.5
50	63	2"	11	18.4
65	75	2 1/2"	15.7	26.1
80	90	3"	22.3	37.1

Due to ongoing changes, some photographs may not match the products exactly.

Printed on paper from sustainable forests. Fluidra contributes to environmental protection.

PEFC · LONG-LIFE ISO 9706 · PH NEUTRAL · HEAVY METAL ABSENCE CE 94/62 · ELEMENTAL CHLORINE FREE GUARANTEED

General diagram of installation of swimming pool equipment

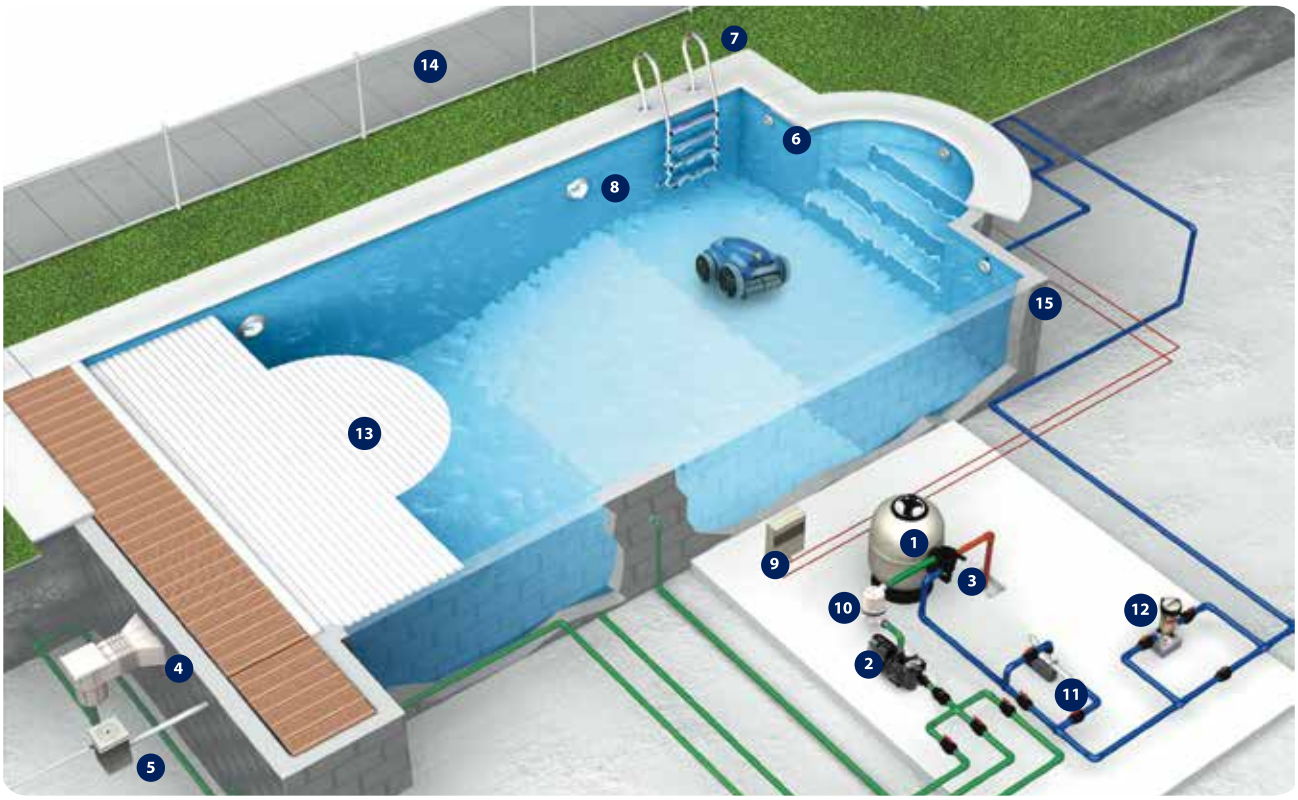

1. Filter
2. Pump
3. Multiport valve
4. Skimmer
5. Level regulator
6. Return inlet
7. Ladder
8. Light spot
9. Electric control cabinet
10. Hydrospin
11. Heat exchanger
12. Chlorine dispenser
13. Automatic pool cover
14. Safety barriers
15. Pool shell

Filter and pump selection table

Pool volume	Daily filtration	Filtration speed	Filter Ø	Plumbing		Pump	Sand
m^3	h	$m^3/h/m^2$	mm	mm	inches	HP	kg
40	8	50	350	50	1 1/2"	0.3	40
40-50	8	50	400	50	1 1/2"	0.5	60
50-60	8	50	450	50	1 1/2"	0.5	70
60-75	8	50	500	50	1 1/2"	0.5	100
75-90	8	50	560	50	1 1/2"	0.75	130
90-115	8	50	600	50	1 1/2"	1	160
115-130	8	50	650	63	2"	1	175
130-170	8	50	750	63	2"	1.5	300
170-200	8	50	800	63	2"	2	330

Best in class

Best value for money

Exclusive to the professional channel*

Unique sustainable quality

Recommended for public pools

3-year warranty

New product

Until end of stocks

Fluidra Connect compatible

*Product recommended for sale in physical stores due to the product's specialized and complex nature and/or its installation.

TABLE OF **CONTENTS**

A
Above ground pools 347
Accessories 203
Accessories for minispas 413
Accessories for minispas 621
Accessories - Saunas 420
Air blowers 415
Air blowers 623
Air-water heat pumps for indoor installation 438
Air-water heat pumps for indoor installation 639
Air-water heat pumps for outdoor installation 434
Air-water heat pumps for outdoor installation 638
Algicides 197
Alkorplan 150/100 reinforced liner 281
Alkorplan 200/100 reinforced liner 279
Alkorplan liner accessories 283
Aquarmony underwater music system 274
AstralPool Bike 63
AstralPool Bike 475
AstralPool pool shell material color range 77
Attachments for competition equipment 662
Automatic covers 312
Automatic covers: Above-ground models 314
Automatic covers: Accessories 330
Automatic covers: comparison 302
Automatic covers: Display models 323
Automatic covers: Manufacturing specifications 332
Automatic covers: Polycarbonate slats and steps 329
Automatic covers: PVC slats 327
Automatic covers: Step slats 328
Automatic covers: Submerged models 318
Automatic covers: Wireless remote controls with key 331
Automatic pool cleaners for public pools 600
Automatic regulation and control equipment 595
Automatic UV disinfection 586
Automatic UV disinfection - Residential pools 220
B
Blower pumps 189
Blow-moulded sand filters 143
Blue Connect accessories 205
Blueriiot 26
Blueriiot water testers 204
Bluespring 521
Bobbin wound filters 532
Bobbin-wound sand filters 158
C
Cartridge filters 140
Centrifugal pumps 565
Classification of liners depending on the pool 288
Cleaners 201
Climate zones 428
Coding structure for private spas with cabinet 389
Collectors for valve manifolds 344
Colour chart for spas 389
Colour chart for spas 604
Compact filtration for spas 405
Compact filtration for spas 613
Compacts with interior installation 159
Compacts without interior installation 159
Competition pool systems 650
Complements for spas 406
Complements for spas 614
Concrete pool - 15 L Skimmers 78
Concrete pool - 17.5 L Skimmers 79
Concrete pool - ABS Inlets 97
Concrete pool - ABS Inlets 503
Concrete pool - Drain accessories 501
Concrete pool - Drain grilles 502
Concrete pool - Drains 499
Concrete pool - Level regulators 88
Concrete pool - Main drain accessories 94
Concrete pool - Main drain grilles 95
Concrete pool - Main drains 90
Concrete pool - Skimmer accessories 82
Concrete pool - Stainless steel 17.5 L skimmers 84
Concrete pool - Stainless steel inlets 102
Concrete pool - Stainless steel inlets 504
Concrete pool - Stainless steel skimmer accessories 87
Concrete pool - Wall bushings 103
Concrete pool - Winter accessories 104
Conditions for accepting an order 290
Connect & Go Commercial Products 458
Connect & Go products 34
Continuous flocculation system 595
Control boxes 179
Control boxes 559
Countercurrent swimming equipment 183
Countercurrent swimming equipment – Selection guide 182
D
Dehumidifiers 445
Dehumidifiers 644
Diatomaceous filters 139
Diffuser filter 344
Disinfectants 194
Diving boards and trampolines 53
Dosing equipment 231





E
Dosing pumps for commercial pools 589
Dosing pumps for residential pools 228
Electrical accessories for spas / mini spas 414
Electrical accessories for spas / mini spas 622
Electric heaters 441
Electric heaters 640
Emotional showers 631
F
Filter features and selection 136
Filter ring manifolds for 1" laterals 343
Filter ring manifolds for 3/4" laterals 342
Filtration media & accessories 561
Filtration media and accessories 166
Fitt B-Active and Fitt Idroflex 337
Floats 656
Flocculants 199
Fluidra Connect 456
Fluidra Connect accessories 36
Fluidra Connect accessories 461
Fluidra products NN compatible 39
Freepool² 578
G
Gauge panel unit 166
Glass tiling for pools 292
Glass tiling: Projects 299
Glass tiling: Technical specifications 300
Grilles for overflow 67
Grilles for overflow 491
H
Halogen lighting 267
Handrail attachment support 472
Handrails 471
Heating sizing help tables 429
High-performance laminated sand filters 151
Hoses 247
Hydrospin pre-filter 140
I
Iguazu showers 57
In-ground overflow commercial spas 605
In-ground residential spas 403
Injection moulded sand filters 142
Inoxpool 385
Inoxpool 515
Installation diagrams 132
Internet of Pools 18
L
Laminated filters 527
Laminated sand filters 146
Lane rope accessories 658
Lane ropes 655
Lane rope storage equipment 657
LED lighting - control systems 262
LED lighting - LumiPlus 251
LED lighting - other LED solutions 266
LEDs selection guide 250
Lifeguard chairs 473
Life-saving accessories 473
Liner accessories 285
Liner accessories 408
Liner accessories 616
Liner and prefabricated pool - 15 L Skimmers 105
Liner and prefabricated pool - 17.5 L Skimmers 107
Liner and prefabricated pool - 17.5 L Stainless steel skimmer 112
Liner and prefabricated pool - ABS Inlets 120
Liner and prefabricated pool - ABS Inlets 508
Liner and prefabricated pool - Accessories for Stainless steel skimmers 112
Liner and prefabricated pool - Drains 505
Liner and prefabricated pool - Level regulators 119
Liner and prefabricated pool - Main Drain accessories 118
Liner and prefabricated pool - Main Drain accessories 507
Liner and prefabricated pool - Main drains 114
Liner and prefabricated pool - Skimmer accessories 111
Liner and prefabricated pool - stainless steel embellisherS for ABS 127
Liner and prefabricated pool - Stainless steel inlets 126
Liner and prefabricated pool - Stainless steel inlets 510
Liner and prefabricated pool - Wall bushings 129
Liners for stairs 289
Liquid 278
M
Manual pool cleaners - Blue Line Range 239
Manual pool cleaners - Classic Range 242
Manual pool cleaners - Shark Range 241
Modular prefabricated pools 512
Modular prefabricated pools - One-off projects 514
Multiport valves 161
Nanofiber filter 138
Neolysis for public pools 584
Neolysis for residential pools 220
Net'n'Clean Integrated Cleaning System 245
Niches 270
Nordic baths 635
N
O
OC-1 Filters 141
Optional equipment 390
Optional equipment 604
Ornamental water features - Cannons and waterfalls 64
Our range of spas 388
pH & Chlorine automatic regulations - Residential pools 224
Platforms 54

TABLE OF **CONTENTS**

P
Pluvium showers 56
Pocket gauges 210
Pool access - Accessories, anchoring fixtures and grips 51
Pool access - Anchoring sockets and handrails 467
Pool access - Asymmetrical and easy access ladders 48
Pool access - Disabled access 469
Pool access - Elegance ladders 44
Pool access - Exit grab rails 466
Pool access - Exit grab rails and lower end 50
Pool access - Komfi ladders 44
Pool access - Ladders 464
Pool access - Mixed model ladders 47
Pool access - Standard model ladders 46
Pool access - Wall model ladders 45
Pool cleaner accessories 238
Pool cleaner accessories 602
Pool cover accessories 307
Pool Jet accessories 412
Pool Jet accessories 620
Pool main drains information 89
Pool main drains information 89
Pool main drains information 113
Pool main drains information 113
Pool main drains information 498
Pool shell components - Range of colours 74
Premium thermal covers for summer 304
Pressure fluid handling PVC accessories 341
Pressure fluid handling PVC PN-16 fittings 338
Pressure PVC valves 340
Professional range 604
Public pool filtration coding 526
Pump features and selection 170
Regulators 193
Reinforced PVC protection covers 307
R
Residential pools water treatment solutions 214
Salt electrolysis and pH/Cl control 580
Salt water electrolysis - Residential pools 215
S
Saunas 417
Saunas 625
Self-priming pumps 174
Self-priming pumps 564
Showers - Accessories 62
Showers - Outdoor footbaths 475
Showers - Showers with timers 61
Showers - Showers with timers 474
Showers - Shower trays 63
Showers - Shower tunnels 474
Showers - Solar showers 58
Signage 660
Skimfilters 130
SkyPool Commercial Pools 518
Slides 54
Soprema Pool 150/100 reinforced liner 277
Soprema Pool 180/100 reinforced liner 277
Spa range - Essential range 399
Spa range - Ocean Dreams range 396
Spa range - Swimspa range 401
Stainless steel 17.5 L skimmers 84
Stainless steel public spas 612
Stainless steel public spas with overflow channel 610
Standard equipment 391
Steam baths 628
Storage rollers for covers 309
Strainers 572
Suction automatic pool cleaners 238
Supports for valve manifolds 560
Swimming pool competition podiums 652
Swimming pool heating solutions 424
Swimming pool shell material packs 130
Test kits and photometers 210
Thermal covers - Bubble 303
T
Thermal covers - Foam 305
Transformers and accessories 271
Turning panels 661
Types of coatings 389
UV systems 220
Valve manifolds 557
U
Valves and hoses 574
V
Variable speed pumps 173
Water-air chillers for indoor or outdoor installation 440
Water games and ornamental water features 476
W
Water meters 595
Water meters & Control devices 234
Water polo goal 662
Water-water exchanger 442
Water-water exchanger 641
Water-water plate heat exchanger 444
Water-water plate heat exchanger 642
Winter accessories 104
Winterising products 202





INTERNET OF POOLS



POOL SURROUND EQUIPMENT



POOL SHELL EQUIPMENT



FILTRATION



PUMPS



WATER TREATMENT PRODUCTS



WATER TREATMENT EQUIPMENT



CLEANING EQUIPMENT



POOL LIGHTING



POOL LINING MATERIAL



COVERS AND ROLLERS



PVC FITTINGS FOR POOLS



POOLS

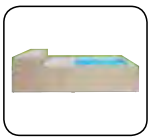

SPAS AND SAUNAS



HEATING AND DEHUMIDIFICATION



COMMERCIAL POOLS & WELLNESS





INTERNET OF POOLS

18 • Internet of Pools
26 • Blueriiot
34 • Connect & Go products
36 • Fluidra Connect accessories
39 • Fluidra products NN compatible

Internet of Pools

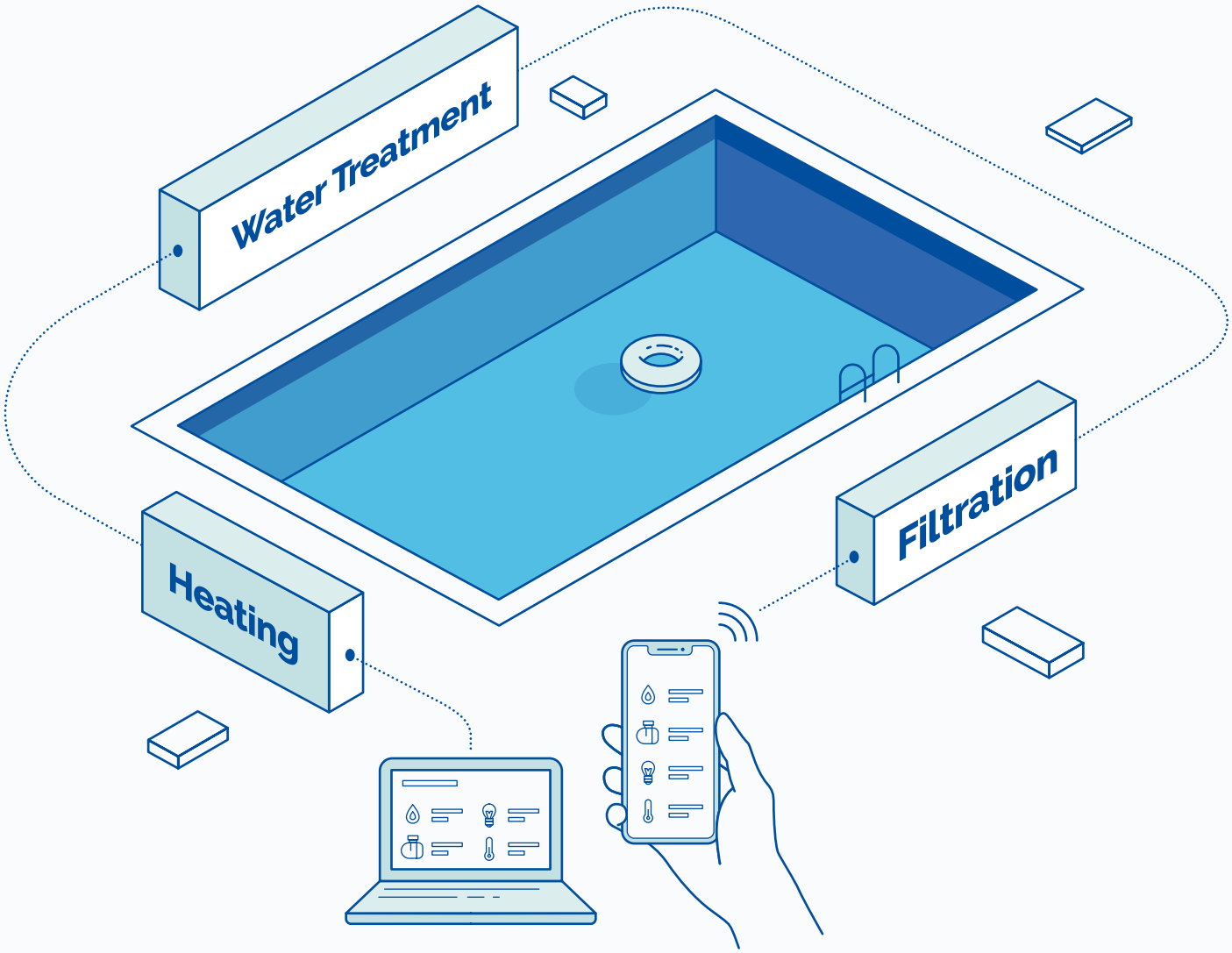

Your assistant for the installation, control, and maintenance of your swimming pools

Peace of Mind

Users and professionals are able to access in real-time from any place and remotely to all the elements of the pool, in order to check their proper functioning.

Comfort

Pool professionals will be able to carry out the remote management of every swimming pool (filtration, water treatment, heating, etc...) and outdoor equipment (lighting, irrigation, etc...).

Sustainability

The automation technology allows an efficient and eco-friendly pool equipment control for a perfect pool experience.

Pool Experience

Connected devices or connected pools allow to share easily pool information, improving the user experience and its maintenance.

A Fluidra connected solution for each type of pool

Fluidra's Smart Pools Solutions works on all type of pools thanks to a wide range of products.

TEST STRIPS

Blue Check + Blueriiot Pool & Spa Assistant app

Basic solution

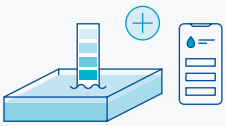

- Measure the quality of the water using the test strips.
- Follow the App-guide with personalized tips for treating your pool water.
- Access the status of your pool water

CONNECTED SENSORS

Blue Connect Go + Blueriiot Pool & Spa Assistant app

Semi-professional solution



- Smart pool water analyzer that measures water quality.
- Follow the App-guide with personalized tips for treating your pool water.
- Access the status of your pool water.

Blue Connect Plus + Blueriiot Pool & Spa Assistant app

Semi-professional solution



- Smart pool water analyzer with total monitoring of water parameters.
- When action is needed, a notification is sent and personalized advices help to optimize the use of chemicals.
- Pool Professional Web access to monitor all pools remotely.

CONNECTED DEVICES

Elite Connect / Control Connect + Pool Station APP

Professional solution



- Smart control of water quality.
- Easy access for users and professionals through the APP as well as the web portal.
- Possibility of controlling other external elements such as filtration, waterfalls, lighting, irrigation...

CONNECTED POOLS

Fluidra Connect & Go + Fluidra Connect APP

Complete professional solution



- Remote management of the pool (filtration, treatment and extras).
- More efficient use of energy consumption (sustainability).
- Installation pre configured through products kit. Reduces installation time by 80%.

Fluidra Connect & Go + NN compatible products + Fluidra Connect APP

Tailor-made professional solution

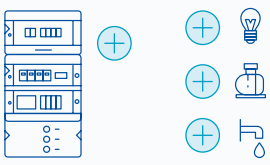

- Allows control, diagnosis and management of the pool remotely.
- Control multiple external elements such as filtration, waterfalls, lighting, irrigation...
- Maintenance management of several pools from a single portal.

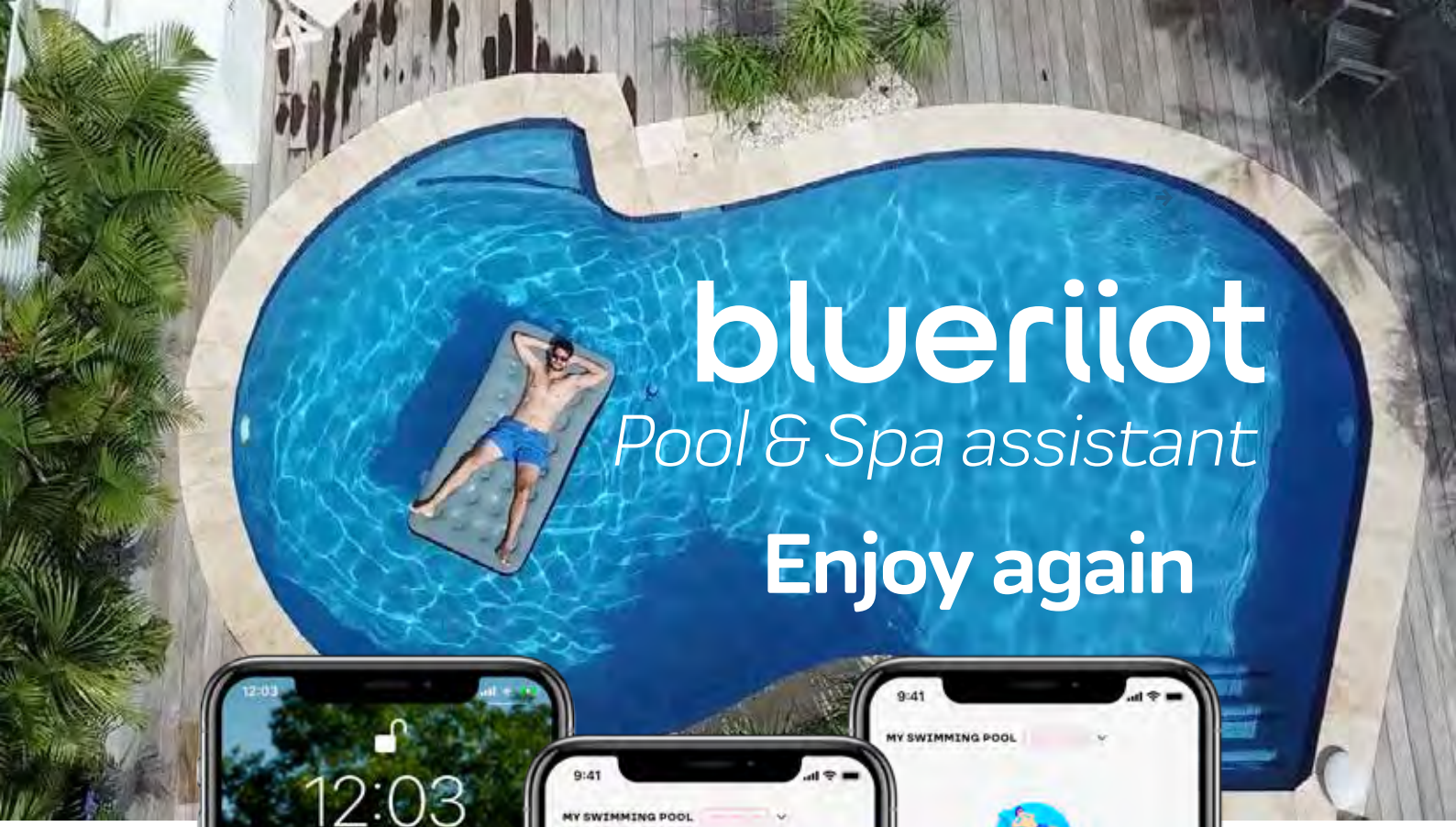



Blueriiot Pool & Spa Assistant digitalises swimming pools and spas

Blueriiot Pool & Spa Assistant is an application that helps the user to maintain and enjoy his swimming pool or his spa, thanks to the integration of connected products and smart home services.
Blueriiot Pool & Spa Assistant gives the user the chance to enjoy his pool with peace of mind.

In one single App, the user benefits from several features :

- Access to pool data, water quality, and weather at the pool in real time.
- Easy configuration and maintenance of Blueriiot connected products.
- Tailor-made recommandations to obtain a crystal clear water. The right dosis of the right product, at the right time.
- Smart pool integration for infinite possibilities.

Blueriiot Pool & Spa Assistant compatibility & features

Blue Connect

All types of pools

Cl/Br/Salt

Water quality

Notification when an action is required

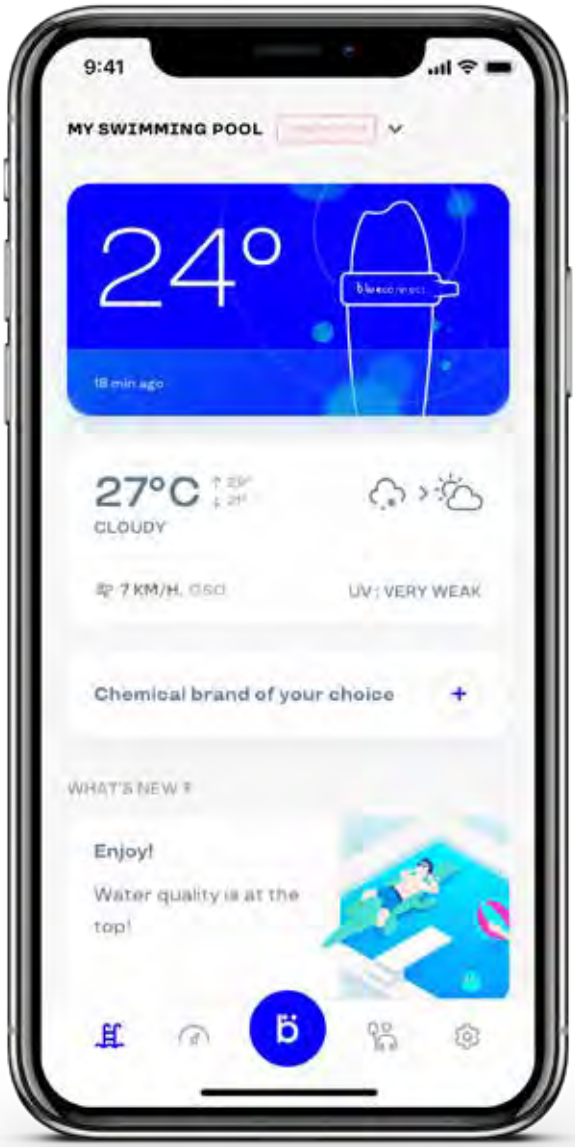

Blue Check

Chemical advices

CTX Professional

ASTRALPOOL

Weather data & forecasts

Promote your shop in the app

Voice assistant integration

amazon alexa Google Assistant

Chemicals compatibility

The users can choose to use Blueriiot Pool & Spa Assistant with a specific product line.
He will benefit from precise and adapted advices to this range of products.

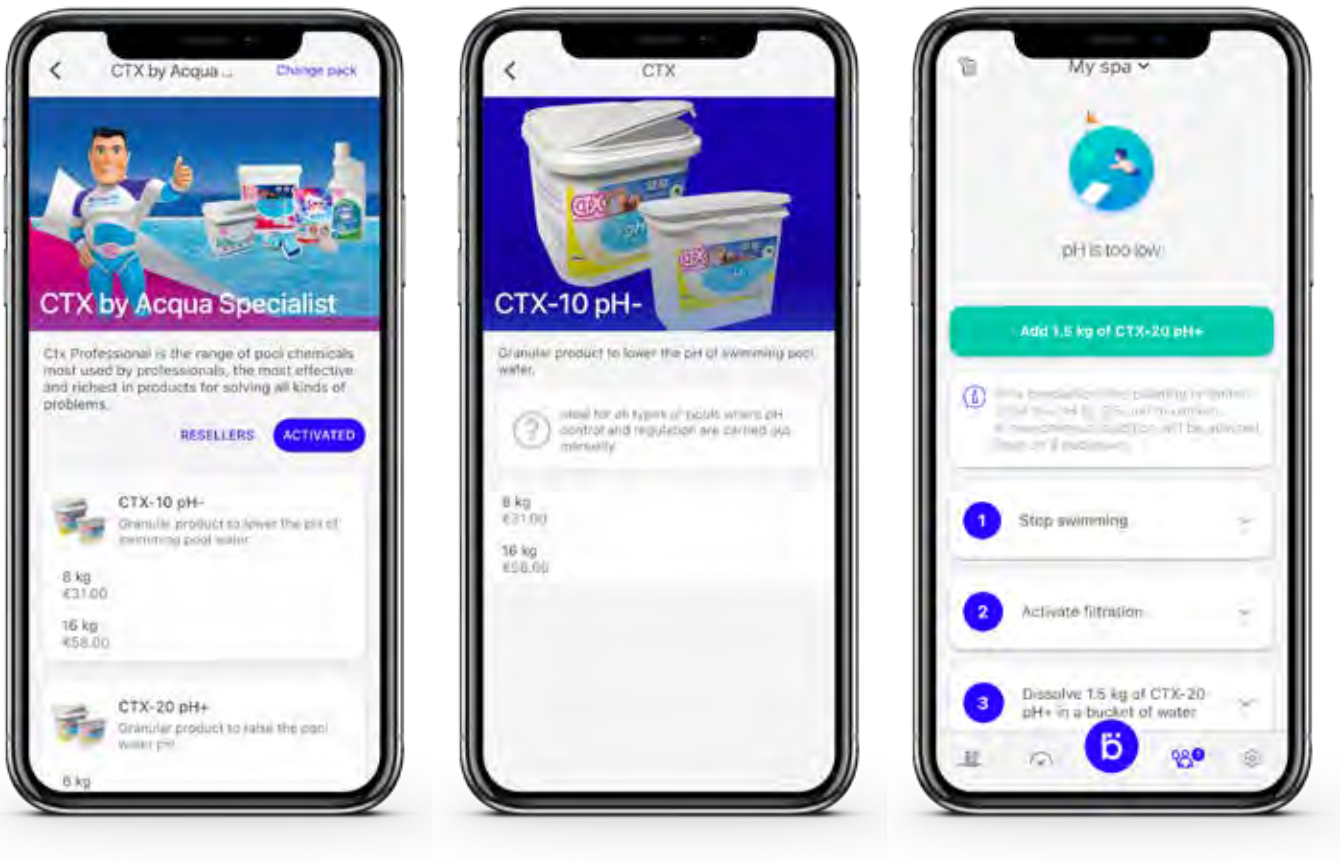

Voice assistant compatibility

Blueriiot Pool & Spa Assistant is compatible with the Amazon Alexa and Google Assistant voice assistants.

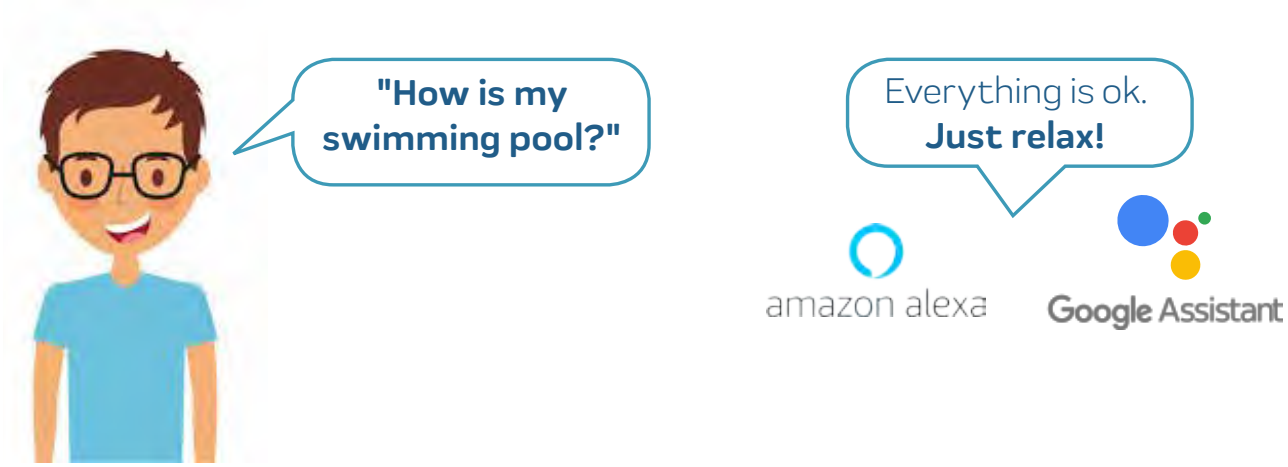

Blue Connect, the smart pool analyser



Blue Connect is a smart device that analyses the quality of the water automatically. Combines with the free app Blueriiot Pool & Spa Assistant, it informs the user how to balance out the pool in easy, straight forward steps!

The device is equipped with an innovative sensor that measures the main parameters to keep a crystal clear water: pH, water temperature, ORP (disinfectant level) and conductivity.

Always connected

Blue Connect is always connected thanks to different technologies:

Sigfox

Blue Connect continuously sends the data to the cloud via a network dedicated to connected devices.

Bluetooth

Blue Connect user can take an instant measure directly with Bluetooth.

Wi-Fi

Blue Connect works with the Wi-Fi network thanks to Extender

Plug & Play

Blue Connect works with **all types of pools** and its installation takes only 3 minutes

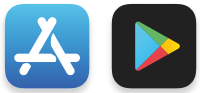

1. Download the App Blueriiot

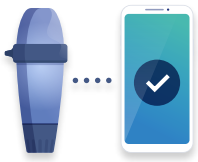

2. Activate Blue Connect

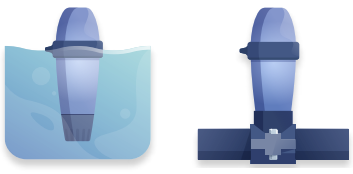

3. Install in the water OR in the technical room (***Blue Fit***)



4. Enjoy

Blue Check, the "smart" test strip



Blue Check is a set of 50 test strips to use with the free application *Blueriiot Pool & Spa Assistant* that analyses the quality of the water by taking measurements manually. The app gives customised advices to maintain the pool. A simple solution to keep the water clean with peace of mind.



Blue Check is a complementary solution of Blue Connect, the smart pool analyser (see p. 204). Thanks to Blue Check, you can ensure that the pool water is in balance by verifying other parameters such as the alkalinity, the hardness and the cyanuric acid. More info p. 204.

EASY TO USE

1
Make the test and enter the strip's values in the app *Blueriiot Pool & Spa Assistant*



2
Access the pool status

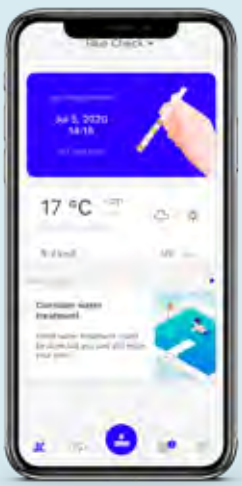

3
Receive custom recipe on which chemicals to use in which quantity



Viirtual Pool Care platform

Web platform dedicated to pool & spa professionals

www.virtualpoolcare.io is a web platform designed specifically for the pool and spa industry. It offers you the tools you need to organize your business, promote your products, services & shops towards Blueriiot users. Viirtual Pool Care is available for computers, tablets or phones.

Pools

Monitor your pool & spa park remotely on the platform *Viirtual Pool Care*

- All your connected pools at first glance.
- Follow live the analyses of your clients' Blue Connect.
- Perform accurate and professional diagnosis.
- Avoid unnecessary travels.
- Anticipate and advise your clients on possible preventive actions.

Easy to use

1. Create a totally free account on www.virtualpoolcare.io
2. Send a sharing request to your customer using the key of the Blue Connect to ask his permission to share the Blue Connect's data
3. As soon as he accepts, you have access to his pool's data.
   You can monitor as many as pools or spas as you want.



Chemical Pack

Blueriiot Pool & Spa Assistant promotes Fluidra and partners chemical brands

- Increase customers loyalty to the products you sale.
- Increase customers confidence with tailor made chemical recommendations.
- Support customers retention.





Vendor Locator

List your shop(s)* in the app *Blueriiot Pool & Spa Assistant*

- Promote your shop very easily to a very targeted audience.
- Generate new leads geographically.
- Your shop listed as the favorite shop and first in the list.

* Ask you Fluidra's sales representative for more information

BLUERIIOT WATER TESTERS

Blue Connect Range - Selection guide

Blue Connect is available in different packs with different functionalities to meet different needs.

	Blue Check	Blue Connect GO	Blue Connect Plus (Gold)
			
PRODUCT CHARACTERISTICS			
Water tester method	Test strips	Smart water analyzer (white color)	Smart water analyzer (blue color)
Analysis method	5-in-1 strips: free chlorine or bromine, pH, total alkalinity, cyanuric acid and total hardness	3-in-1 sensor: water temperature, pH, ORP/Redox	4-in-1 sensor: water temperature, pH, ORP/Redox, conductivity
Type of pool	Pools and spas	Pools and spas	Pools and spas
Disinfection method	Chlorine, Bromine, Salt	Chlorine, Bromine	Chlorine, Bromine, Salt
ACCESSORIES AND SERVICE			
Fit 50	-	Compatible	Included in the pack
Extender	-	Compatible	Compatible
Viirtual Pool Care (Pools acces)	-	-	Included in the pack
CONNECTIVITY			
Bluetooth measurement via the app	-	✓	✓
Remote analysis with Wi-Fi network	-	Upon request (thanks to the Extender accessory)	Automatically (thanks to the Extender accessory)
Up to 20 measurements taken automatically and remotely with Sigfox	-	Subscription required	Included for life
BLUERIIOT POOL & SPA ASSISTANT APP			
Practical guide with chemical advice	✓	✓	✓
Chemical pack of your choice	✓	✓	✓
Value table	✓	✓	✓
Blueriiot Premium	-	Subscription required	Included for life

Blue Connect **Go**

Just follow the guide:

Blue Connect Go provides you with guidelines for the easy maintenance of your pool or spa.

Blue Connect **Plus**

Time to relax!

Blue Connect Plus is the ultimate, subscription-free pack you need for a stress-free experience: because pools should only be fun!

FLUIDRA CONNECT
CONNECT & GO

Available on the iPhone App Store
ANDROID APP ON Google play

The most flexible solution for a smart connected pool

- **1 power center cabinet including the Connect Box** where all pool equipment is wired (available in different versions to suit most pools)
- **2 dedicated Pool Pro remote access portals:**
  - -NN PRO smartphone APP dedicated to easy configuration and remote monitoring of installed pools
  - -Fluidraconnect.com dedicated Web portal to manage all pools at a glance
- **1 dedicated NN enduser app** to manage pool at anytime from anywhere.

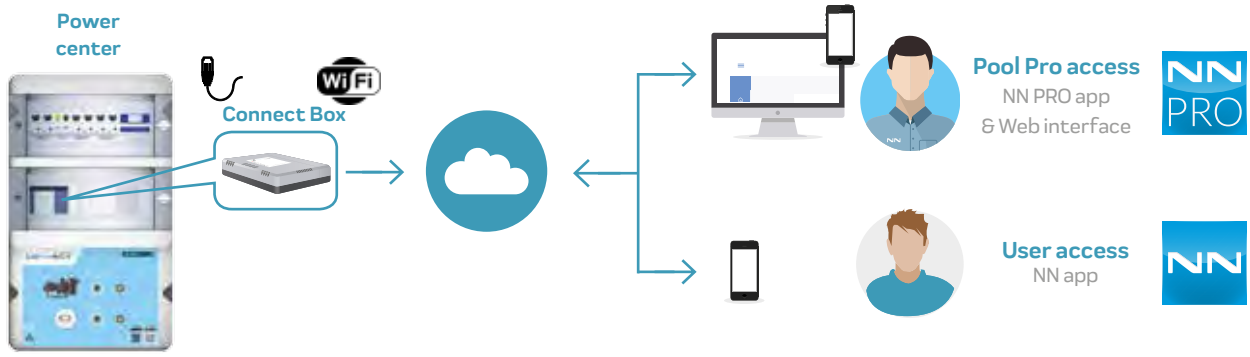

Fluidra Connect & Go power center cabinet

The brain of the pool including all electrical safeties and control switches. Also includes Connect Box linked to the cloud using either Wi-Fi or Enthernet cable.

Fluidra products NN compatible*

Smart control & exchange to allow a perfect pool experience. Plug & Play installation. More than 100 compatible Fluidra products.

Standard products

On/Off & scheduling control of any standard pool equipment on the market.

Modbus products**

Ability to control Modbus products for tailor-made use.

Connect & Go solution

Pre-wired power centers for an easy installation adapted to most pools.

See page 34

* See page 39 for the full list of NN compatible products.

** Upon special request.

FLUIDRA CONNECT®

CONNECT & GO

Fluidra Connect: Pool Professional benefits



Differenciation with Connected Pools.

Better offer and service for the End User.



Fast & Easy installation.

Drastically reduces the installation time thanks to pre-wired power center cabinets (Connect & Go). Easy on-site configuration using NN PRO app.



Savings.

Cut back cost on better time and resource managment. Can save unnecessary trips, petrol costs, toll fees, etc.



Remote maintenance.

Piece of mind for Maintenance Professionals. Preventing and solving problems remotely using Fluidra Connect professional dashboards to see all pools at a glance.

NN PRO professional APP



www.fluidraconnect.com
web portal



Fluidra Connect: Consumer benefits



Peace of mind.

Dedicated user app for a pool always ready to use in the top conditions. Healthy water for you and your family.



Savings.

A connected pool helps to save water, energy and use less chemical products.



Easy control.

Access and control your pool 24/7 from anywhere, at any time.

NN consumer APP



FLUIDRA CONNECT®
CONNECT & GO

Available on the iPhone App Store
ANDROID APP ON Google play

Convenience and easy installation: The smartest connected pool solution



1. 1 professional APP for easy configuration
2. Pre-wired power center cabinets for easy installation
3. Control any pool equipment
4. Advanced management of NN compatible products





NN PRO
Professional APP

- convenient on-site configuration
- pool sites monitoring at a glance



Pre-wired power center cabinets for fast and easy installation

- Plug & Play
- Available in different versions to suit most pools
- Ready to use with all NN compatible products
- Built-in Wi-Fi and Ethernet connectivity

FLUIDRA CONNECT®

CONNECT & GO

Convenience and easy installation: The quickest installation solution for new pools



Once Connect & Go power center cabinet is installed and pool equipment wired to it, simply follow 4 easy steps:

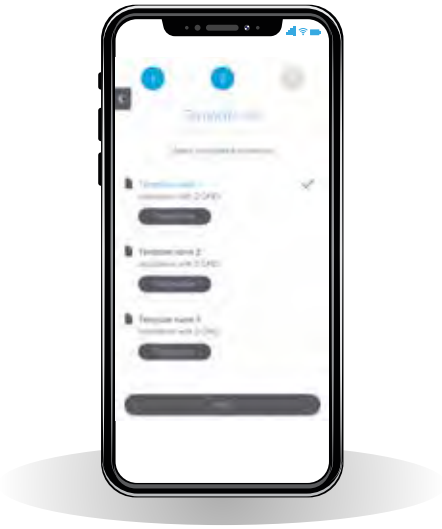

1. Download the NN PRO app and create your professional user account.
2. Scan Connect Box QR code to register the Connect & Go power center cabinet.
3. Scan power center cabinet barcode to get the predefined pool configuration template.
4. Launch NN compatible products auto detection using the app to get the pool dashboard.

- Configuration is complete whitin a very short time
- Pool owner will also be able to access his pol using the NN consumer app



www.fluidraconnect.com

FLUIDRA CONNECT®

CONNECT & GO

Installation Diagram







CONNECT & GO
POWER CENTER CABINET

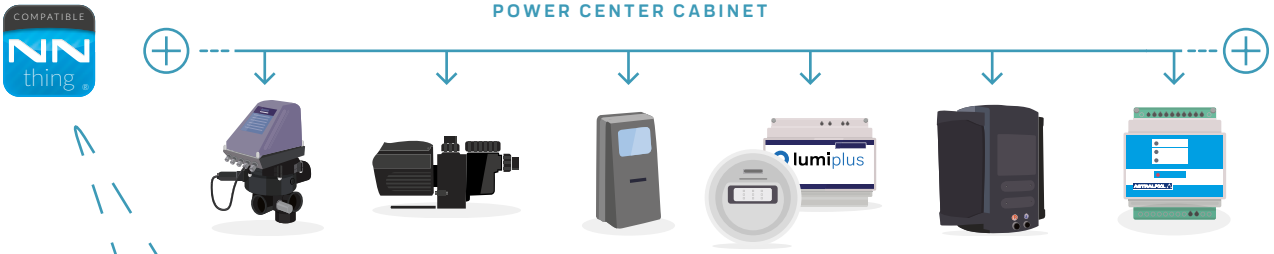

GPIO*

Device with 4 inputs & 4 outputs provided with Connect & Go power center cabinet to manage standard products



More than 100 compatible Fluidra Connect products available

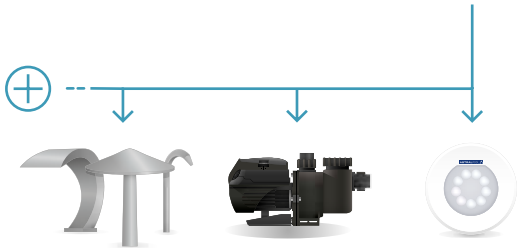

Any standard product can be controlled

* 1 GPIO is installed inside Connect & Go power center cabinets. Additional GPIO can be purchased separately to control more equipment. See code 62368 on page 36.

FLUIDRA CONNECT®

CONNECT & GO

Range map



		Pre-defined templates					
Connect & Go version	**Fluidra code**	**1 pump** (+ on/off button)	**2 pumps** (+ on/off buttons)	**White light** (+ on/off button)	**LumiPlus RGB color light**	**Light Transformer included**	**Extra device** (+ on/off button for standard chlorinator, booster pump, etc...)
Basic	**70874(C) / 70875(D)**	✓		✓			
Basic Plus	**70554(C) / 70555(D)**	✓		✓			✓
Net'N'Clean	**70556(C) / 70557(D)**		✓				✓
Complete White	**70697(C) / 70698(D)**		✓	✓		✓	✓
Complete RGB	**70699(C) / 70700(D)**		✓		✓	✓	✓

FLUIDRA CONNECT
INTERNET OF POOLS

CONNECT & GO PRODUCTS

THE FUTURE IS HERE

Convenience & easy installation

A range of Connect & Go power center cabinets is offered to suit most residential pools configurations.

Connect & Go power center cabinets contain all electrical protections and switches to manage pool equipment. Everything is pre-wired to ease installation process so it is the perfect solution for new pools, while also being adapted to retrofit situation (simply replace the whole cabinet with Connect & Go).

Once installed, simply follow 4 easy steps:

1. Download the NN PRO app and create your professional user account.

2. Scan Connect Box QR code to register the Connect & Go power center cabinet.

3. Scan power center cabinet barcode to get the predefined pool configuration template.

4. Launch NN compatible products auto detection using the app to get the pool dashboard.

Type	Intensity range	Power Range 1-phase 230V
C	4A - 6.3A	¾ HP - 1 HP
D	6A - 10A	1.5 HP



Basic

Control and power devices for a single-phase pump and control devices for lighting.

- IP-65 protection rating. Two transparent lids with lock and key.
- Products compatible with 220/240 V single-phase (P+N+T) 50 Hz/60Hz input.
- Internet connection required.
- Manual (selector) or automatic lighting control and pump.
- Includes Connect Box and 1 GPIO wiring.
- Enables optional temperature sensor connection (code 69682) with no need for accessories.
- Possibility of connecting a levels box.
- External transformer needed for lighting.
- Expansion modules can be connected for white, RGB and GPIO lighting.

	Code	Standard Pack	Standard Weight in kg	Standard Volume in m³
Basic C	**70874**	1	6.00	0.028
Basic D	**70875**	1	6.00	0.028



Basic Plus

Control and power devices for a single-phase pump plus a control device for lighting.

- IP-65 protection rating. Two transparent lids with lock and key.
- Products compatible with 220/240 V single-phase (P+N+T) 50 Hz/60Hz input.
- Internet connection required.
- Manual (selector) or automatic control for lighting, pump and auxiliary devices.
- Includes Connect Box and 1 GPIO wiring.
- Enables optional temperature sensor connection (code 69682) with no need for accessories.
- Possibility of connecting a levels box.
- External transformer needed for lighting.
- Expansion modules can be connected for white, RGB and GPIO lighting.

	Code	Standard Pack	Standard Weight in kg	Standard Volume in m³
Basic Plus C	**70554**	1	6.00	0.028
Basic Plus D	**70555**	1	6.00	0.028

+ info FLUIDRA CONNECT
Further information at
www.fluidraconnect.com

FLUIDRA CONNECT
INTERNET OF POOLS

CONNECT & GO PRODUCTS



Net'N'Clean

Control and power devices for a single-phase pump plus a control another device.

- IP-65 protection rating. Two transparent lids with lock and key.
- Products compatible with 220/240 V single-phase (P+N+T) 50 Hz/60Hz input.
- Internet connection required.
- Manual (selector) or automatic control for pump, an auxiliary pump and an auxiliary device.
- Includes Connect Box and 1 GPIO wiring.
- Enables optional temperature sensor connection (code 69682) with no need for accessories.
- Possibility of connecting a levels box.
- External transformer needed for lighting.
- Expansion modules can be connected for white, RGB and GPIO lighting.

	Code	Standard Pack.	Standard Weight in kg	Standard Volume in m^3
Net'N'Clean C	**70556**	1	6.00	0.028
Net'N'Clean D	**70557**	1	6.00	0.028



Complete White

Control and power devices for two single-phase pump plus a control and power for white lighting.

- IP-65 protection rating. Three transparent lids with lock and key.
- Products compatible with 220/240 V single-phase (P+N+T) 50 Hz/60Hz input.
- Internet connection required.
- Manual (selector) or automatic control for pump, an auxiliary pump, an auxiliary device and lighting.
- Includes Connect Box and 1 GPIO wiring.
- Enables optional temperature sensor connection (code 69682) with no need for accessories.
- Possibility of connecting a levels box.
- A 100 VA transformer is included for lighting.
- Expansion modules can be connected for RGB and GPIO lighting.

	Code	Standard Pack.	Standard Weight in kg	Standard Volume in m^3
Complete White C	**70697**	1	10.0	0.043
Complete White D	**70698**	1	10.0	0.043



Complete RGB

Control and power devices for two single-phase pump plus a control and power for RGB lighting.

- IP-65 protection rating. Three transparent lids with lock and key.
- Products compatible with 220/240 V single-phase (P+N+T) 50 Hz/60Hz input.
- Internet connection required.
- Manual (selector) or automatic control for pump, an auxiliary pump and an auxiliary device.
- Includes Connect Box and 1 GPIO wiring.
- Enables optional temperature sensor connection (code 69682) with no need for accessories.
- Possibility of connecting a levels box.
- A 100 VA transformer is included for lighting.
- Expansion modules can be connected for white and GPIO lighting.

	Code	Standard Pack	Standard Weight in kg	Standard Volume in m^3
Complete RGB C	**70699**	1	10.0	0.043
Complete RGB D	**70700**	1	10.0	0.043

Check out the expansion modules available for GPIO, RGB, etc.

FLUIDRA CONNECT
INTERNET OF POOLS

FLUIDRA CONNECT ACCESSORIES

THE FUTURE IS HERE

While providing a convenient and easy to install solution with Connect & Go pre-wired power center cabinets, it is possible to create tailor-made Fluidra Connect automation for custom applications.

It can be either Fluidra Connect main components to create a custom installation or expansion modules to add features to a Connect & Go power center cabinet.

• Custom installation

The following components are needed as a baseline (to be integrated in a specific power center cabinet - not provided):

- Connect Box which is the "brain" of Fluidra Connect automation.

- One or several GPIO control device(s) that will manage pool equipment.

• Expansion modules

6 expansion modules are offered to bring additional features to Connect & Go power center cabinets:

- 3 modules to add 2 filter pumps control (available for 1, 2 & 3 HP pumps).

- 2 modules to add lighting management (available in white or RGB color with 100 VA transformer).

- 1 module to get an additional GPIO for pool equipmeent management.



Connect Box

Connect Box is the brains behind a Fluidra Connect pool installation. Fluidra Connect does not work without Connect Box, which must have a cable or Wi-Fi Internet connection (from a home router, 3G network, etc.).

	Code	Standard Pack	Standard Weight in kg	Standard Volume in m³
Connect Box	**66671**	1	0.42	0.0010

In cases that the products to be controlled are not compatible with Fluidra Connect, they can be run using a device called a GPIO.



GPIO

Control device with 4 digital inputs and 4 digital outputs.

Using the GPIO, incompatible products, such as a white spotlight or filtration pump, can be switched on or off and their timers set.

It also displays the status of some devices, such as a pool cover.

	Code	Standard Pack	Standard Weight in kg	Standard Volume in m³
GPIO	**62368**	1	0.18	0.0003

Up to 247 GPIOs can be connected to a single Connect Box.

+ info FLUIDRA CONNECT

Further information at **www.fluidraconnect.com**

FLUIDRA CONNECT
INTERNET OF POOLS

FLUIDRA CONNECT ACCESSORIES



Expansion modules - 2 auxiliary pumps

Those expansion modules allow to add ON-OFF-AUTO control of 2 additional pumps.
Available in 3 versions for 1, 2 or 3 HP pumps (single phase).

	Code	Standard Pack.	Standard Weight in kg	Standard Volume in m³
Expansion module - 2 pumps 1 HP	**72731**	1	3.00	0.028
Expansion module - 2 pumps 2 HP	**72732**	1	3.00	0.028
Expansion module - 2 pumps 3 HP	**72733**	1	3.00	0.028



Expansion modules - White & RGB lighting

Those expansion modules allow to add Lighting supply and control.
Provided with a 100 VA transformer.
Available in 2 versions: white light and RGB color light (NN compatible)

	Code	Standard Pack.	Standard Weight in kg	Standard Volume in m³
Expansion module - white light	**70695**	1	1.50	0.009
Expansion module - RGB color light	**70696**	1	1.50	0.009



Expansion module - GPIO

This expansion module allows to add a GPIO device that brings 4 digital inputs and 4 digital outputs in addition to existing GPIO in Connect & Go cabinets.
Any standard product can be managed with ON, OFF and schedule controls or device status (such as pool cover for example).

	Code	Standard Pack.	Standard Weight in kg	Standard Volume in m³
Expansion module - GPIO	**70770**	1	3.00	0.020

FLUIDRA CONNECT
INTERNET OF POOLS

FLUIDRA CONNECT ACCESSORIES

Fluidra Connect accessories

	Code	Standard Pack	Standard Weight in kg	Standard Volume in m^3
230 VAC opto-isolator	**66395**	1	-	-
24 VAC opto-isolator	**66396**	1	-	-
Switch - 5 ports	**66390***	1	-	-
Power Line Communications - 2 ports	**66391***	1	-	-
Indoor Wi-Fi access point	**66392***	1	-	-
Outdoor router	**66393***	1	-	-
Portable router	**66394***	1	-	-
3G router (requires SIM card)	**67297***	1	-	-
3G router for DIN rail (requires SIM card)	**67298***	1	-	-
SEM1 single-phase meter with transformer	**68441**	1	-	-
SEM3 single-phase meter with 3 transformers	**68442**	1	-	-
Bridge Modbus TCP/RTU	**68168**	1	-	-
Modbus temperature sensor kit	**69682**	1	-	-

* Available while stock lasts.



66395 - 66396



66390



66391



66392



66393



66394



67297



68441-68442



68168

FLUIDRA CONNECT
INTERNET OF POOLS

FLUIDRA PRODUCTS NN COMPATIBLE

All product platforms below are NN compatible to allow a smart control & exchange with Fluidra Connect and associated smartphone apps and website.

User(s) can see more operating data and be able to access to more settings compared to standard products.

NN is the acronym used to name the Fluidra Connect apps that are available on both iOS (Apple®) and aOS (Android™) platforms and describe smart compatible products.

"NN" icon indicates the Consumer app.

"NN PRO" icon indicates the Professional app.

"NN thing" icon is used to highlight our "NN compatible" products that can be controlled with Fluidra Connect automation, bringing advanced features to user.

Water Treatment Equipment






	Automatic regulations & dosing			
	Control Connect	**Dual pH-EV Basic Control Plus**	**Control Basic Plus**	**Redox Basic EV Plus**
More info on page	224	226	225	225






	Dosing Pumps	Salt Water Chlorinators and Hybrid systems		
	Optima Plus	**Elite Connect**	**Smart Next**	**Neolysis S* Neolysis LS***
More info on page	229	216	217	220

* Use of a NN comunication kit (code 60363) is required.

FLUIDRA CONNECT
INTERNET OF POOLS

FLUIDRA PRODUCTS NN COMPATIBLE

Filtration

		
	Variable Speed pump	Automatic multiport valve
	Victoria Plus Silent VS	**VRAC III automatic valve**
More info on page	173	165

Heating & Dehumidifiers

				
	Heat pumps			
	AstralPool Heat III	**ProElyo Touch**	**Evoline**	**ProHeat II**
More info on page	434	435	436	437

Heating & Dehumidifiers

	
	Electric heaters
	Compact ElectricHeat
More info on page	441

FLUIDRA CONNECT INTERNET OF POOLS

FLUIDRA PRODUCTS NN COMPATIBLE

Lighting



	LumiPlus LED lighting			
	FlexiNiche V2 & V1 RGB	**FlexiSlim V2 & V1 RGB**	**FlexiRapid V2 & V1 RGB**	**Design RGB**
More info on page	252	252	252	257



	LumiPlus LED lighting		
	Mini V2 RGB	**Mini V3 RGB**	**Micro RGB**
More info on page	260	259	261

LumiPlus RGB LED lights are NN compatible when used in the following combinations :

- **Wired to a Fluidra Connect & Go power center cabinet including LumiPlus RGB LED control (model Complete RGB, codes 70699 & 70700).**
- **Wired to a LumiPlus Modbus device (code 57434) on an existing installation already containing a LumiPlus modulator (code 27818).**
- **Wired to a LumiPlus Modbus device + LumiPlus modulator (code 57435) on a new installation.**





POOL SURROUND EQUIPMENT

44 • Pool access - Elegance ladders
44 • Pool access - Komfi ladders
45 • Pool access - Wall model ladders
46 • Pool access - Standard model ladders
47 • Pool access - Mixed model ladders
48 • Pool access - Asymmetrical and easy access ladders
50 • Pool access - Exit grab rails and lower end
51 • Pool access - Accessories, anchoring fixtures and grips
53 • Diving boards and trampolines
54 • Platforms
54 • Slides
56 • Pluvium showers
57 • Iguazu showers
58 • Showers - Solar showers
61 • Showers - Showers with timers
62 • Showers - Accessories
63 • Showers - Shower trays
63 • AstralPool Bike
64 • Ornamental water features - Cannons and waterfalls
67 • Grilles for overflow

+ info PDB Product Database
Further information on **PRODUCTS**
www.astralpool.com

POOL ACCESS - ELEGANCE LADDERS



Complies with Standard
EN 16582-1:2015

Elegance ladders

These sleek, stylish ladders with handrails have been designed to make it easy to get into a pool. Made of AISI 316L stainless steel with two anchoring points, the first step is double the standard size in a non-slip material for the greater safety and convenience of swimmers. Comes with 3 or 4 steps. To connect ground earth cable use Equipotential Anchor items 73318 or 73319.

	Code	Standard Pack	Standard Weight in kg	Standard Volume in m^3
Elegance ladders				
2 steps + 1 safety step	**45782**	1	14	0.089
3 steps + 1 safety step	**45783**	1	15	0.089

Code	Steps	A	B
45782	**2 + 1 safety**	960	2430
45783	**3 + 1 safety**	1220	2690

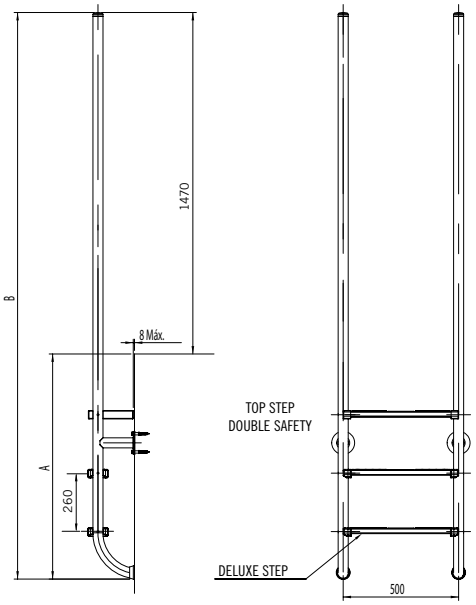

POOL ACCESS - KOMFI LADDERS



Complies with Standard
EN 16582-1:2015

Komfi ladders

Standard Ladder grey step
Ladder with handrails manufactured in Ø43 and polished AISI-316L stainless steel tube.
Polypropylene steps. Its plastic steps ensure a comfortable tread when the user steps on. It also avoids the possibility of slipping.

Material: Stainless Steel AISI 316L polished handrail + polypropylene steps

Dimensions: based on Standard ladders for Residential use.

	Code	Standard Pack	Standard Weight in kg	Standard Volume in m^3
2 steps	**73147**	1	9.8	0.066
3 steps	**73148**	1	13	0.076
4 steps	**73149**	1	14	0.086
5 steps	**73150**	1	15	0.097

* 1 additional year warranty. For more information see the warranty certificate in the manual.

POOL ACCESS - WALL MODEL LADDERS



Complies with Standard
EN 16582-1:2015

In-ground pool ladder. Stainless steel Ø 43 mm pipe handrail. Stainless steel steps. Special non-slip design ensures safety. Supplied with anchoring fixtures for connection to an equipotential outlet. Trimmed faceplate.

Steps	A	B	C	D	E	F
2	318	620	260	700	148	500
3	318	620	260	960	148	500
4	318	620	260	1220	148	500
5	318	620	260	1480	148	500

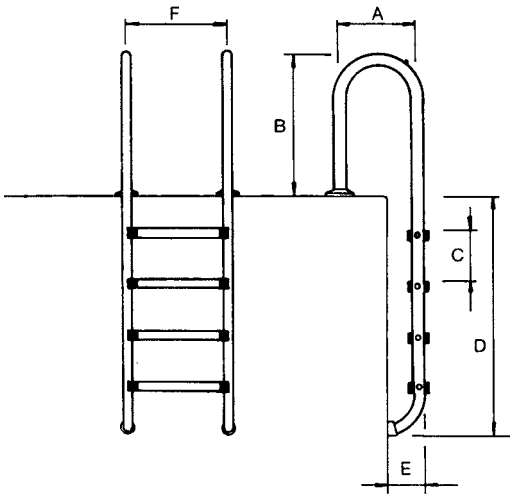

Wall model ladder with Luxe model steps



Rails & steps in AISI-316L.

	Code	Standard Pack	Standard Weight in kg	Standard Volume in m^3
2 steps ladder	**05480**	1	9.0	0.05
3 steps ladder	**05481**	1	10.5	0.06
4 steps ladder	**05482**	1	12.4	0.06
5 steps ladder	**05483**	1	13.7	0.07

Wall model ladder with Standard model steps



Rails & steps in AISI-304L.

	Code	Standard Pack	Standard Weight in kg	Standard Volume in m^3
2 steps ladder	**05492**	1	9.0	0.05
3 steps ladder	**05493**	1	12.7	0.06
4 steps ladder	**05494**	1	14.8	0.06
5 steps ladder	**05495**	1	13.6	0.07

* 1 additional year warranty. For more information see the warranty certificate in the manual.

+ info PDB Product Database
Further information on **PRODUCTS**
www.astralpool.com

POOL ACCESS - STANDARD MODEL LADDERS



Complies with Standard
EN 16582-1:2015

In-ground pool ladder. Stainless steel Ø 43 mm pipe handrail. Stainless steel steps. Special non-slip design ensures safety. Supplied with anchoring fixtures for connection to an equipotential outlet. Trimmed faceplate.

Steps	A	B	C	D	E	F
2	618	620	260	700	148	500
3	618	620	260	960	148	500
4	618	620	260	1220	148	500
5	618	620	260	1480	148	500

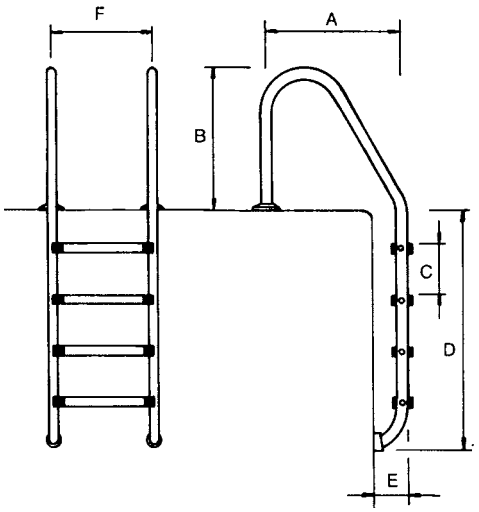

Optional: American measurements without anchor point and optional plastic step.



Standard handrail ladder with Luxe model step

GARANTÍA 3 AÑOS YEARS GUARANTEE *

Rails & steps in AISI-316L.

	Code	Standard Pack	Standard Weight in kg	Standard Volume in m³
2 steps ladder	**05476**	1	9.8	0.07
3 steps ladder	**05477**	1	11.5	0.08
4 steps ladder	**05478**	1	14.0	0.08
5 steps ladder	**05479**	1	15.0	0.10



Standard handrail ladder with Standard model step

Rails & steps in AISI-304L.

	Code	Standard Pack	Standard Weight in kg	Standard Volume in m³
2 steps ladder	**05488**	1	9.6	0.07
3 steps ladder	**05489**	1	12.0	0.08
4 steps ladder	**05490**	1	15.0	0.09
5 steps ladder	**05491**	1	15.0	0.09

* 1 additional year warranty. For more information see the warranty certificate in the manual.

POOL ACCESS - MIXED MODEL LADDERS



Complies with Standard
EN 16582-1:2015

In-ground pool ladder. Stainless steel Ø 43 mm pipe handrail. Stainless steel steps. Special non-slip design ensures safety. Supplied with anchoring fixtures for connection to an equipotential outlet. Trimmed faceplate.

Steps	A	B	C	D	E	F	G
2	318	620	260	700	148	500	491
3	318	620	260	960	148	500	491
4	318	620	260	1220	148	500	491
5	318	620	260	1480	148	500	491

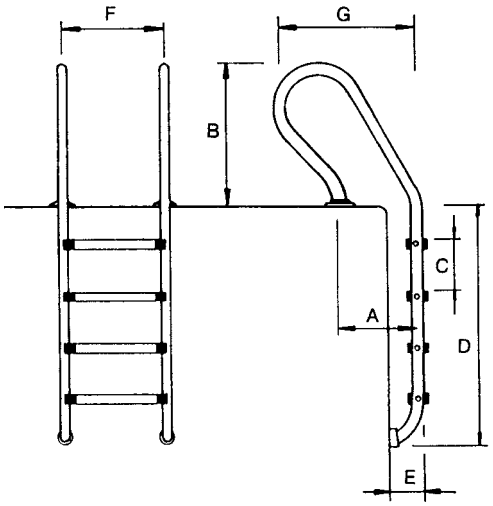



Mixed handrail ladder with Luxe model step

Rails & steps in AISI-316L.

	Code	Standard Pack	Standard Weight in kg	Standard Volume in m³
2 steps ladder	**05484**	1	9.7	0.07
3 steps ladder	**05485**	1	11.5	0.08
4 steps ladder	**05486**	1	12.6	0.09
5 steps ladder	**05487**	1	14.8	0.09



Mixed handrail ladder with Standard model step

Rails & steps in AISI-304L.

	Code	Standard Pack	Standard Weight in kg	Standard Volume in m³
2 steps ladder	**05496**	1	9.7	0.07
3 steps ladder	**05497**	1	11.4	0.08
4 steps ladder	**05498**	1	15.3	0.09
5 steps ladder	**05499**	1	14.8	0.10

* 1 additional year warranty. For more information see the warranty certificate in the manual.

+ info
PDB Product Database
Further information on **PRODUCTS**
www.astralpool.com

POOL ACCESS - ASYMMETRICAL AND EASY ACCESS LADDERS



Complies with Standards
EN 13451-1
EN 13451-2

Standard asymmetrical model

Standard model ladder for embedded pools. Handrails in polished Stainless Steel (Ø 43 mm) pipe. Stainless steel steps with non-slip surface. Its careful design helps to reduce the danger of slips or cuts. Complete with anchoring fixtures and earthing connection. Rails & steps in AISI-316L.

	Code	Standard Pack	Standard Weight in kg	Standard Volume in m³
1 "Luxe" step + 1 double safety step	**19938**	1	13.0	0.07
2 "Luxe" steps + 1 double safety step	**19939**	1	13.9	0.08
3 "Luxe" steps + 1 double safety step	**19940**	1	15.8	0.10
4 "Luxe" steps + 1 double safety step	**19941**	1	17.0	0.10

Code	Steps	A	B
19938	2	1450	700
19939	3	1710	960
19940	4	1970	1220
19941	5	2230	1480

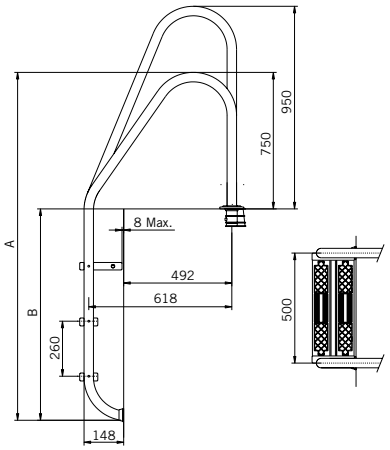



Complies with Standards
EN 13451-1
EN 13451-2

Mixed asymmetric model

Stairs with Mixed model handrails, for embedded pools, made of polished Stainless Steel (Ø 43 mm) pipe. Its careful design helps to reduce the danger of slips or cuts. Complete with anchoring fixtures and earthing connection. LUXE handrails and steps in AISI-316L.

	Code	Standard Pack	Standard Weight in kg	Standard Volume in m³
2 "Luxe" steps + 1 double safety step	**19943**	1	14.0	0.08
3 "Luxe" steps + 1 double safety step	**19944**	1	15.6	0.09
4 "Luxe" steps + 1 double safety step	**19945**	1	17.5	0.10

Code	Steps	A	B
19943	3	1710	960
19944	4	1970	1220
19945	5	2230	1480

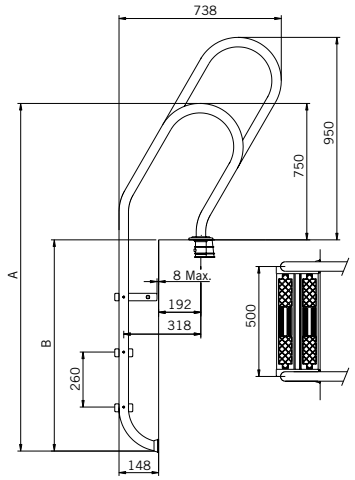

POOL ACCESS - ASYMMETRICAL AND EASY ACCESS LADDERS



Easy access model

Ladder width of 500 mm. Handrails in polished stainless steel (Ø 43 mm) pipe. With anchoring fixtures and earthing connection. Polished finish. With anchoring fixtures for earth connection. Rails and non-slip steps in polished AISI-316L.

	Code	Pack. Standard	Weight kg Standard	Volume in m^3 Standard
3-step ladder	**07782**	1	21.6	0.145
4-step ladder	**11979**	1	25.9	0.202

Code	Steps	A	B	C	D	E	F
07782	3	1835	750	260	243	490	500
11979	4	2085	750	260	243	490	500

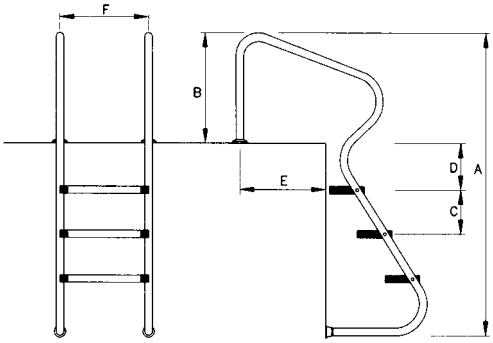



Above-ground pool safety ladder with platform

Ladder manufactured in AISI-304L stainless steel Ø43 pipe with a bright satin finish and plastic treads. White steps and plastic platform. Non-slip steps and platform. Safe pool access. Ladder maximum load: 150 kg.

	Code	Standard Pack	Standard Weight in kg	Standard Volume in m^3
For above-ground pool height				
1 m	**67656**	1	-	-
1.20 or 1.35 m	**67657**	1	-	-
1,50 m	**67658**	1	-	-

Complies with Standard
EN 16582-1:2015

Code	Steps	A	B	C	D	E	F	G	H	I	J	K
67656	3	1856	1204	400	317	1000	400	317	1433	344	506	797
67657	4	2094	1442	350	285	1350	350	285	1644	344	506	808
67658	5	2378	1727	350	285	1500	350	285	1899	344	506	805

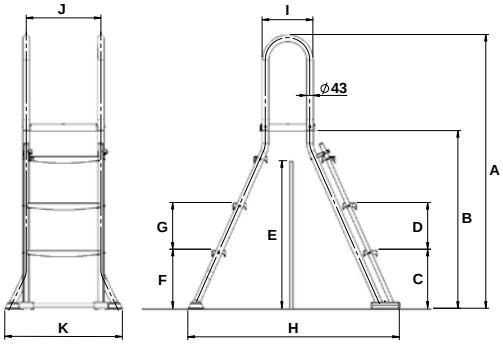

+ info PDB Product Database
Further information on **PRODUCTS**
www.astralpool.com

POOL ACCESS - EXIT GRAB RAILS AND LOWER END



800 x 800 mm model

Set of 2 tubular handrails in polished S.S. AISI-316L Ø 43 mm pipe. Exit grab rails with fixing plates are supplied as a pair including fixing plates, gaskets, screws and wall plugs.

	Code	Standard Pack	Standard Weight in kg	Standard Volume in m³
Attachment by means of fixing plate	**05541**	1	9.27	0.10
Attachment for embedding	**05540**	1	8.40	0.10



470 x 800 mm model

Set of 2 tubular handrails in polished S.S. AISI-316L Ø 43 mm pipe. Exit grab rails with fixing plates are supplied as a pair including fixing plates, gaskets, screws and wall plugs.

	Code	Standard Pack	Standard Weight in kg	Standard Volume in m³
Attachment by means of fixing plate	**05542**	1	6.97	0.08



470 x 800 mm model with rectangular base plate

Set of 2 tubular handrails in polished S.S. AISI-316L Ø 43 mm pipe. The exit grab rails with base plates are supplied with screws and wall plugs.

	Code	Standard Pack	Standard Weight in kg	Standard Volume in m³
Attachment by means of fixing plate	**05543**	1	7.6	0.08



Crossover model with rectangular base plate

Set of 2 tubular handrails in polished S.S. AISI-316L Ø 43 mm pipe. The exit grab rails with base plates are supplied with wall plugs and screws.

	Code	Standard Pack	Standard Weight in kg	Standard Volume in m³
Attachment by means of fixing plate	**05544**	1	8.46	0.18



Parallel model

Set of 2 x AISI-316L bright satin stainless steel Ø 43 mm pipe handrails. For fastening with anchoring fixtures code 00143 (not included in supply, see page 52).

	Code	Standard Pack	Standard Weight in kg	Standard Volume in m³
Parallel model	**00110**	1	10.0	0.11



Asymmetrical model

Set of 2 tubular handrails in polished S.S. AISI-316L Ø 43 mm pipe. For fixing with anchoring fixture code 00143 (not included).

	Code	Standard Pack	Standard Weight in kg	Standard Volume in m³
Asymmetrical model	**00111**	1	10.1	0.14

Ladders and grab rails made to measure
Any types of ladders, grab rails and handrails can be made to order out of AISI-304L and AISI-316L stainless steel adapted to your needs.

POOL ACCESS - EXIT GRAB RAILS AND LOWER END



Complies with Standard
EN 16582-1:2015

Split ladder - Bottom half

Rails and steps in polished AISI-316L stainless steel (Ø 43 mm). Attachment with fixing plates, gaskets, screws and wall plugs. To connect ground earth cable use Equipotential Anchor items 73318 or 73319.

	Code	Standard Pack	Standard Weight in kg	Standard Volume in m³
2 "Luxe" steps	**01456**	1	5.0	0.04
3 "Luxe" steps	**01457**	1	6.3	0.04
4 "Luxe" steps	**01458**	1	7.7	0.05
5 "Luxe" steps	**01459**	1	9.2	0.07



Complies with Standard
EN 13451-1
EN 13451-2

Grab rail fixed out of the water

In polished AISI-316L stainless steel (Ø 43 mm).

	Code	Standard Pack	Standard Weight in kg	Standard Volume in m³
For embedding	**07780**	1	6.7	0.118
With base plates (gaskets, wall plugs and screws)	**07781**	1	6.7	0.118

POOL ACCESS - ACCESSORIES, ANCHORING FIXTURES AND GRIPS



Double non-slip safety step

AISI-316L stainless steel with bright satin finish. For all in-ground pool ladder models.

	Code	Standard Pack	Standard Weight in kg	Standard Volume in m³
Safety step	**70662**	1	2.05	0.003



Anchoring sockets

In plastic, with connection to an equipotential circuit.

	Code	Standard Pack	Standard Weight in kg	Standard Volume in m³
For Ø 43 mm pipe.	**00042**	50	7.0	0.03
For Ø 48 mm pipe.	**07661**	-	-	-



00043 **08727**

Articulated anchoring sockets

In polished Stainless Steel (AISI-304L) for a ladder with a Ø 43 mm pipe.

	Code	Standard Pack	Standard Weight in kg	Standard Volume in m³
Articulated anchoring socket without base plate	**00043**	1	0.93	0.002
Articulated anchoring socket with base plate	**08727**	1	1.0	0.002

* 1 additional year warranty. For more information see the warranty certificate in the manual.

+ info PDB Product Database
Further information on **PRODUCTS**
www.astralpool.com

POOL ACCESS - ACCESSORIES, ANCHORING FIXTURES AND GRIPS



Removable anchoring socket with base plate

In polished stainless steel (AISI-316L) for a Ø 43 mm pipe with gaskets, wall plugs and screws.

	Code	Standard Pack	Standard Weight in kg	Standard Volume in m³
Set of 2 units	**07331**	1	1.00	0.003



Anchor with locking bolts

Made of polished AISI-316L stainless steel. For a Ø 43 mm pipe.

	Code	Standard Pack	Standard Weight in kg	Standard Volume in m³
Anchoring sockets	**00143**	2	1.2	0.003



Ladder foot pad

Made of plastic, the angle can be adjusted by rotating the eye ball socket. Recommended for liner pools.

	Code	Standard Pack	Standard Weight in kg	Standard Volume in m³
For Ø 43 mm pipe.	**00045**	50	12.6	0.03
For Ø 28 mm pipes.	**00046**	50	14.0	0.03



Stainless Steel Handrails

Polished Ø 43 mm AISI-316L stainless steel pipes. With fixing plates (including gaskets, screws and wall plugs).

	Code	Standard Pack	Standard Weight in kg	Standard Volume in m³
Length 0.5 m	**00051**	2	2.8	0.02
Length 1 m	**00052**	2	4.3	0.04
Length 2 m	**00053**	2	7.9	0.09
Length 2.5 m	**00054**	2	9.5	0.11



Tee bar

Polished Ø 43 mm AISI-316L stainless steel pipes.

	Code	Standard Pack	Standard Weight in kg	Standard Volume in m³
With fixing plates (including gaskets, screws and wall plugs).	**00056**	1	2.09	0.01



Equipotential anchor

New

The aim of this accessory for ladders is to solve the problem of not having the possibility to connect ground earth cable to ladders that do not have an anchoring on the pool beach like: Elegance and split ladders - items 45782, 45783, 01456, 01457, 01458, 01459, 08090, 08091 and 08092.

It is mandatory by norms to connect metallic ladders to ground earth in order to have proper electrical connections. Moreover, it is highly recommended to avoid corrosion.

Equipotential anchor for ladders, manufactured in AISI-304L stainless steel and commercialized for concrete and liner pools. The anchors are composed of a recessed base on the ground, washer, screws and the equipotential bonding.

Each ladder needs to 2 units.

	Code	Standard Pack	Standard Weight in kg	Standard Volume in m³
Concrete pools	**73318**	1	0.45	0.002
Liner pools	**73319**	1	0.50	0.002

DIVING BOARDS AND TRAMPOLINES



Dynamic flexible springboard

Wide springboard made of polyester resin and fibreglass. Resistant to UV exposure and adverse weather conditions. Non-slip surface covering the entire board. Supplied with anchoring fixtures.

	Code	Standard Pack	Standard Weight in kg	Standard Volume in m^3
Length 1.61 m. Width 0.46 m	**21392**	1	22.0	0.335



Dynamic 1200 Diving Board

Wide springboard made of polyester resin and fibreglass. Resistant to UV exposure and adverse weather conditions. Non-slip surface covering the entire board. Supplied with anchoring fixtures.

	Code	Standard Pack	Standard Weight in kg	Standard Volume in m^3
Length 1.20 m. Width 0.40 m	**20090**	1	20.0	0.325



Dynamic Diving Board

Wide springboard made of polyester resin and fibreglass, with non-slip surface. Grab rails and supports made of stainless steel with matt finish. Supplied with anchoring fixtures.

	Code	Standard Pack	Standard Weight in kg	Standard Volume in m^3
Length 2 m, Width 0.60 m	**23199**	1	50.0	1.585
Length 2.30 m, Width 0.60 m	**23200**	1	52.0	1.585

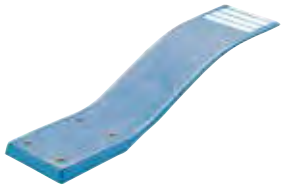

Dolphin Model

Flexible Polyester and fibreglass springboard in light blue. Supplied with anchoring fixtures.

	Code	Standard Pack	Standard Weight in kg	Standard Volume in m^3
Length 1.6 m. Height 0.35 m	**00076**	1	22.0	0.138

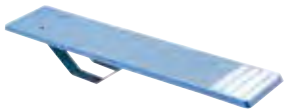

Ballesta Model

Light blue Polyester and fibreglass springboard. Springboard bracket made of galvanized Steel. Supplied with anchoring fixtures.

	Code	Standard Pack	Standard Weight in kg	Standard Volume in m^3
Length 1.8 m, Height 0.25 m, Width 0.4 m	**00077**	1	27.0	0.084
Length 1.4 m, Height 0.25 m, Width 0.4 m	**00078**	1	25.0	0.072



Elevated Model

Base laminated in ivory-coloured Polyester and fibreglass, with light blue board. With 2 stainless steel handrails. Non-slip step and board. Supplied with anchoring fixtures.

	Code	Standard Pack	Standard Weight in kg	Standard Volume in m^3
Length 2 m Height 0.55 m Width 0.4 m	**00068**	1	38.0	0.850
Length 2.5 m Height 0.75 m Width 0.46 m	**00069**	1	68.0	1.380

+ info PDB Product Database
Further information on **PRODUCTS**
www.astralpool.com

PLATFORMS

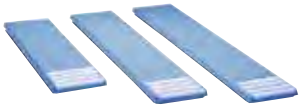

Platform

Light blue polyester and fibreglass boards with non-slip surface. Anchoring fixtures are not supplied.

	Code	Standard Pack	Standard Weight in kg	Standard Volume in m^3
Width 0.40 m				
Length 1.4 m	**00060**	1	13.0	0.036
Length 1.8 m	**00061**	1	16.0	0.046
Length 2.0 m	**00062**	1	18.0	0.050
Length 2.3 m	**00063**	1	22.0	0.060
Width 0.46 m				
Length 2.5 m	**00064**	1	31.0	0.080
Length 3.2 m	**00065**	1	46.0	0.100



Diving board brackets

Made of polished AISI-304L stainless steel, with platform fixing bolts.

	Code	Standard Pack	Standard Weight in kg	Standard Volume in m^3
For boards up to 2.30 m in length	**14586**	1	8.0	0.040
For boards from 2.5 to 3.2 m in length	**72594**	1	8.4	0.102

SLIDES



Pranaslide Model

Light blue polyester and fibreglass steps and slide. Grab rails made of white painted Aluminium. Fitted with a water supply connection to ease sliding. Supplied with anchoring fixtures.

	Code	Standard Pack	Standard Weight in kg	Standard Volume in m^3
Height 1.50 m	**00085**	1	62.0	1.214
Height 1.80 m	**00086**	1	70.0	1.368



Curved model

Light blue polyester and fibreglass steps and slide. Grab rails made of white painted Aluminium. Fitted with a water supply connection to ease sliding. Supplied with anchoring fixtures.

	Code	Standard Pack	Standard Weight in kg	Standard Volume in m^3
Right curve, height 1.78 m	**00088**	1	83.0	2.913
Left curve, height 1.78 m	**00089**	1	83.0	2.913

SLIDES



Straight model

Light blue polyester and fibreglass slide. Plastic steps. Polished stainless steel handrails. Fitted with a water supply connection to ease sliding. Supplied with anchoring fixtures.

	Code	Standard Pack	Standard Weight in kg	Standard Volume in m^3
Height 1.30 m	**00081**	1	31.0	0.550
Height 1.80 m	**00082**	1	38.0	0.850
Height 2.00 m	**00083**	1	44.0	0.750



Slides

Slide made of polyester, reinforced with fibreglass. Plastic steps. Stainless steel handrails. Fitted with a water supply connection to ease sliding. Supplied with anchoring fixtures. Available in white, blue and ivory.

	Code	Standard Pack	Standard Weight in kg	Standard Volume in m^3
Straight	**18543 MT07**	1	-	6.48
Left curve	**18545 MT07**	1	-	8.30



Typhoon Model

Rotomolded slides with “easy grab” handrails and an enclosed non-slip ladder to ensure safe use. They are compatible with Salt Chlorination systems as indicated by the "Salt Pool Approved" label. Fitted with a water supply connection to ease sliding. Height 2.10 metres. Colour available: Sandstone.

	Code	Standard Pack	Standard Weight in kg	Standard Volume in m^3
Typhoon Model	**52253**	1	61	-

Available colours:





Cyclone Model

Rotomolded slides with “easy grab” handrails and an enclosed non-slip ladder to ensure safe use. They are compatible with Salt Chlorination systems as indicated by the "Salt Pool Approved" label. Fitted with a water supply connection to ease sliding. Height 2.10 metres. Colour available: Sandstone.

	Code	Standard Pack	Standard Weight in kg	Standard Volume in m^3
Cyclone Model	**52254**	1	115	-

Available colours:

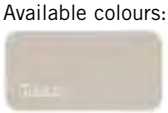

+ info PDB Product Database
Further information on **PRODUCTS**
www.astralpool.com

PLUVIUM SHOWERS



Pluvium shower

Shower made of tropical wood combined with glossy AISI-316L stainless steel. Mixer valve for hot and cold water control. Adjustable shower head with anti-limescale system. Its minimalist and compact design provides an elegant and modern image for the pool environment and its high quality materials give it a long service life and greater resistance to weathering and corrosion.
Height of the shower head from the ground: 2.04 m.

	Code	Standard Pack	Standard Weight in kg	Standard Volume in m^3
Pluvium Shower with shower tray	**43583**	1	38	0.169
Pluvium Shower without shower tray	**43432**	1	27	0.136



SHOWERHEAD



MIXER TAP



Pluvium solar shower

Solar shower made of tropical wood combined with glossy AISI-316L stainless steel. It includes a 30 L aluminium tank. Mixer valve for hot and cold water control. Adjustable shower head with anti-limescale system. Its minimalist and compact design provides an elegant and modern image for the pool environment and its high quality materials give it a long service life and greater resistance to weathering and corrosion. Height of the shower head from the ground: 2.04 m.

	Code	Standard Pack	Standard Weight in kg	Standard Volume in m^3
Pluvium Solar Shower without shower tray	**43435**	1	37	0.225



Shower tray for Pluvium shower

Shower tray for the Pluvium shower made of a combination of wood and glossy AISI-316L stainless steel. Its minimalist and compact design provides an elegant and modern image for the pool environment.

	Code	Standard Pack	Standard Weight in kg	Standard Volume in m^3
Shower tray for Pluvium shower	**43434**	1	11	0.028

IGUAZU SHOWERS



Iguazu Shower

Matt AISI-316L stainless steel shower for hot and cold water with a white acrylic front panel. Adjustable chromed brass anti-limescale shower-head and 2 mist spray jets controlled by a 2-way control valve. The flow rate and the water temperature are regulated by a mixer valve.

	Code	Standard Pack	Standard Weight in kg	Standard Volume in m^3
Iguazu Shower	**53874**	1	27	0.163

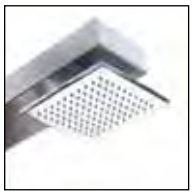

SHOWERHEAD



MIXER TAP



BODY JETS



Iguazu Solar Shower

Matt AISI-316L stainless steel solar shower with a white acrylic front panel. Adjustable chromed brass anti-limescale shower-head and 2 mist spray jets controlled by a 2-way control valve. With a cold water inlet, it enables the water to be heated by means of a 30 litre aluminium accumulator tank, taking advantage of the sun's energy.

	Code	Standard Pack	Standard Weight in kg	Standard Volume in m^3
Iguazu Solar Shower	**56933**	1	32	0.163

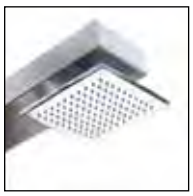

SHOWERHEAD



MIXER TAP



BODY JETS

+ info PDB Product Database
Further information on **PRODUCTS**
www.astralpool.com

SHOWERS - SOLAR SHOWERS

What are the advantages of solar showers?
- user comfort
- energy saving
- easy to install



Niagara Solar Shower

Shower made of polished AISI-304L stainless steel. With a single cold water inlet, it enables the water to be heated by means of a 30 L aluminium accumulator tank, taking advantage of the sun's energy. It has a mixer valve and a square adjustable anti-limescale shower head.

	Code	Standard Pack	Standard Weight in kg	Standard Volume in m^3
Niagara Solar Shower	**53873**	1	25	0.26

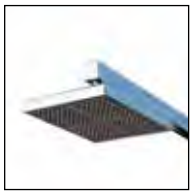

SHOWERHEAD



MIXER TAP



Angel Solar Shower

Grey aluminium shower. With a cold water inlet, it enables the water to be heated by means of a 30 litre aluminium accumulator tank, taking advantage of the sun's energy. It has a mixer valve and an anti-limescale shower head.

	Code	Standard Pack	Standard Weight in kg	Standard Volume in m^3
Angel Solar Shower	**56932**	1	13	0.152



SHOWERHEAD



MIXER TAP

SHOWERS - KNOB VALVES



Niagara Shower

Shower made of polished AISI-304L stainless steel with a square adjustable shower head and a flow-regulating valve.

	Code	Standard Pack	Standard Weight in kg	Standard Volume in m^3
Niagara Shower	**53872**	1	22	0.125

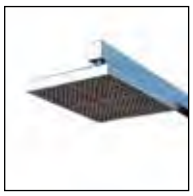

SHOWERHEAD



KNOB



RECOMMENDED

Stainless steel polish/cleaner See P.202



Niagara touchless shower

New

The Niagara touchless shower incorporates a proximity sensor that works with battery for turning on the shower without contact. Its minimalist design and the high quality of its materials provide you with an elegant and modern image.

TECHNICAL FEATURES:

- Made of AISI-304L polished stainless steel
- Water inlet connection 1/2" BSP INT
- Ground anchoring with screws
- Touchless system with sensor detection angle 15 degrees (conical)
- 6V DC Power supply (4xAA 1.5V). Batteries not included.
- Sensor protection class IP67
- Life test 500.000 cycles
- Working pressure 1-4 bar
- Max. temperature water 75ºC

	Code	Standard Pack	Standard Weight in kg	Standard Volume in m^3
Niagara touchless shower	**74102**	1	23	0.125

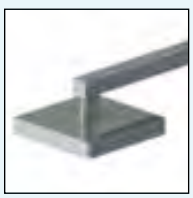

SHOWERHEAD



SENSOR

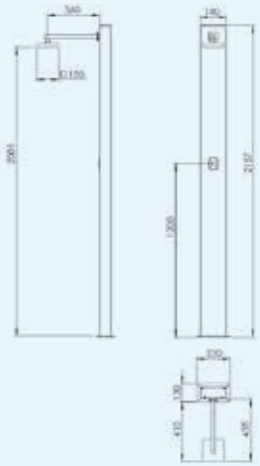

+ info PDB Product Database
Further information on **PRODUCTS**
www.astralpool.com

SHOWERS - KNOB VALVES



Angel shower with footwash

AISI-304L polished stainless steel (Ø 43 mm) shower with 1 chrome anti-limescale showerhead and 1 flow opening valve. Includes footwash tap. With 00107 anchoring fixture incorporated (see page 62).

	Code	Standard Pack	Standard Weight in kg	Standard Volume in m^3
Angel footwash	**52718**	1	5.6	0.43

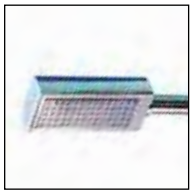

SHOWERHEAD

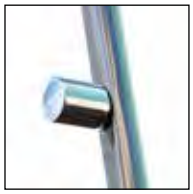

KNOB



FOOTWASH TAP



Angel

AISI-304L polished stainless steel (Ø 43 mm) shower with 1 chrome anti-limescale showerhead and 1 flow opening valve. With 00107 anchoring fixture incorporated (see page 62).

	Code	Standard Pack	Standard Weight in kg	Standard Volume in m^3
Angel Shower	**52717**	1	5.6	0.43

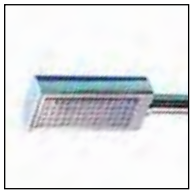

SHOWERHEAD

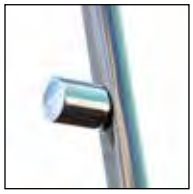

KNOB



Angel Shower with 2 shower heads

AISI-304L polished stainless steel (Ø 63 mm) shower with 2 chrome anti-limescale showerheads and 2 flow opening valves. With 27333 anchoring fixture incorporated (see page 62).

	Code	Standard Pack	Standard Weight in kg	Standard Volume in m^3
Angel Shower with 2 shower heads	**59775**	1	9.58	0.054



SHOWERHEAD



KNOB

SHOWERS - SHOWERS WITH TIMERS

AISI-304L polished stainless steel shower, specially designed for high footfall facilities (public or semi-public pools). AstralPool showers for public facilities are characterised by their highly resistant materials, considered vandal-proof, and the water savings made thanks to their built-in flow limiters. Showerhead height from floor: 2 m. Fastened to floor with screws, with anchoring fixture incorporated.



Shower with timer and 1 shower head

Not designed for installation on a shower tray.

	Code	Standard Pack	Standard Weight in kg	Standard Volume in m^3
Shower with timer and 1 shower head	**59776**	1	7.2	0.044



SHOWERHEAD



TIMER SWITCH



Shower with timer, 1 shower head and footwash

	Code	Standard Pack	Standard Weight in kg	Standard Volume in m^3
Shower with timer, 1 shower head and footwash	**59777**	1	7.5	0.044



SHOWERHEAD



TIMER SWITCHES



FOOTWASH TAP

The new range of timer showers has replaced the showers with code numbers **00095, 00097, 08728, 15841, 19947.**



SHOWERS - SHOWERS WITH TIMERS

Shower with timer and 2 shower heads

	Code	Standard Pack	Standard Weight in kg	Standard Volume in m^3
Shower with timer and 2 shower heads	**59778**	1	7.5	0.044



SHOWERHEADS



TIMER SWITCHES

SHOWERS - ACCESSORIES



Shower anchoring fixtures

Made of plastic, with a locking system for shower disassembly and bonded connection.

	Code	Standard Pack	Standard Weight in kg	Standard Volume in m^3
Shower anchoring Ø 43 mm For models: 52717 and 52718	**00107**	1	0.48	0.003
Shower anchoring Ø 63 mm For model: 59775	**27333**	1	1.0	0.003

+ info PDB Product Database
Further information on **PRODUCTS**
www.astralpool.com

SHOWERS - SHOWER TRAYS



Relax model shower tray

Dimensions 80 cm x 90 cm. Large stainless steel shower tray positioned away from the standing area. Non-slip surface. Made of polyester + fibreglass. Gelcoat Finish.

	Code	Standard Pack	Standard Weight in kg	Standard Volume in m^3
With Ø 43 mm anchoring fixture for Angel showers 52717 and 52718 (page 60).	**20066**	1	9.0	0.16

Also available with D.63 anchoring (20067) and without anchoring (20073).

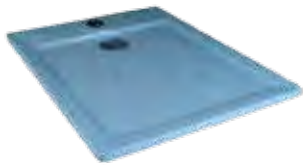

Classic model shower tray

Dimensions 100 cm x 80 cm. Large stainless steel shower tray. Non-slip surface. Made of polyester + fibreglass. Gelcoat Finish.

	Code	Standard Pack	Standard Weight in kg	Standard Volume in m^3
With Ø 43 mm anchoring fixture for Angel showers 52717 and 52718 (page 60)	**19723**	1	10.0	0.16

Also available with D.63 anchoring (19724) and without anchoring (19725).



Shower tray

Dimensions 80 cm x 80 cm, with adjustable main drain. Ø 130 mm grille, Ø 50 mm connection. Made of polyester + fibreglass.

	Code	Standard Pack	Standard Weight in kg	Standard Volume in m^3
With Ø 43 mm anchoring fixture for Angel showers 52717 and 52718 (page 60).	**00103**	1	11.0	0.16

Available with D.63 anchoring (code 00104).

ASTRALPOOL BIKE



AstralPool Bike

Aquabike made of square and rectangular polished AISI-316L stainless steel pipe. Ideal for gyms, wellness centres, spas, medical facilities, hotels and private pools.

- Adjustable height of saddle and handlebar.
- For use in public and residential pools from 1 to 1.5 metres in depth.
- Ergonomic.
- Pedals made of PUR.
- Easy to move about.

	Code	Standard Pack	Standard Weight in kg	Standard Volume in m^3
AstralPool Bike	**67333**	1	20	0.12

+ info PDB Product Database
Further information on **PRODUCTS**
www.astralpool.com

ORNAMENTAL WATER FEATURES - CANNONS AND WATERFALLS



Pluvium water features and ornaments

The water features in the AstralPool Signature range add a touch of elegance and design to any pool, not to mention their main purpose: increasing swimmers' feeling of wellbeing. We are proud to present the PLUVIUM cannon and waterfall. They combine wood and satin finish AISI 316L stainless steel. These products match others AstralPool Signature Pluvium shower range. 3-year warranty.

	Code	Standard Pack	Standard Weight in kg	Standard Volume in m^3
Pluvium cannon, 7 m^3/h, 5 mca.	**45868**	1	11	0.089
Pluvium waterfall, 12 m^3/h, 2 mca.	**45869**	1	31	0.284



The following fastening systems are recommended:

	Code	Standard Pack	Standard Weight in kg	Standard Volume in m^3
Pluvium cannon anchoring	**45872**	1	2	0.005
Pluvium waterfall anchoring	**45873**	1	3.5	0.015

NOTE: The water features do NOT include anchoring, a pump, control panel or suction system.



RECOMMENDED
Pluvium shower See p.56



A-350 and A-500 residential water curtains

- Range of ornamental fountains to enhance pool design.
- Made of AISI-304L and AISI-316L stainless steel.
- Polished finish.
- Fastened to the ground with screws and anchor studs.
- 1½" ext. R. connection.

	Code	Standard Pack	Standard Weight in kg	Standard Volume in m^3
A-350 AISI-316L residential water curtain	**65104**	1	10	-
A-500 AISI-316L residential water curtain	**65105**	1	13	-
A-350 AISI-304L residential water curtain	**65106**	1	10	-
A-500 AISI-304L residential water curtain	**65107**	1	13	-

NOTE: The water features do not include a pump, control box or suction pipes.

NOTE: The water features do not include a pump, control box or suction pipes.

ORNAMENTAL WATER FEATURES - CANNONS AND WATERFALLS

Range of cascades for residential pools made of AISI-316L stainless steel. The range is made up of three cascades in an outstanding modern design. Polished + matt finish.
All models come with anchoring. A ½ HP pump is recommended.



Classic water curtain

	Code	Standard Pack	Standard Weight in kg	Standard Volume in m³
Classic water curtain	**57095**	1	28	0.38



Straight water curtain

	Code	Standard Pack	Standard Weight in kg	Standard Volume in m³
Straight water curtain	**57096**	1	36	0.25



One water curtain

	Code	Standard Pack	Standard Weight in kg	Standard Volume in m³
One water curtain	**57097**	1	36	0.25



RECOMMENDED

Victoria Plus Silent pump See P.174



Residential water curtain

Residential water curtain in polished stainless steel. Fastened to the ground with screws and anchor studs.

	Code	Standard Pack	Standard Weight in kg	Standard Volume in m³
A-350 AISI-316L stainless steel, 12 m³/h 2 mca	**52244**	1	10	0.12
A-500 AISI-316L stainless steel, 18 m³/h 2 mca	**52245**	1	15	0.24

Code	Suction concrete	Variable speed	Control box	*Optional Push button + Switch
52244	00302 x 2	65560	25719	04047 + 04050
52245	00302 x 2	65562	25719	04047 + 04050

* See page 410.

** Optional: components for turning the waterfall on from the pool.

NOTE: The water features do not include a pump, control box or suction pipes.

ORNAMENTAL WATER FEATURES - CANNONS AND WATERFALLS

Residential water cannon

Residential water cannon in polished stainless steel. Fastened to the ground with screws and anchor studs.



52242

52243

	Code	Standard Pack	Standard Weight in kg	Standard Volume in m³
AISI-316L stainless steel				
Round opening. 5 m³/h, 2 mca	**52242**	1	3	0.12
Flat opening. 15 m³/h, 2 mca	**52243**	1	5	0.13
AISI-304L stainless steel				
Round opening. 5 m³/h, 2 mca	**52238**	1	3	0.12
Flat opening. 15 m³/h, 2 mca	**52239**	1	5	0.13

Code	Suction concrete	Pump	Control box	*Optional Push button + Switch
52242	00302	65557	25718	04047 + 04050
52243	00302 x 2	65566	25719	04047 + 04050
52238	00302	65557	25718	04047 + 04050
52239	00302 x 2	65560	25719	04047 + 04050

*Optional: components for turning the cannon on from the pool.

Ornamental waterfalls



In AISI-316L stainless steel.

	Code	Standard Pack	Standard Weight in kg	Standard Volume in m³
Width (W) 300 mm. 1½" connection (B)	**05577**	1	6.9	0.06
Width (W) 600 mm, 2" connection (B)	**05578**	1	11.9	0.09

Code water feature	Face plate	Anchoring sockets		Suction		Pump	Control box		
		Concrete	Liner	Concrete	Liner		Manual push button	Pneumatic push button	
								Concrete	Liner
05577	-	-	-	**19987** x 1	**20091** x 1	**38770**	**19988**	**07669**	**07868**
05578	-	-	-	**19987** x 2	**20091** x 2	**38776**	**19989**	**17154**	**17155**

Note: The pneumatic push button includes: control box, wall conduits and push button.

SilkFlow waterfalls



Waterfall made of corrosion resistant ABS. Can be fed through the return circuit of the pool filter or through a specific pump.

	Code	Standard Pack	Standard Weight in kg	Standard Volume in m³
300 mm waterfall	**45205**	1	1.19	0.012
600 mm waterfall	**45206**	1	2.36	0.021
900 mm waterfall	**45207**	1	3.45	0.003
1200 mm waterfall	**45208**	1	4.62	0.004

Code	Required water flow l/min	Standard pump size HP	A Length of waterfall	B Width of waterfall over the pool surface, at the recommended rate of l/min/m	C Recommended height for the waterfall	D Distance of the water at the recommended rate of l/min/m
45205	50	0,5	300 mm	200 mm	300 mm	300 mm
45206	100	0,5	600 mm	500 mm	600 mm	300 mm
45207	150	0,75	900 mm	800 mm	900 mm	300 mm
45208	200	0,75	1200 mm	1100 mm	900 mm	300 mm

GRILLES FOR OVERFLOW

GENERAL NOTE FOR ALL MODELS

Made of PP stabilized against UV rays. The whole range comes in white. Ask your dealer about other colours.

Made up of tiles in modules for straight and curved sections (outer radius of 1 or 2 m), they click into place (male-female fitting), which gives certain leeway in assembling them, as well as absorbing their potential expansion due to the temperature changes to which they are exposed.

For all models of grating, a channel 5 mm wider than the grating must be built so that it easily fits into place and any potential expansion is prevented.

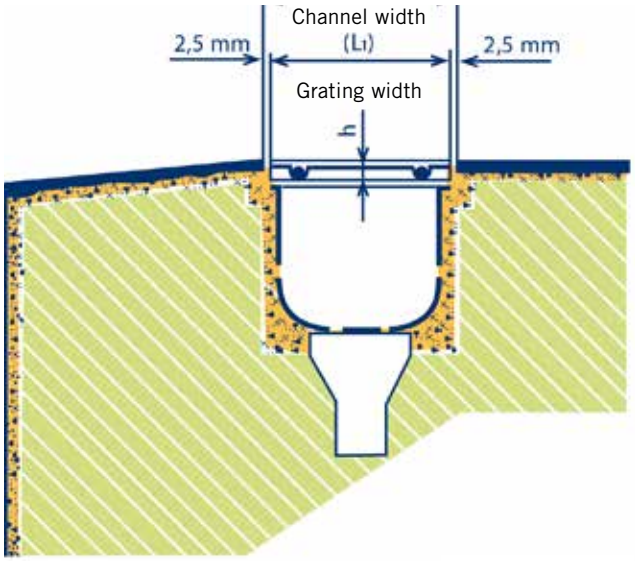

Channel width	Grating width
200	195
250	245
300	295
350	345

The height (h) of the grating varies depending on the model.

– Longitudinal model h = 24 mm

– Transversal model h = 22 mm and h = 35 mm

LONGITUDINAL MODEL

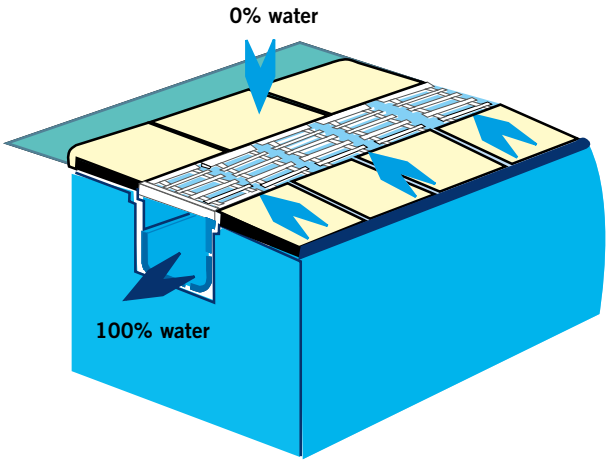

The longitudinal design of this model ensures that any excess water from the pool is not allowed to overflow onto the pool deck, thus maintaining it practically dry.

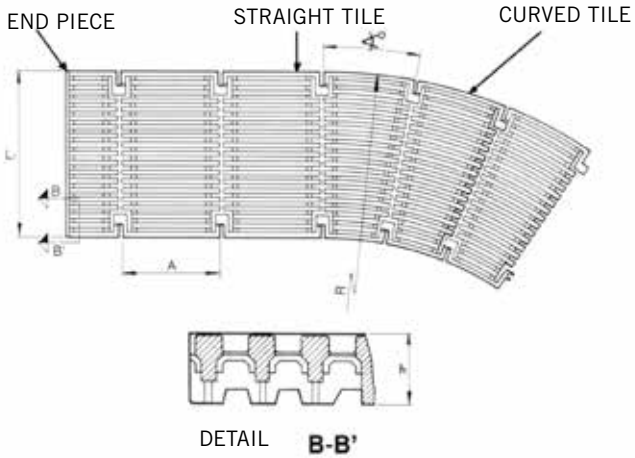

	Model	L	L1	h	A	∢°r.1m.	∢°r.2m.
STRAIGHT TILE	05581	200	195	24	206	-	-
	05582	250	245	24	206	-	-
	05583	300	295	24	206	-	-
	05584	350	345	24	206	-	-
END PIECE	06420	200	195	24	-	-	-
	06421	250	245	24	-	-	-
	06422	300	295	24	-	-	-
	06423	350	345	24	-	-	-
CURVED TILE	08001	200	195	24	-	x	
	08002	300	295	24	-	x	
	07565	250	245	24	-	x	
	07566	350	345	24	-	x	
	05585	200	195	24	-		x
	05586	250	245	24	-		x

+ info PDB Product Database
Further information on **PRODUCTS**
www.astralpool.com

GRILLES FOR OVERFLOW



Longitudinal grating tile

Made of PP stabilized against UV rays. Grating fastened together using male-female hooks (5 units = 1,024 meters). The flexible properties of the grating means a radius of up to 5 m can be covered.

	Code	Standard Pack	Standard Weight in kg	Standard Volume in m^3
Height 24 mm, width 195 mm	**05581**	45	16.2	0.080
Height 24 mm, width 245 mm	**05582**	29	13.4	0.080
Height 24 mm, width 291 mm	**05583**	28	15.6	0.080
Height 24 mm, width 345 mm	**05584**	19	13.2	0.080



Curved grating tile

Made of PP stabilized against UV rays. Grating fastened together using male-female hooks.

Height	L	L1	Radius	Code	Standard Pack	Standard Weight in kg	Standard Volume in m^3
24 mm	200 mm	195 mm	1 m	**08001**	60	17.2	0.079
24 mm	300 mm	295 mm	1 m	**08002**	32	14.6	0.079
24 mm	250 mm	245 mm	1 m	**07565**	42	17.2	0.079
24 mm	350 mm	345 mm	1 m	**07566**	24	13.4	0.079
24 mm	200 mm	195 mm	2 m	**05585**	48	17.2	0.079
24 mm	250 mm	245 mm	2 m	**05586**	30	14.2	0.079



End piece kit for parallel grating

Made of AISI-304 stainless steel plate, with end piece and longitudinal grating made of PP stabilized against UV rays. Made so that the grating in the end piece can be cut to fit in place.

	Code	Standard Pack	Standard Weight in kg	Standard Volume in m^3
Height 24 mm, width 195 mm	**16064**	15	5.11	0.002
Height 24 mm, width 245 mm	**16065**	12	5.17	0.002
Height 24 mm, width 291 mm	**16066**	8	4.21	0.002
Height 24 mm, width 345 mm	**16067**	8	5.00	0.002



Perimeter grating

Range of overflow grating for swimming pools. Made of homopolymer polypropylene, with additives for UV protection. Available in 500 mm long modules with male-female hooks for easy and fast assembly.

	Code	Standard Pack	Standard Weight in kg	Standard Volume in m^3
0.5 m longitudinal grating Height 22 mm Width 195 mm	**28664**	20	19.9	0.080

Other grating colours can be made to order.
For further information, ask your AstralPool dealer.

GRILLES FOR OVERFLOW

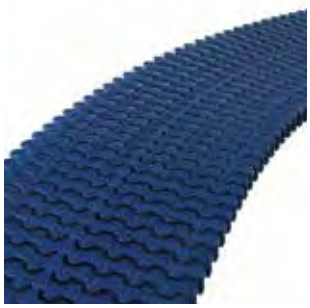

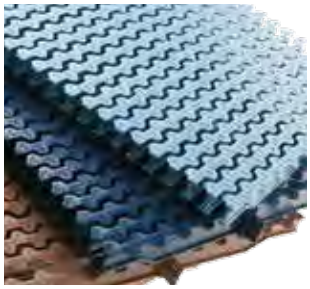

Modular transversal grating for curves

Made of PP stabilized against UV rays. Assembled by fitting the modules together. Available in 5 colours. Other grating colours can be made to order. For further information, please contact your AstralPool dealer.

	Code	Standard Pack	Standard Weight in kg	Standard Volume in m^3
Modular grating for curves				
Height 22 mm, width 195 mm	**34190**	470	14.1	0.08
Height 22 mm, width 245 mm	**34191**	320	12.4	0.08
Height 22 mm, width 295 mm	**34192**	300	15.0	0.08
Height 22 mm, width 335 mm	**34193**	250	15.0	0.08
Reversible modular grating for curves				
Height 35 mm, width 195 mm	**34194**	450	16.0	0.08
Height 35 mm, width 245 mm	**34195**	300	13.7	0.08
Height 35 mm, width 295 mm	**34196**	290	17.3	0.08
Height 35 mm, width 335 mm	**34197**	250	17.4	0.08

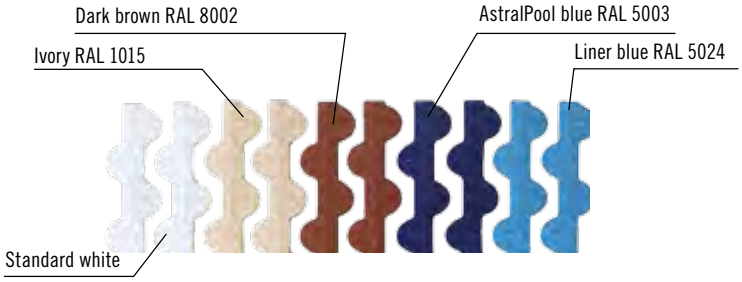

Colour	Code
White	-
RAL 1015	**CL90**
RAL 8002	**CL109**
RAL 5003	**CL60**
RAL 5024	**CL 108**

Note: Colours in the pictures are not exactly the same as in real product.



Other grating colours can be made to order.
For further information, ask your AstralPool dealer.

Transversal grating for curves

Modular transversal grating for curves. Made of PP stabilized against UV rays. Assembled by fitting the modules together. Class 3 slip resistance (Rd>45) pursuant to UNE-ENV 12633: 2003.

	Code	Standard Pack	Standard Weight in kg	Standard Volume in m^3
Modular grating for curves				
Height 22 mm, width 195 mm	**52535**	470	14.1	0.08
Height 22 mm, width 245 mm	**52536**	320	12.4	0.08
Height 22 mm, width 295 mm	**52537**	300	15.0	0.08
Height 22 mm, width 335 mm	**52538**	250	15.0	0.08
Reversible modular grating for curves				
Height 35 mm, width 195 mm	**52539**	450	16.0	0.08
Height 35 mm, width 245 mm	**52540**	300	13.7	0.08
Height 35 mm, width 295 mm	**52541**	290	17.3	0.08
Height 35 mm, width 335 mm	**52542**	250	17.4	0.08

Other grating colours can be made to order.
For further information, ask your AstralPool dealer.

GRILLES FOR OVERFLOW



Modular transversal grating for curves

Made of PP stabilized against UV rays. Assembled by fitting the modules together.

	Code	Standard Pack	Standard Weight in kg	Standard Volume in m^3
Modular grating for curves				
Height 22 mm, width 195 mm	**11107**	470	15.8	0.080
Height 22 mm, width 245 mm	**11108**	320	13.6	0.080
Height 22 mm, width 295 mm	**19202**	300	18.0	0.080
Height 22 mm, width 335 mm	**19203**	250	17.0	0.080
Reversible modular grating for curves				
Height 35 mm, width 195 mm	**00220**	450	16.5	0.080
Height 35 mm, width 245 mm	**00221**	300	14.3	0.080
Height 35 mm, width 295 mm	**00222**	290	19.3	0.080
Height 35 mm, width 335 mm	**00223**	250	18.1	0.080



Modular grating for curves

Made of PP stabilized against UV rays. Assembled by fitting the modules together. Non-slip surface. Other colours available on request. For further information, please contact your AstralPool dealer. Compliant with standard EN-13451-1 (8 mm). Class 3 slip resistance (Rd>45) pursuant to UNE-ENV 12633: 2003.

	Code	Standard Pack	Standard Weight in kg	Standard Volume in m^3
Modular grating for curves				
Height 22 mm, width 195 mm	**28656**	470	20.84	0.082
Height 22 mm, width 245 mm	**28657**	320	18.80	0.082
Height 22 mm, width 295 mm	**28658***	300	18.80	0.082
Height 22 mm, width 335 mm	**28659***	250	20.84	0.082
Reversible modular grating for curves				
Height 35 mm, width 195 mm	**28660**	450	26.90	0.082
Height 35 mm, width 245 mm	**28661**	300	24.70	0.082
Height 35 mm, width 295 mm	**28662***	290	26.61	0.082
Height 35 mm, width 335 mm	**28663***	250	22.25	0.082

* In testing process.



Transversal grating

Made of PP stabilized against UV rays. Fastened together by a pass-through cable (49 units per metre).

	Code	Standard Pack	Standard Weight in kg	Standard Volume in m^3
Height 22 mm, width 195 mm	**00212**	340	11.9	0.039
Height 22 mm, width 245 mm	**00213**	305	13.2	0.039

+ info PDB Product Database

Further information on **PRODUCTS**
www.astralpool.com

GRILLES FOR OVERFLOW



Stainless steel plastic coated cable

Ø 2.5 mm for fastening modules together.

	Code	Standard Pack	Standard Weight in kg	Standard Volume in m³
Stainless steel plastic coated cable	**00214**	1000 m	21.0	0.036



AISI-316L stainless steel plastic coated cable

Ø 2.5 mm for fastening modules together.

	Code	Standard Pack	Standard Weight in kg	Standard Volume in m³
AISI-316L stainless steel plastic coated cable	**00215**	1000 m	21.0	0.036



Cable locking pins

Made of brass.

	Code	Standard Pack	Standard Weight in kg	Standard Volume in m³
Cable locking pins	**00216**	100	1.5	0.001

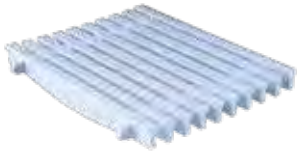

Transversal grating tile

Made of PP stabilized against UV rays. Tiles fitted together using a snap fastening system (5 units = 0.975 m).

	Code	Standard Pack	Standard Weight in kg	Standard Volume in m³
Height 22 mm, width 245 mm	**00217**	52	22.8	0.080
Height 22 mm, width 295 mm	**00218**	45	23.1	0.080
Height 22 mm, width 335 mm	**00219**	38	22.0	0.080

Other grating colours can be made to order.
For further information, ask your AstralPool dealer.



Grating support profile

Suitable for grating heights of 22, 24 and 35 mm. Made of weather resistant plastic. Supplied in 2 m strips. Inside measurements: 24 mm x 37 mm.

Available in other colours. For further information, ask your dealer.

	Code	Standard Pack	Standard Weight in kg	Standard Volume in m³
Grating support profile	**00224**	25	13.2	0.033



90° corner tiles for overflow channels

Made of white, injection moulded copolymer polypropylene.

	Code	Standard Pack	Standard Weight in kg	Standard Volume in m³
Height 22 mm, channel width 195 mm	**22379**	4	2.8	0.006
Height 22 mm, channel width 245 mm	**22380**	4	3.6	0.009
Height 22 mm, channel width 295 mm	**22381**	4	4.8	0.012
Height 22 mm, channel width 335 mm	**22382**	4	5.7	0.016
Height 35 mm, channel width 195 mm	**22383**	4	3.2	0.009
Height 35 mm, channel width 245 mm	**22384**	4	4.1	0.014
Height 35 mm, channel width 295 mm	**22385**	4	5.3	0.012
Height 35 mm, channel width 335 mm	**22386**	4	6.2	0.023

Other grating colours can be made to order.
For further information, ask your AstralPool dealer.

+ info
PDB Product Database
Further information on **PRODUCTS**
www.astralpool.com

GRILLES FOR OVERFLOW



Complies with Standard **EN 13451-1-3**

Complies with Standards **EN 16582-1** **EN 16713-2**

Stainless steel longitudinal grating

Longitudinal grating made of stainless steel. A channel 5 mm wider than the grating must be dug so that it is easy to fit.

It is made up of straight sections of AISI-316L stainless steel, 500 mm in length. Straight sections can be made to measure in order to fit the length of any pool.

There are 4 different models depending on the grating used. Height 35 mm.

	Code	Standard Pack	Standard Weight in kg	Standard Volume in m^3
Stainless steel 195 mm longitudinal grating	**32415**	-	-	-
Stainless steel 245 mm longitudinal grating	**32416**	-	-	-
Stainless steel 295 mm longitudinal grating	**32417**	-	-	-
Stainless steel 345 mm longitudinal grating	**32418**	-	-	-



70956

Stainless steel reinforced grating

AISI-316L stainless steel grating, compliant with standard EN: 1345-1:2000. Resistant to salt water. Intended for use in both residential and public pools.

	Code	Standard Pack	Standard Weight in kg	Standard Volume in m^3
Reinforced 252 x 252 mm grating	**70956**	1	-	-
Reinforced 410 x 410 mm grating	**70957**	1	-	-

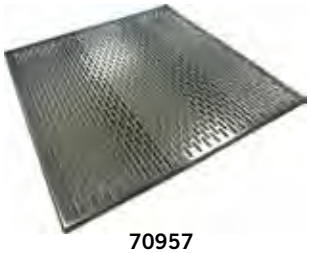

70957

Complies with Standard **EN 1345-1:2000**



POOL SHELL EQUIPMENT

77 • AstralPool pool shell material color range

Concrete pool

78 • 15 l skimmers
79 • 17,5 l skimmers
82 • Skimmer accessories
87 • Stainless steel skimmer accessories
88 • Level regulators
90 • Main drains
94 • Main drain accessories
95 • Main drain grilles
97 • ABS inlets
102 • Stainless steel inlets
103 • Wall bushings

Liner and prefabricated pool

105 • 15 l skimmers
107 • 17.5 l skimmers
111 • Skimmer accessories
112 • 17.5 L Stainless steel skimmer
112 • Accessories for Stainless steel skimmers
114 • Main drains
118 • Main drain accessories
119 • Level regulators
120 • ABS inlets
126 • Stainless steel inlets
129 • Wall bushings

130 • Skimfilters
130 • Swimming pool shell material packs
132 • Installation diagrams

POOL SHELL MATERIALS

RANGE OF COLORS

VERSATILITY AND COLOR FOR YOUR POOL

A wide range of recessed components
in different colors for a perfect finish
in your prefabricated pool.



ASTRALPOOL

FILTERING SKIMMER

THE EASY TO INSTALL 2-IN-1 SOLUTION



Easy and fast installation : The installation of this integrated solution (skimmer + cartridge) means that the installer will save a lot of time when building a pool and it significantly reduces labor costs.

Two-in-one skimmer and filter solution :

1. The skimmer drains the water and retains any debris.

2. The water is then filtered by the integrated cartridge of 15 microns that delivers unbeatable filtration quality. Once the water is clean, it is sucked by the pump and sent back to the pool. See our pump recommendations at the bottom of this page.

SKIMMER & CARTRIDGE

1. EASYCOLOR SHEATH

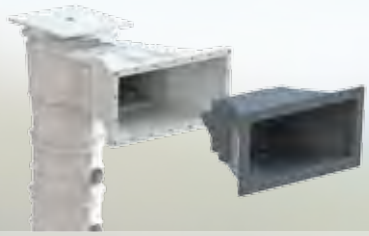

→ The color change is proposed with an inlet sheath, both the embellisher and the floater. This sheath could be installed without changing the skimmer mouth what is very practical to renew or upgrade pools.

2. OPTIMUM FILTRATION & EASY TO REPLACE



→ **Optimum filtration quality : 15 microns.**
In addition, the skimmer's cartridges are easy to change.

3. SAFE AND INTEGRATED

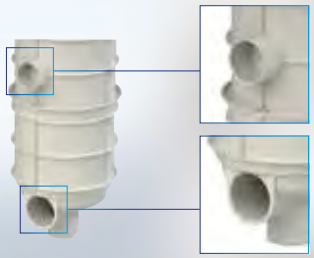

→ Possibility to have side suction nozzle inlets, as well as an upper mouth, in order to avoid blockages and ensure that the pump always sucks filtered water.

4. WHICH SKIMMER TO CHOOSE?

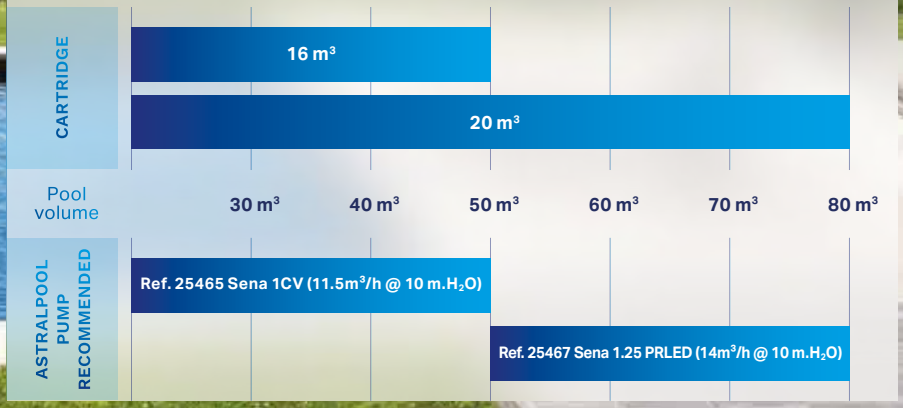

ASTRALPOOL

STAINLESS STEEL POOL FITTINGS

A FULL RANGE FOR CONSTRUCTION

Using stainless steel in AISI 316-L pools has many advantages in comparison with traditional materials.

- ✓ Better resistance to high and low temperatures, no deformation.
- ✓ Better looking quality finishes.
- ✓ Doesn't age due to exposure to sunlight.
- ✓ Easy to clean.
- ✓ Stainless steel is environmentally friendly and 100% recyclable.

This is why AstralPool, a world leader in the manufacture and supply of pool materials, is launching a line of embedding products in high quality stainless steel (AISI 316-L), ideal for the construction, refurbishment and upgrade of your pool.



LumiPlus FlexiNiche



High Water Level Skimmer



Embellishers to ABS pool fits

ASTRALPOOL

ASTRALPOOL POOL SHELL MATERIAL COLOR RANGE

Summary of the standard pool fits that exist in color version :
- Beige
- Light Grey
- Anthracite

Family		Descriptions	Concrete pool	Colors	Page	Liner and Prefabricated pool	Colors	Page
Skimmer	15L	Skimmer 15L STD - opening	00249CLXXX		78			
		Skimmer 15L - with wide mouth opening	00251CLXXX		78	34413CLXXX		105
		Skimmer 15L - with wide mouth without flanges				06470CLXXX		106
	17.5L	Skimmer Norm - with inserts				56176CLXXX		108
		Skimmer Norm - without inserts	58707CLXXX		79	56299CLXXX		108
		Skimmer 17,5L - with standard mouth opening				11309CLXXX		109
		Skimmer 17,5L - with standard opening				11310CLXXX		109
		Skimmer 17,5L - with standard opening for parker model				11316CLXXX*		109
		Skimmer 17,5L with wide mouth opening				11311CLXXX		110
		Skimmer 17,5L - with wide mouth opening for parker model				11317CLXXX		110
Main drain		Norm main drain	56378CLXXX		90	56380CLXXX		114
		Norm main drain - Antivortex grating	56379CLXXX		90	56382CLXXX		114
		Norm main drain - without inserts				56381CLXXX		114
		Norm main drain - ithout inserts Antivortex grating				56383CLXXX		114
		Round main drain 2" oulet				00271CLXXX		115
		Round main drain 2" oulet - without inserts	01467CLXXX		90	06474CLXXX		115
Nozzles	Impulsion	Multiflow return inlet	00295CLXXX		98	00330CLXXX		120
		Multiflow return inlet	00298CLXXX		98	00334CLXXX		121
		Multiflow return inlet				17383CLXXX		120
		Norm return inlet				56499CLXXX		120
		Norm return inlet				56500CLXXX		120
	Suction Pool Floor	Suction nozzle	00300CLXXX		100	17382CLXXX		123
		Suction nozzle 2"				00336CLXXX		124
	Pool Floor	Pool floor return inlet	00303CLXXX		99	00340CLXXX		122
		Pool floor return inlet with swivel joint	22353CLXXX		100			
Net & clean		Nozzles	65234CLXXX					246
Lighting	Flexi	Faceplate Niche	71209CLXXX					256
		Faceplate Slim	71210CLXXX					256
		Faceplate Rapid	71211CLXXX					256
	Mini	Faceplate Mini V2	08554-0500CLXXX					260
		Faceplate Mini V2 Niche	04582-0500CLXXX					260

* available untill end of stocks

XXXXXCL090 Beige XXXXCL129 Light Grey XXXXXCL144 Anthracite

Choice of cover colours for skimmers

CONCRETE POOL - 15 L SKIMMERS

All of the components that are exposed in this range of skimmers come with a UV treatment. Made of ABS, they come with a weir flap and a flow regulator check valve. Bottom suction nozzle connection: 1½" inner thread, 2" outer thread. Simultaneous connection to the main drain: Ø 50 mm inner wall. Overflow connection: Ø 40 mm. Leaf trap. Recommended flow rate: 5 m³/h. It is recommended that one skimmer be installed for every 25 m² of water surface area.



Complies with Standards
EN 16582-1
EN 16713-2

Skimmer with standard mouth opening

	Code	Standard Pack	Standard Weight in kg	Standard Volume in m³
With round lid - White	**00249**	1	2.95	0.059
With round lid - Beige	**00249CL090**	1	2.95	0.059
With round lid - Light grey	**00249CL129**	1	2.95	0.059
With round lid - Anthracite grey	**00249CL144**	1	2.95	0.059
With square lid	**00250**	1	3.15	0.059

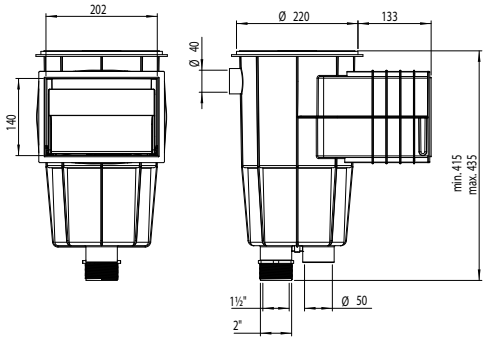



Complies with Standards
EN 16582-1
EN 16713-2

Skimmer with wide mouth opening

	Code	Standard Pack	Standard Weight in kg	Standard Volume in m³
With round lid - White	**00251**	1	4.47	0.12
With round lid - Beige	**00251CL090**	1	4.47	0.12
With round lid - Light grey	**00251CL129**	1	4.47	0.12
With round lid - Anthracite grey	**00251CL144**	1	4.47	0.12
With square lid	**00252**	1	3.00	0.12

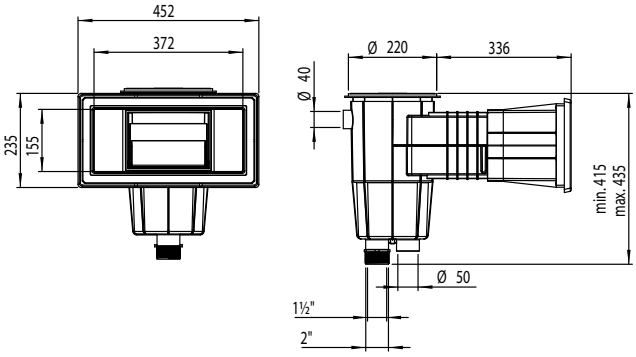

+ info PDB Product Database
Further information on **PRODUCTS**
www.astralpool.com

CONCRETE POOL - 17.5 L SKIMMERS

All of the components that are exposed in this range of skimmers come with a UV treatment. Made of ABS, they come with a weir flap and a flow regulator check valve. Bottom suction nozzle connection: 1½" inner thread. Simultaneous connection to the main drain: 2" inner thread. Overflow connection: Ø 32 mm. Round cover with spring clip fastening system. The height of the cover can be adjusted and turned through an extended throat, so that it sits perfectly flush with the coping stone.
Leaf trap secured to base by means of a bayonet mount. In-built weir flap housing.
Recommended flow rate: 7.5 m³/h. It is recommended that one skimmer be installed for every 25 m² of water surface area.



58707



58707CL090



58707CL129



58707CL144

Complies with Standards
EN 16582-1
EN 16713-2

NORM skimmer

17L skimmer range suitable for installation in public and private pools. Manufactured in ABS with UV treatment, it comes with a weir flap, flow regulator, lid height adjustment and basket. The water inlet is 495 x 80 mm. Recommended flow rate of 7.5 m³/h. Install one skimmer every 25 m² of water line surface area. Connections under 1 ½" and 2", water overflow connection of Ø 40 mm.

	Code	Standard Pack	Standard Weight in kg	Standard Volume in m³
NORM 17,5L skimmer				
White	**58707**	1	5.61	0.182
Beige	**58707CL090**	1	5.61	0.182
Light grey	**58707CL129**	1	5.61	0.182
Anthracite grey	**58707CL144**	1	5.61	0.182

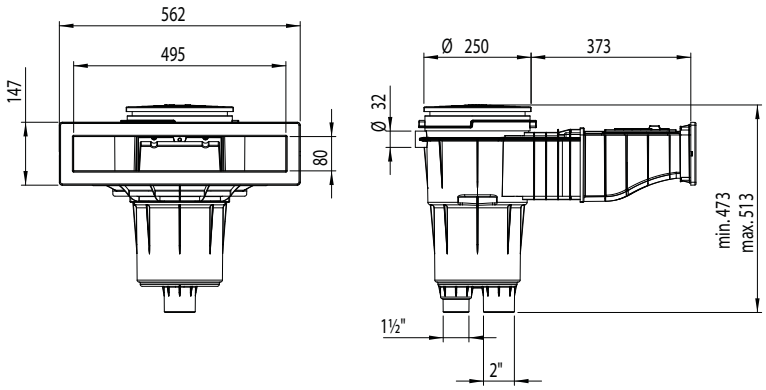

Skimmer with standard mouth opening



	Code	Standard Pack	Standard Weight in kg	Standard Volume in m³
With square lid	**11306**	1	4.20	0.062

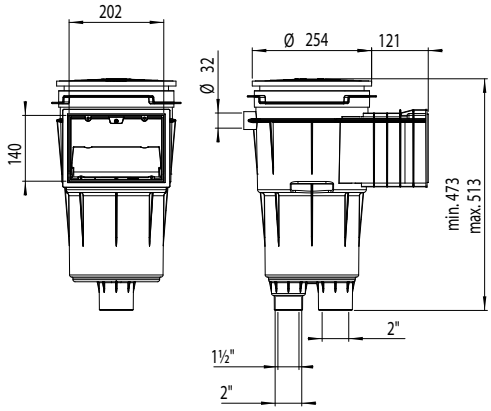

Complies with Standards
EN 16582-1
EN 16713-2

+ info PDB Product Database
Further information on **PRODUCTS**
www.astralpool.com

CONCRETE POOL - 17.5 L SKIMMERS







Complies with Standards **EN 16713-1**

Complies with Standards **EN 16582-1** **EN 16713-2**

Filtering Skimmer

New

17.5 L skimmer with cartridge system integrated. Made of ABS with UV treatment. Incorporate gate, regulator lid height, skimmer basket and 2 cartridge filters. Upper access water connection Ø 32 m, bottom connections of Ø 63 mm and lateral of Ø 50 mm. Lateral connections are for connecting suction nozzles.

The color change is proposed with an inlet sheath, both the embellisher and the floater. This sheath could be installed without change the skimmer mouth what is very practical to renew or upgrade pools.

	Code	Standard Pack	Standard Weight in kg	Standard Volume in m³
Filtering skimmer - white				
Filtering skimmer with 2 cartridges 16 m³	**73158**	1	12	0.32
Filtering skimmer with 2 cartridges 20 m³	**73161**	1	13	0.32
EASYCOLOR - Inlet sheath*				
Light grey - inlet sheath	**73166CL129**	1	1.22	0.02
Anthracite - inlet sheath	**73166CL144**	1	1.22	0.02
Beige - inlet sheath	**73166CL090**	1	1.22	0.02
Cartridge				
Cartridge* 16 m³/h - 15 microns	**73164**	1	1.64	0.02
Cartridge* 20 m³/h - 15 microns	**73165**	1	2.24	0.026

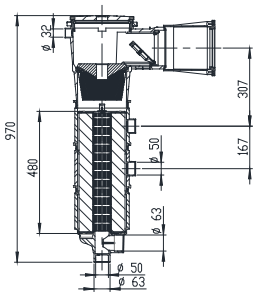

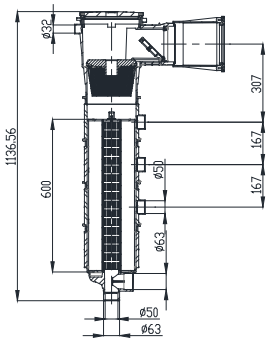

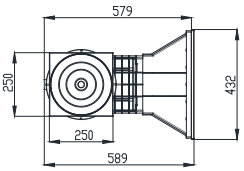

*2-year limited warranty - please refer to the instruction manual



Complies with Standards **EN 16582-1** **EN 16713-2**

Skimmer with standard opening and face plate

	Code	Standard Pack	Standard Weight in kg	Standard Volume in m³
With square lid	**11302**	1	5.20	0.062

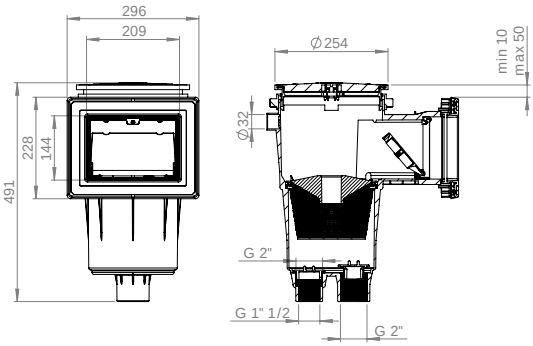

CONCRETE POOL - 17.5 L SKIMMERS

Skimmer with standard opening and extended throat



Complies with Standards
EN 16582-1
EN 16713-2

	Code	Standard Pack	Standard Weight in kg	Standard Volume in m³
With square lid	**11307**	1	5.90	0.077

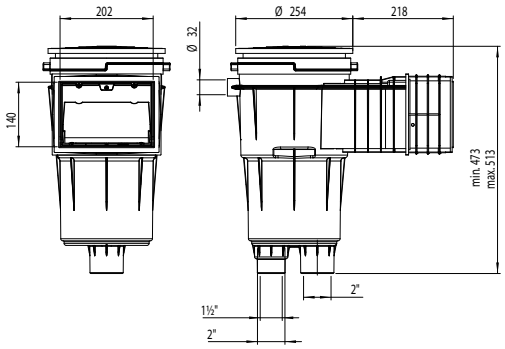

Skimmer with standard opening, extended throat and face plate



Complies with Standards
EN 16582-1
EN 16713-2

	Code	Standard Pack	Standard Weight in kg	Standard Volume in m³
With square lid	**11303**	1	5.75	0.060

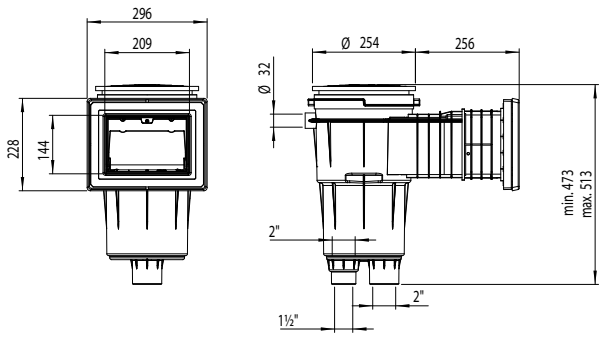

Skimmer with wide mouth opening



Complies with Standards
EN 16582-1
EN 16713-2

	Code	Standard Pack	Standard Weight in kg	Standard Volume in m³
With square lid	**11304**	1	6.24	0.135

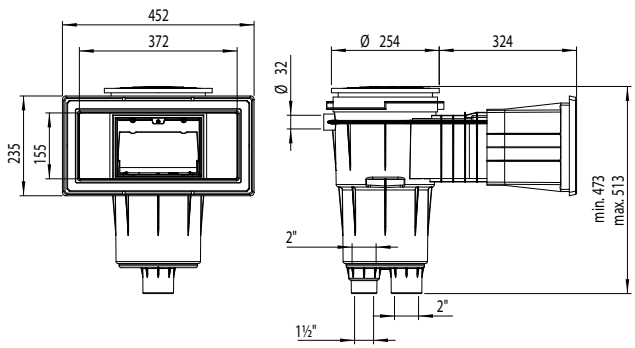

+ info
PDB Product Database
Further information on **PRODUCTS**
www.astralpool.com

CONCRETE POOL - 17.5 L SKIMMERS



Complies with Standards
EN 16582-1
EN 16713-2

Skimmer with extended throat and wide opening

	Code	Standard Pack	Standard Weight in kg	Standard Volume in m³
With square lid	**11305**	1	6.90	0.161

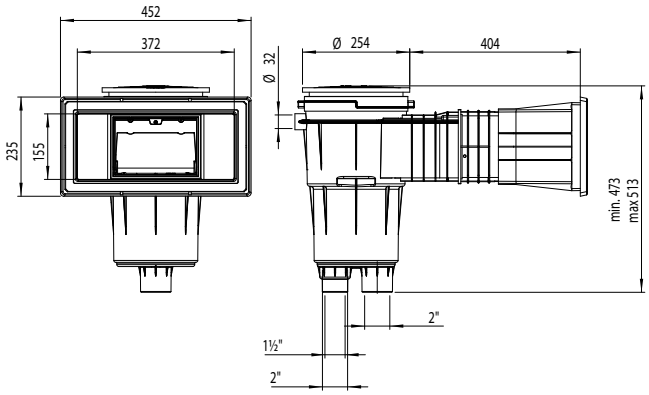

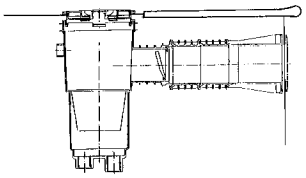

The 17.5 litre skimmer can be made to order with much larger throat extensions than the standard size. This can be particularly useful if wider coping stones than usual are installed.

CONCRETE POOL - SKIMMER ACCESSORIES


00249-0600CL090


00249-0600CL129


00249-0600CL144


00249-0700CL090


00249-0700CL129


00249-0700CL144

Covers for 15 l skimmers

	Code	Standard Pack	Standard Weight in kg	Standard Volume in m³
Round cover, round face plate				
Beige	**00249-0600CL090**	23	7.9	0.069
Light grey	**00249-0600CL129**	23	7.9	0.069
Anthracite grey	**00249-0600CL144**	23	7.9	0.069
Round cover, square face plate				
Beige	**00249-0700CL090**	13	6.9	0.069
Light grey	**00249-0700CL129**	13	6.9	0.069
Anthracite grey	**00249-0700CL144**	13	6.9	0.069

CONCRETE POOL - SKIMMER ACCESSORIES



Covers for 17.5 l skimmers

	Code	Standard Pack	Standard Weight in kg	Standard Volume in m³
Round cover, round face plate				
Beige	**05280-0600CL090**	15	8	0.069
Light grey	**05280-0600CL129**	15	8	0.069
Anthracite grey	**05280-0600CL144**	15	8	0.069
Round cover, square face plate				
Beige	**05280-0700CL090**	15	8	0.069
Light grey	**05280-0700CL129**	15	8	0.069
Anthracite grey	**05280-0700CL144**	15	8	0.069

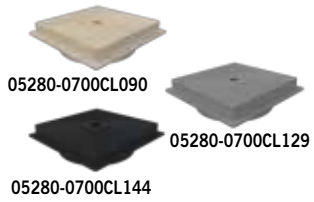



EASYCOLOR - Inlet Sheath for wide mouth skimmers

New

The EASYCOLOR inlet sheath kit allows to change the color of the skimmers wide mouth items 00251, 00252, 11304 and 11305, both the embellisher and the floater. This sheath could be installed without change the skimmer mouth what is very practical to renew or upgrade pools. This kit includes inlet sheath, floater, flanges and embellisher.

	Code	Standard Pack	Standard Weight in kg	Standard Volume in m³
Beige - inlet sheath	**74035CL090**	1	1.22	0.022
Light grey - inlet sheath	**74035CL129**	1	1.22	0.022
Anthracite grey - inlet sheath	**74035CL144**	1	1.22	0.022



15 l skimmer cover extension ring

Additional extension ring to increase the distance between the 15 l skimmer and the lid. Additional distance of 25 mm. Made of ABS. The height can be increased by overlaying various connections. It can also be slightly tipped to be level with the ground.

Code	Standard Pack	Standard Weight in kg	Standard Volume in m³
19919	17	4.08	0.069



17.5 l skimmer cover extension ring

Additional ring for better adjusting and levelling the 17.5 l skimmer lid to the deck level. Additional distance of 20 mm. Made of white ABS. The height can be increased by overlaying various connections. It can also be slightly tipped to be level with the ground.

Code	Standard Pack	Standard Weight in kg	Standard Volume in m³
18153	17	4.70	0.06

+ info
PDB Product Database
Further information on **PRODUCTS**
www.astralpool.com

CONCRETE POOL - SKIMMER ACCESSORIES



Floating weir assembly in ABS

Complete with strainer basket in white ABS.

	Code	Standard Pack	Standard Weight in kg	Standard Volume in m³
For 15 l skimmers	**00253**	12	20.5	0.207
For 17.5 l skimmers	**05703**	12	20.5	0.207



Prefilters for skimmer basket

Hygienic disposable prefilters for any type of skimmer (with baskets up to Ø 24 cm). They retain the waste that builds up in the skimmer basket. This protects the pump and the filter therefore performs better.

	Code	Standard Pack	Standard Weight in kg	Standard Volume in m³
12 units per box.	**042745**	12	0.40	0.006

CONCRETE POOL - STAINLESS STEEL 17.5 L SKIMMERS



Complies with Standard **EN 13451-1-3**

Complies with Standards **EN 16582-1** **EN 16713-2**

SLIM: High water level skimmer

New

High water level skimmer allows high water level in the pool (+/- 4 cm) giving an infinite pool effect. The water line is located very close to the top of the pool. Entirely made of AISI-316L. All models are equipped with Ø50 mm overflow and have a housing to mount a water level regulator - item 73453 - not included. Also compatible with the most standard water levels of the market. With connection for equipotential connection. It also includes flanges for prefabricated pools. Recommended flow 7.5 m³/h. Basket capacity 1.2 L.

	Code	Standard Pack	Standard Weight in kg	Standard Volume in m³
Mouth width 500 mm	**73501**	1	14.80	0.136
Mouth width 650 mm	**73502**	1	15.20	0.169

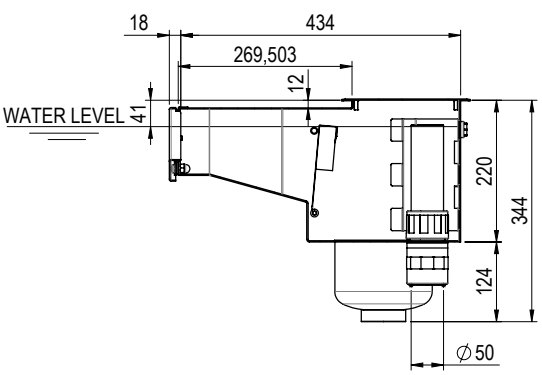

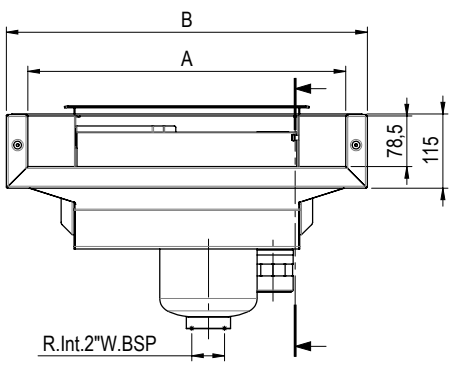

CONCRETE POOL - STAINLESS STEEL 17.5 L SKIMMERS

SLIM: Skimmer inox A-500 Large mouth



In AISI-316L stainless steel. With Ø50mm overflow, basket and lid in stainless steel, both included. It has accommodation to mount the level regulator valve 73453 (see page 88). With connection for equipotential connection. Flow recommended 7.5 m³ / h. Items 56313 and 56316 includes flanges for prefabricated pools. Also exist with 6º inclination: items 72744 and 72743 see page 112. Water level +/- 8 cm. Basket capacity 1.2L.

	Code	Standard Pack	Standard Weight in kg	Standard Volume in m³
Mouth width 500 mm	**56313**	1	14.84	0.136
Mouth width 650 mm	**56316**	1	14.84	0.136

Complies with Standard **EN 13451-1-3**

Complies with Standards **EN 16582-1** **EN 16713-2**

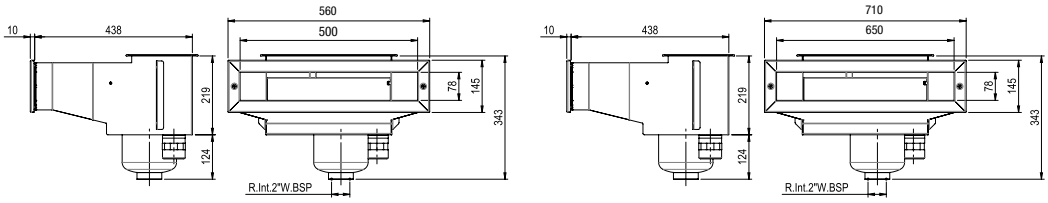

Full A-100 stainless steel skimmer



In AISI-316L stainless steel. With Ø 50mm overflow. Stainless steel basket and lid included. Basket capacity 1,2 L. Comes with housing for assembling the 00256 level regulator valve (see page 88). With connection for an equipotential outlet. Recommended flow rate: 7.5 m³/h. Does not include trim code 00255. For liner, prefabricated and panel pools use coupling kit 07525 not included.

	Code	Standard Pack	Standard Weight in kg	Standard Volume in m³
Suction connection, 2" thread	**00254**	1	8.4	0.04

Complies with Standards **EN 16582-1** **EN 16713-2**

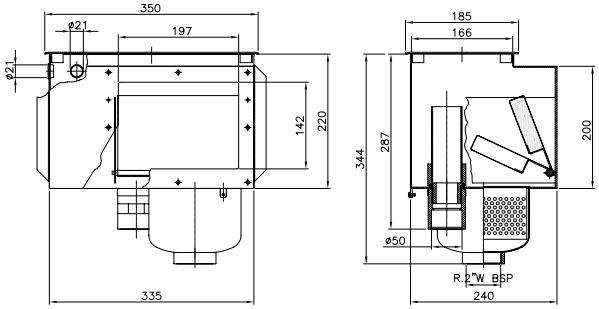

Decorative face plate



For skimmer 00254. Made of AISI-316L stainless steel.

	Code	Standard Pack	Standard Weight in kg	Standard Volume in m³
	00255	1	0.62	0.003

Complies with Standards **EN 16582-1** **EN 16713-2**

+ info PDB Product Database
Further information on **PRODUCTS**
www.astralpool.com

CONCRETE POOL - STAINLESS STEEL 17.5 L SKIMMERS



A-201 skimmer body

In AISI-316L stainless steel. With Ø 50mm overflow. Skimmer housing without telescopic lid. Comes with housing for assembling the 00256 level regulator valve (see page 88). With connection for an equipotential outlet. Basket can be removed from front. Does not include trim code 07251. Ø 63 mm suction connection. For liner, prefabricated and panel pools use coupling kit 07525 not included.

Code	Standard Pack	Standard Weight in kg	Standard Volume in m^3
07520	1	6.51	0.04

Complies with Standards
EN 16582-1
EN 16713-2

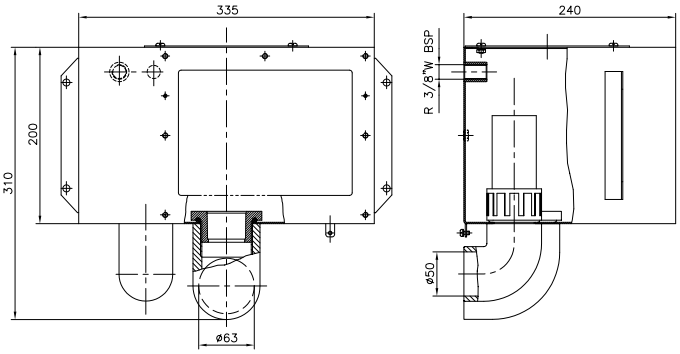



A-202 skimmer body

In AISI-316L stainless steel. With Ø 50 mm overflow. Skimmer housing without telescopic lid. With earth connection. Basket can be removed from front. Does not include trim code 07251. For liner, prefabricated and panel pools use coupling kit 07525 not included.

	Code	Standard Pack	Standard Weight in kg	Standard Volume in m^3
Ø 63 mm suction connection	**07610**	1	5.25	0.04

Complies with Standards
EN 16582-1
EN 16713-2

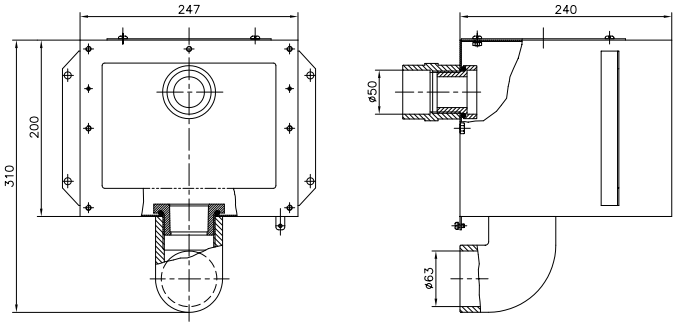



Basket for A-201 and A-202 skimmers

Basket in AISI-316L stainless steel. Includes face plate for direct removal through skimmer opening. Basket capacity 4,6L.

Code	Standard Pack	Standard Weight in kg	Standard Volume in m^3
07521	1	2.19	0.02

Complies with Standards
EN 16582-1
EN 16713-2

CONCRETE POOL - STAINLESS STEEL 17.5 L SKIMMERS



Complies with Standards
EN 16582-1
EN 16713-2

A-400 skimmer body

In AISI-316L stainless steel. With Ø 50mm overflow. Skimmer housing without telescopic lid. Comes with housing for assembling the 00256 level regulator valve (see page 88). With connection for an equipotential outlet. For liner, prefabricated and panel pools use coupling kit 07526 not included.

	Code	Standard Pack	Standard Weight in kg	Standard Volume in m³
Ø 63 mm suction connection	**07523**	1	8.0	0.06

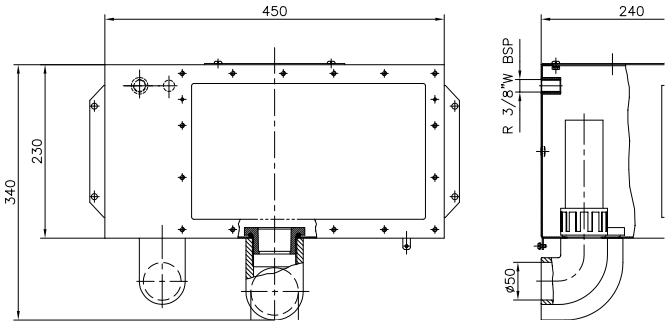



Complies with Standards
EN 16582-1
EN 16713-2

Basket for A-400 skimmer

Direct removal through skimmer throat. Wide model. In AISI-316L stainless steel. Basket capacity 11L.

Code	Standard Pack	Standard Weight in kg	Standard Volume in m³
07522	1	3.5	0.04

CONCRETE POOL - STAINLESS STEEL SKIMMER ACCESSORIES



Complies with Standard
EN 13451-1-3

Complies with Standards
EN 16582-1
EN 16713-2

Telescopic lid

In AISI-316L stainless steel. For models A-201, A-202 and A-400. 180 x 180 mm lid. Adjustable height from 60 to 110 mm.

Code	Standard Pack	Standard Weight in kg	Standard Volume in m³
07524	1	1.63	0.01

+ info PDB Product Database
Further information on **PRODUCTS**
www.astralpool.com

CONCRETE POOL - LEVEL REGULATORS



Water level regulator valve

Can be fitted to all stainless steel skimmers, except for model A-202, 56313-56316-72743-72744-73501-73502. Adjustable opening. 3/8" connection.

Code	Standard Pack	Standard Weight in kg	Standard Volume in m^3
00256	1	0.21	0.002



Universal level regulator

Made of ABS. May be connected from the bottom or side, as required. Semi-die cut outlets to the pool so that the most suitable connection can be made. Adjustable lid height and level.
For all types of skimmers.

Code	Standard Pack	Standard Weight in kg	Standard Volume in m^3
15862	1	2.0	0.016



New

Level regulating valve

Level regulator valve compatible with the stainless steel skimmers of SLIM range. Compatible with items: 56313, 56316, 72743, 72744, 73501 73502. With 3/8" side connection and adjustable floater.

Code	Standard Pack	Standard Weight in kg	Standard Volume in m^3
73453	1	0.9	0.008

POOL MAIN DRAINS INFORMATION

How affects EN 16713-02 : 2016 main drains in residential pools

	NEW POOL		POOL RENOVATION	
	Suction rate: insure a maximum of 0.5 m/s			
	ANTI-VORTEX COVER	**NON ANTI-VORTEX COVER**	**WITH MAIN DRAIN BODY CHANGE**	**UNCHANGED MAIN DRAIN BODY**
RISK OF ENTRAPMENT **How to prevent it?**	Number of main drains per pool: **1**	Number of main drains per pool: **2** balanced main drains, **distanced at minimum 1 meter.** And if any of the **2 main drain** is blocked the remaining one **should be able to absorb 100%** of the installation flow.	Applies **new pool rules**	Install an **anti-vortex grille** on pre-installed main drain
CAVITY DIMENSION	Main drain should respect a certain cavity dimensions according to a mathematical rule.			
OTHERS	Other requisites are considered to define that a main drain in compliant with EN, like design. e.g. the design of the grill to avoid human body parts or hair entrapment.			

Only with the fulfillment of all requisites of the standard, a Compliance Certification can be delivered!

*Anti-vortex plate is a special component installed in the suction line to control the turbulence in a flowing fluid. These plates allows to control the velocity of the fluid thus preventing cavitation in the fluid.

+ info PDB Product Database
Further information on **PRODUCTS**
www.astralpool.com

CONCRETE POOL - MAIN DRAINS

All main drains in the range are supplied with UV protection.
To prevent the risk of suction, install the main drains according to local regulations.
Recommended use:
- Maximum suction rate of 0.5 m/s.


56378


56378CL090


56378CL129


56378CL144

NORM main drain

Range of main drains suitable for public and private swimming pools. Supplied with flat or antivortex grilles. Manufactured in ABS with UV treatment, fitted with a 2" side outlet and a 1 ½" bottom outlet connection, bottom outlet covered by semi-die cut tab.

	Code	Standard Pack	Standard Weight in kg	Standard Volume in m³
Flat grating - White	**56378**	4	10.60	0.069
Flat grating - Beige	**56378CL090**	4	10.60	0.069
Flat grating - Light Grey	**56378CL129**	4	10.60	0.069
Flat grating - Anthracite Grey	**56378CL144**	4	10.60	0.069
Antivortex grating - White	**56379**	4	10.60	0.069
Antivortex grating - Beige	**56379CL090**	4	10.60	0.069
Antivortex grating - Light Grey	**56379CL129**	4	10.60	0.069
Antivortex grating - Anthracite Grey	**56379CL144**	4	10.60	0.069


56379

Also available in other colours

Complies with Standards
EN 16582-1
EN 16713-2

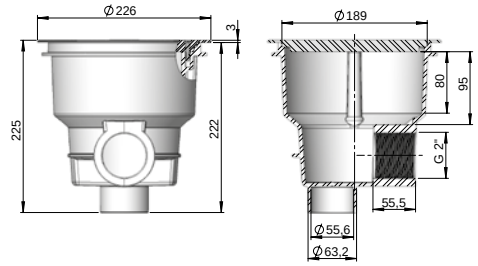

Round Ø 270 mm main drain with ABS grating



Bottom 1 ½" and side 2" outlets. Fully manufactured in white ABS. Side outlet for plug to test watertightness. Bottom outlet with plug and possibility of fitting a hydrostatic valve code 00277 (see page 94) and drainage tube code 21581, (see page 94). Ø 250mm suction grille. Max. flow rate: 13 m³/h.

	Code	Standard Pack	Standard Weight in kg	Standard Volume in m³
Standard thread	**01466**	4	5.0	0.045

Complies with Standards
EN 16582-1

Round main drains 2" outlet


01467


01467CL090


01467CL129


01467CL144

Body and grill in ABS. Grill fitted using screws. Max. flow rate: 13 m³/h.

	Code	Standard Pack	Standard Weight in kg	Standard Volume in m³
Standard thread - White	**01467**	4	2.8	0.028
Standard thread - Beige	**01467CL090**	4	2.8	0.028
Standard thread - Light Grey	**01467CL129**	4	2.8	0.028
Standard thread - Anthracite Grey	**01467CL144**	4	2.8	0.028

Complies with Standards
EN 16582-1

CONCRETE POOL - MAIN DRAINS



Round Ø 200 mm main drain with antivortex grille

Manufactured in white ABS material. 2" side outlet and 1 ½" bottom outlet. Bottom outlet covered by semi-die cut socket, which can be opened as required. Possibility of fitting drainage tube code 21581 (see page 94). Max. flow rate: 13 m³/h.

	Code	Standard Pack	Standard Weight in kg	Standard Volume in m³
Standard thread	**27837**	4	2.807	0.033

Complies with Standards
EN 16582-1



Round Ø 200 mm main drain with flat grille

Made of white ABS. 2" side outlet and 1½" bottom outlet. Bottom outlet covered by semi-die cut socket, which can be opened as required. Max. flow rate: 13 m³/h.

	Code	Standard Pack	Standard Weight in kg	Standard Volume in m³
Standard thread	**27839**	4	2.807	0.033

Complies with Standards
EN 16582-1



Main drain with square ABS grille (210 mm x 210 mm)

2" side outlet. Body and grille in white ABS. Grille fitted using screws.
Max. flow rate: 13 m³/h.

Code	Standard Pack	Standard Weight in kg	Standard Volume in m³
00258	4	4.0	0.044

Complies with Standards
EN 16582-1



Main drain grille for pool standard compliance

New

Grille to replace the grilles on already installed main drains in private pools, to meet pool regulations. Made of PP plastic. Compatible with main drains 01467, 27837, 27839.

Code	Standard Pack	Standard Weight in kg	Standard Volume in m³
74097	-	-	-

Complies with Standards
EN 16582-1

+ info PDB Product Database
Further information on **PRODUCTS**
www.astralpool.com

CONCRETE POOL - MAIN DRAINS



00268



26196

Round main drain in stainless steel. 2" outlet

2" side outlet. Made of stainless steel. AISI-316L. Grille fitted using screws. Maximum flow rate: 13 m³/h.

	Code	Standard Pack	Standard Weight in kg	Standard Volume in m³
2" side outlet"	**00268**	1	2.56	0.02
2" side outlet and 1½" bottom outlet connection	**26196**	1	2.80	0.02

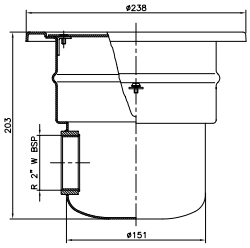



Complies with Standards
EN 16582-1
EN-16713-2

Main drain with square cover in stainless steel. Outlet 1 ½"

Bottom outlet 1 ½". Manufactured in stainless steel. AISI-316L Antivortex lid. Can be used in concrete and prefabricated pools with an 00276 adapter. Maximum flow rate: 6 m³/h.

	Code	Standard Pack	Standard Weight in kg	Standard Volume in m³
Bottom 1½" outlet	**08463**	1	1.14	0.01

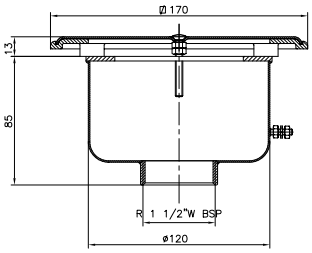



Main drain with square cover in stainless steel. 2" outlet

2" side outlet. Manufactured in stainless steel. AISI-316L. Antivortex lid. Can be used in concrete and prefabricated pools with a 00276 adapter (see page 116). Maximum flow rate: 6 m³/h.

Code	Standard Pack	Standard Weight in kg	Standard Volume in m³
00269	1	1.14	0.01



Complies with Standard
EN 13451-1/3 2012

Complies with Standards
EN 16713-02 2016

NORM main drain in polyester and fibreglass - 330 mm x 330 mm

Range of main drains manufactured in polyester resin and fibreglass. Grille in stainless steel or plastic. Optional hydrostatic valve.

			Code	Standard Pack	Standard Weight in kg	Standard Volume in m³
Grille in stainless steel						
Outlet connection to be glued	**Grille**	**Flow rate**				
Ø 75 mm	AISI-316L	15 m³/h	**20282N**	1	8	0.08
Ø 90 mm	AISI-316L	23 m³/h	**20283N**	1	9	0.08
Ø 110 mm	AISI-316L	27 m³/h	**20284N**	1	10	0.08

Minimum depth of installation: 1.5 m. Maximum recommended flow rate down drain: 103 m³/h (0.5 m/s).

CONCRETE POOL - MAIN DRAINS



Model in polyester and fibreglass - 330 mm x 330 mm

With a gelcoat finish. With optional hydrostatic valve.

Grille in stainless steel AISI-316L. Holes < 8 mm

Outlet connection to be glued	Grille	Flow rate	Code	Standard Pack	Standard Weight in kg	Standard Volume in m³
Ø 75 mm	AISI-316L	16 m³/h	**20282**	1	5	0.047
Ø 90 mm	AISI-316L	22 m³/h	**20283**	1	5	0.047
Ø 110 mm	AISI-316L	33 m³/h	**20284**	1	5	0.047

Grille in ABS plastic with protection against UV rays.

Outlet connection to be glued	Grille	Flow rate	Code	Standard Pack	Standard Weight in kg	Standard Volume in m³
Ø 75 mm	Plastic	16 m³/h	**22359**	1	4.5	0.034
Ø 90 mm	Plastic	22 m³/h	**22360**	1	4.5	0.034
Ø 110 mm	Plastic	33 m³/h	**22361**	1	4.5	0.034
Ø 125 mm	Plastic	43 m³/h	**22362**	1	4.5	0.034

Optional standard American size and antivortex in standard American size

Maximum recommended flow rate in accordance with standard EN 13451-1.



NORM main drain in polyester and fibreglass - 507 mm x 507 mm

Range of drains manufactured in polyester resin and fibreglass. Grille in AISI-316 stainless steel or plastic. Optional hydrostatic valve.

Grille in stainless steel AISI-316L

Outlet connection to be glued	Grille	Flow rate	Code	Standard Pack	Standard Weight in kg	Standard Volume in m³
Ø 110 mm	AISI-316L	42 m³/h	**20285N**	1	16	0.23
Ø 125 mm	AISI-316L	51 m³/h	**20286N**	1	17	0.23
Ø 140 mm	AISI-316L	66 m³/h	**20287N**	1	18	0.23
Ø 160 mm	AISI-316L	95 m³/h	**20288N**	1	19	0.23
Ø 200 mm	AISI-316L	103 m³/h	**20289N**	1	20	0.23

Complies with Standard **EN 13451-1/3 2012**

Complies with Standards **EN 16713-02 2016**

Minimum depth of installation: 1.5 m. Maximum recommended flow rate down drain: 103 m³/h (0.5 m/s).

Optional:
Standard American sizes

+ info PDB Product Database
Further information on **PRODUCTS**
www.astralpool.com

CONCRETE POOL - MAIN DRAINS

Model in polyester and fibreglass - 507 mm x 507 mm

With a gelcoat finish. With optional hydrostatic valve.





Outlet connection to be glued	Grille	Flow rate	Code	Standard Pack	Standard Weight in kg	Standard Volume in m³
Grille in AISI-316L stainless steel. Holes < 8 mm						
Ø 110 mm	AISI-316L	33 m³/h	**20285**	1	11.5	0.132
Ø 125 mm	AISI-316L	43 m³/h	**20286**	1	11.5	0.132
Ø 140 mm	AISI-316L	54 m³/h	**20287**	1	11.5	0.132
Ø 160 mm	AISI-316L	70 m³/h	**20288**	1	11.5	0.132
Ø 200 mm	AISI-316L	100 m³/h	**20289**	1	11.5	0.132
Grille in ABS plastic with protection against UV rays.						
Ø 110 mm	Plastic	33 m³/h	**28709**	1	11.5	0.132
Ø 125 mm	Plastic	43 m³/h	**28710**	1	11.5	0.132
Ø 140 mm	Plastic	54 m³/h	**28711**	1	11.5	0.132
Ø 160 mm	Plastic	70 m³/h	**28712**	1	11.5	0.132
Ø 200 mm	Plastic	100 m³/h	**28713**	1	11.5	0.132

Maximum recommended flow rate in accordance with standard EN 13451-1.

CONCRETE POOL - MAIN DRAIN ACCESSORIES

Hydrostatic valve



To alleviate the pressure that can build up under the pool shell due to groundwater, it is recommended that a hydrostatic valve and a drainage pipe be fitted to the main drain. Hydrostatic valve to be fitted to the 2" bottom outlet on main drains. Made of white ABS, with stainless steel screw and spring. 1½" male thread.

Code	Standard Pack	Standard Weight in kg	Standard Volume in m³
00277	50	2.63	0.01

Drainage pipe



Drainage pipe with 1½" BSP thread connection for main drains with code numbers 01466, 27837 and 27839. Made of ABS.

Code	Standard Pack	Standard Weight in kg	Standard Volume in m³
21581	24	3.54	0.021

CONCRETE POOL - MAIN DRAIN GRILLES



Flush-fit antivortex cover

Special flush-fit design that enables pool cleaners to go over it without blocking it up. Smooth slopes.

The 415 mm x 415 mm cover (25344) can be fitted to the following main drains:

With stainless steel grille:	With plastic grille:
-20282	-22359
-20283	-22360
-20284	-22361
	-22362

The 570 mm x 570 mm cover (28556) can be fitted to the following main drains:

With stainless steel grille:	With plastic grille:
-20285	-28709
-20286	-28710
-20287	-28711
-20288	-28712

	Code	Standard Pack	Standard Weight in kg	Standard Volume in m^3
415 mm x 415 mm, Height: 70 mm	**25344**	1	2.25	0.012
570 mm x 570 mm, Height: 60 mm	**28556**	1	4.00	0.032

Complies with Standard **EN 13451-1-3**

Complies with Standards **EN 16713-02 2016**



Ø 200 drain grille in ABS

Ring support and grille in white ABS. Supplied with grille fixing screws. This grille is for suction chamber done on site.

Code	Standard Pack	Standard Weight in kg	Standard Volume in m^3
00280	10	3.0	0.031

Complies with Standards **EN 16582-1**



Ø 200 drain grille in stainless steel

Support ring in white plastic, grille in AISI-316L stainless steel. Supplied with grille fixing screws. Maximum recommended flow rate: 13 m^3/h.

Code	Standard Pack	Standard Weight in kg	Standard Volume in m^3
00279	10	6.0	0.02

Complies with Standard **EN 13451-1-3**

Complies with Standards **EN 16582-1 EN 16713-2**

+ info PDB Product Database
Further information on **PRODUCTS**
www.astralpool.com

CONCRETE POOL - MAIN DRAIN GRILLES



Ø 300 drain grille in stainless steel

Support ring in aluminium, grille in AISI-316L stainless steel. Supplied with grille fixing screws. Maximum recommended flow rate: 27 m³/h.

Code	Standard Pack	Standard Weight in kg	Standard Volume in m³
00282	4	5.8	0.02



Drain grille in stainless steel

Designed for concrete pools. Support frame and grille in polished stainless steel. Supplied with fixing screws. Other sizes can be made to order.

		Code	Standard Pack	Standard Weight in kg	Standard Volume in m³
AISI-304					
Size (mm)	**Max. recommended flow rate**				
200 x 200	15 m³/h (0.5 m/s)	**00284**	1	1.2	0.01
300 x 300	43 m³/h (0.5 m/s)	**00285**	1	2.2	0.01
400 x 400	83 m³/h (0.5 m/s)	**00286**	1	4.0	0.03
500 x 500	136 m³/h (0.5 m/s)	**00287**	1	4.5	0.04
AISI-316					
Size (mm)	**Max. recommended flow rate**				
200 x 200	15 m³/h (0.5 m/s)	**30764**	1	1.2	0.01
300 x 300	43 m³/h (0.5 m/s)	**30765**	1	2.2	0.01
400 x 400	83 m³/h (0.5 m/s)	**30766**	1	4.0	0.03
500 x 500	136 m³/h (0.5 m/s)	**30767**	1	4.5	0.04

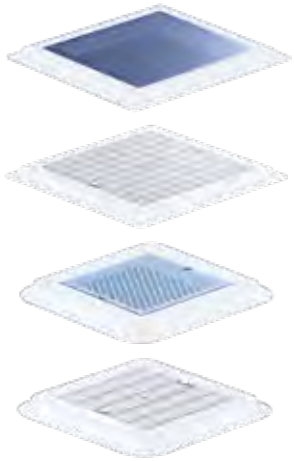

Range of drain grilles

Available in stainless steel and plastic. Frames manufactured in polyester resin and fibreglass with a gelcoat finish. Possibility of fitting antivortex lids with code numbers 25344 and 28556 (see page 95).

	Code	Standard Pack	Standard Weight in kg	Standard Volume in m³
Stainless steel drain grille 490 mm x 490 mm	**28560**	1	5.0	0.029
Plastic drain grille 490 mm x 490 mm	**28561**	1	4.7	0.029
Stainless steel drain grille 345 mm x 345 mm	**28562**	1	3.0	0.029
Plastic drain grille 345 mm x 345 mm	**28563**	1	2.9	0.029



Drain grille for private pools

Range of drain grilles for use in private and public pools. Optional grilles in plastic or stainless steel. Frames made of plastic. Excellent finish.

	Code	Standard Pack	Standard Weight in kg	Standard Volume in m³
Plastic grille 252 x 252 mm.	**34331**	1	-	0.0129
Stainless steel grille 252 x 252 mm.	**34332**	1	-	0.0129
Plastic grille 410 x 410 mm.	**34333**	1	-	0.0540
Stainless steel grille 410 x 410 mm.	**34334**	1	-	0.0540

CONCRETE POOL - ABS INLETS

MULTIFLOW SYSTEM

The inlet's eyeball is supplied pre-marked with a number of diameters (14–20 and 25). With the help of a punch (also supplied with the inlet) one of the diameters can be cut out at the time of installation.
Max. recommended flow rate for a max. flow of 4 m/s:
Ø 14 mm = 2.2 m^3/h, Ø 20 mm = 4.5 m^3/h, Ø 25 mm = 7 m^3/h








NORM return inlets

Range of inlets suitable for installation in public and private pools. Manufactured in white ABS with UV treatment.

	Code	Standard Pack	Standard Weight in kg	Standard Volume in m^3
NORM return inlet for concrete pools	**56498**	24	4.5	0.020

Complies with Standards
EN 16582-1
EN 16713-2

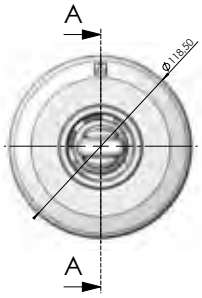

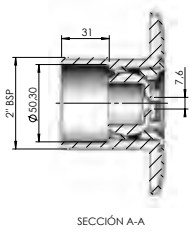

SECCIÓN A-A



Multiflow return inlet to be glued

To be glued to a Ø 50 mm PN 10 pipe. Made of white ABS.

	Code	Standard Pack	Standard Weight in kg	Standard Volume in m^3
Standard inlet	**24413**	40	4.0	0.020

Complies with Standards
EN 16582-1
EN 16713-2

+ info PDB Product Database
Further information on **PRODUCTS**
www.astralpool.com

CONCRETE POOL - ABS INLETS


00295


00295CL090


00295CL129


00295CL144

Complies with Standards
EN 16582-1
EN 16713-2

Threaded Multiflow return inlet

Outer 2" thread and Ø 50 mm inner wall to be glued. Made of ABS. Recommended for installation with wall conduits: codes 15658 and 15659.

	Code	Standard Pack	Standard Weight in kg	Standard Volume in m³
White	**00295**	24	4.35	0.020
Beige	**00295CL090**	24	4.35	0.020
Light Grey	**00295CL129**	24	4.35	0.020
Anthracite Grey	**00295CL144**	24	4.35	0.020


00298


00298CL090


00298CL129


00298CL144

Complies with Standards
EN 16582-1
EN 16713-2

Multiflow return inlet to be glued

To be glued to Ø 63 mm PN 6 outer wall and Ø 50 mm inner wall. Made of ABS. Recommended for installation with wall conduits: code numbers 15661 and 15660.

	Code	Standard Pack	Standard Weight in kg	Standard Volume in m³
White	**00298**	24	4.24	0.020
Beige	**00298CL090**	24	4.24	0.020
Light Grey	**00298CL129**	24	4.24	0.020
Anthracite Grey	**00298CL144**	24	4.24	0.020



Complies with Standards
EN 16582-1
EN 16713-2

Return inlet/suction nozzle for high flow rates

Return inlet for large flow rates that can also be used as a suction nozzle. Maximum suction flow rate of 30m³/h for a maximum flow rate speed of 4 m/s. Maximum suction flow rate of 5 m³/h for a maximum flow rate speed of 0.5 m/s. PVC body. Connection for Ø 75 or Ø 90mm pipe. Inlets can be installed into bushing 43590 (see page 123). Grille can be adjusted in any direction.

	Code	Standard Pack	Standard Weight in kg	Standard Volume in m³
Return inlet/suction nozzle for large flows and concrete pools	**41520**	16	4.20	0.021



Complies with Standards
EN 16582-1
EN 16713-2

Inlet with Ø 20 mm ball for gluing

Manufactured in white ABS. To be glued to a Ø 50 mm PN 10 pipe.

	Code	Standard Pack	Standard Weight in kg	Standard Volume in m³
Standard inlet	**33501**	50	2.9	0.020

Complies with Standards
EN 16582-1
EN 16713-2

CONCRETE POOL - ABS INLETS



Complies with Standards
EN 16582-1
EN 16713-2

Return nozzle

In weatherproof, UV-resistant ABS. 3 adjustable positions. (100%, 65%, 35%). Maximum recommended flow rate compliant with standard EN 13451-1: 13.5 m³/h. Connection: outer Ø 63 mm wall.

Code	Standard Pack	Standard Weight in kg	Standard Volume in m³
15863	24	3.4	0.020



00303



00303CL090



00303CL129



00303CL144

Complies with Standards
EN 16582-1
EN 16713-2

Pool floor return inlet

All-in-one return inlet and suction nozzle. Adjustable flow rate. Made of ABS plastic and screws in stainless steel. Maximum recommended flow rate compliant with standard EN 13451-1: 12 m³/h.

	Code	Standard Pack	Standard Weight in kg	Standard Volume in m³
Outer 2" thread, int. Ø 50 mm				
White	**00303**	24	5.0	0.020
Beige	**00303CL090**	24	5.0	0.020
Light Grey	**00303CL129**	24	5.0	0.020
Anthracite Grey	**00303CL144**	24	5.0	0.020
To glue onto Ø 63 mm PN 6, inner Ø 50 mm	**20140**	20	4.4	0.021



3" adjustable pool floor return inlet

Made of white ABS plastic. Suction. Flow rate adjusted by turning the grille. Suction surface area: 0.015 m². Outer Ø 295 mm wall. Flow rate (0.4 m/s) 20 m³/h. Max. recommended flow rate compliant with standard EN 13451-1: 26 m³/h (0.5 m/s.).

	Code	Standard Pack	Standard Weight in kg	Standard Volume in m³
Grille in AISI-304 stainless steel	**08317**	2	2.65	0.047
Grille in white ABS	**11796**	2	2.65	0.047

+ info PDB Product Database
Further information on **PRODUCTS**
www.astralpool.com

CONCRETE POOL - ABS INLETS


22353


22353CL090


22353CL129


22353CL144

Complies with Standards
EN 16582-1
EN 16713-2

Pool floor return inlet with swivel joint

Swivel body in PVC. Cover in ABS. Adjuster screw in POM. Maximum flow rate of 10 m³/h. Fits to Ø 75 mm piping and wall conduit with code number 21248.

	Code	Standard Pack	Standard Weight in kg	Standard Volume in m³
Pool floor inlet - White	**22353**	24	4.1	0.022
Pool floor inlet - Beige	**22353CL090**	24	4.1	0.022
Pool floor inlet - Light Grey	**22353CL129**	24	4.1	0.022
Pool floor inlet - Anthracite Grey	**22353CL144**	24	4.1	0.022



Wall conduit for pool floor return inlet with swivel joint (Net'n'Clean reduction piping)

Diameter of the piping adjusted to glue in inlet 22353. Connection to piping for Ø 50 mm inner wall and Ø 63 mm outer wall.

Code	Standard Pack	Standard Weight in kg	Standard Volume in m³
21248	12	7.3	0.032


00300


00300CL090


00300CL129


00300CL144

Complies with Standards
EN 16582-1
EN 16713-2

Suction nozzle

To be glued to Ø 63 mm and Ø 50 mm piping. Maximum pressure: 6 bar. Made of ABS. 1½" thread. Recommended for installation with wall conduits: code numbers 15661 and 15660.

	Code	Standard Pack	Standard Weight in kg	Standard Volume in m³
Standard inlet - White	**00300**	24	3.62	0.020
Standard inlet - Beige	**00300CL090**	24	3.62	0.020
Standard inlet - Light Grey	**00300CL129**	24	3.62	0.020
Standard inlet - Anthrachite Grey	**00300CL144**	24	3.62	0.020



Complies with Standards
EN 16582-1
EN 16713-2

Suction nozzle

Outer 2" thread, Ø 50 mm inner wall. Maximum pressure: 6 bar. Made of white ABS with 1½" threaded plug. Recommended for installation with wall conduits (codes 15658 and 15659).

	Code	Standard Pack	Standard Weight in kg	Standard Volume in m³
Standard inlet - White	**00301**	24	3.8	0.020

CONCRETE POOL - ABS INLETS

Suction nozzle



24415

Complies with Standards
EN 16582-1
EN 16713-2

To be glued to a Ø 50 PN 10 pipe. Made of white ABS with 1½" threaded plug. For end connector 07958 and push fit connector 01393. Recommended for installation with wall conduits (codes 15658 and 15659).

	Code	Standard Pack	Standard Weight in kg	Standard Volume in m³
Suction nozzle - White	**24415**	50	3.72	0.02

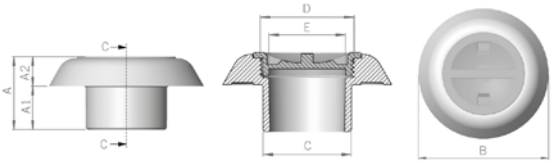

Suction inlet



To be glued to a Ø 63 mm pipe. Body and grille in ABS plastic, screws in stainless steel. Application on wall. Its characteristics make this nozzle particularly suitable for overflow channels. Maximum flow rate: 4.5 m³/h.

Code	Standard Pack	Standard Weight in kg	Standard Volume in m³
00302	12	3.1	0.016

Hydromassage kit



Made up of a return inlet and wall conduit fitted with an air inlet and a venturi. Two wall conduit lengths available. Ø 50 mm water connection pipe and Ø 20 mm air suction pipe.

		Code	Standard Pack	Standard Weight in kg	Standard Volume in m³
Hydromassage kit for concrete pools:					
Length of wall conduit 190 mm					
White		**32113**	12	3.5	0.021
Beige	New	**32113CL090**	12	3.5	0.021
Light Grey	New	**32113CL129**	12	3.5	0.021
Anthracite Grey	New	**32113CL144**	12	3.5	0.021
Length of wall conduit 280 mm					
White		**32370**	12	3.6	0.021
Beige	New	**32370CL090**	12	3.6	0.021
Light Grey	New	**32370CL129**	12	3.6	0.021
Anthracite Grey	New	**32370CL144**	12	3.6	0.021
Hydromassage kit for concrete pools with a liner:					
Length of wall conduit 190 mm					
White		**31443**	12	3.5	0.021
Beige	New	**31443CL090**	12	3.5	0.021
Light Grey	New	**31443CL129**	12	3.5	0.021
Anthracite Grey	New	**31443CL144**	12	3.5	0.021
Length of wall conduit 275 mm					
White		**32371**	8	3.5	0.021
Beige	New	**32371CL090**	8	3.5	0.021
Light Grey	New	**32371CL129**	8	3.5	0.021
Anthracite Grey	New	**32371CL144**	8	3.5	0.021

+ info
PDB Product Database
Further information on **PRODUCTS**
www.astralpool.com

CONCRETE POOL - STAINLESS STEEL INLETS



Complies with Standards
EN 16582-1
EN 16713-2

Return inlet with Ø 20 mm ball

1 ½" external thread. Manufactured in AISI-316L stainless steel. Maximum recommended flow of 4.5 m³/hour according to EN 16582-1 and EN 16713-2 standards if installed at a maximum of 500 mm below pool water level. Ø 20mm ball.

	Code	Standard Pack	Standard Weight in kg	Standard Volume in m³
Length 35 mm	**32994**	1	0.3	0.001
Length 50 mm	**16325**	1	0.3	0.001
Length 70 mm	**16326**	1	0.5	0.001



Complies with Standard
EN 13451-1-3

Complies with Standards
EN 16582-1
EN 16713-2

Return inlet with Ø 25 mm ball

1 ½" external thread. Manufactured in AISI-316L stainless steel. Maximum recommended flow according to EN 13451-3 standard: 7 m³/h. Ø 25 mm ball.

	Code	Standard Pack	Standard Weight in kg	Standard Volume in m³
Length 35 mm	**69874**	1	0.3	0.001
Length 50 mm	**69875**	1	0.3	0.001
Length 70 mm	**69876**	1	0.5	0.001



Complies with Standard
EN 13451-1-3

Complies with Standards
EN 16582-1
EN 16713-2

Adjustable pool floor return inlet

2" external thread. Made of AISI-316L stainless steel. Can be fitted in concrete and prefabricated pools. The water flow can be adjusted by loosening or tightening the central screw. Max. recommended flow rate complaint with standard EN 13451-3: 14 m³/h.

Code	Standard Pack	Standard Weight in kg	Standard Volume in m³
15839	1	0.9	0.002



Complies with Standard
EN 13451-1-3

Complies with Standards
EN 16582-1
EN 16713-2

Suction nozzle

1 ½" external thread. Manufactured in AISI-316L stainless steel. Push-fit connection 05684 required (see page 247).

	Code	Standard Pack	Standard Weight in kg	Standard Volume in m³
Length 50 mm	**16328**	1	0.2	0.001
Length with cover: 50 mm	**21644**	1	0.3	0.001

CONCRETE POOL - STAINLESS STEEL INLETS



Complies with Standard **EN 13451-1-3**

Complies with Standards **EN 16582-1** **EN 16713-2**

Adjustable return inlet

Manufactured in chrome-plated brass. Grille in AISI-316L stainless steel.

	Code	Standard Pack	Standard Weight in kg	Standard Volume in m^3
Max. flow rate: 21 m^3/h 2" inner thread	**00312**	12	7.0	0.013
Max. flow rate: 40 m^3/h 3" inner thread	**00313**	6	10.0	0.014



Complies with Standard **EN 13451-1-3**

Complies with Standards **EN 16582-1** **EN 16713-2**

Suction nozzle with sliding cover

Manufactured in chrome-plated brass. Faceplate in AISI-304L stainless steel. Pressure connection, 2" internal thread. Sleeve 01392 is needed (see page 247) couples to hose

Code	Standard Pack	Standard Weight in kg	Standard Volume in m^3
00315	12	8.0	0.008



Complies with Standard **EN 13451-1-3**

Complies with Standards **EN 16582-1** **EN 16713-2**

Suction nozzle with threaded cover

Made of chrome plated brass. Screws into 2" inner thread (01395 coupling is required for hose).

Code	Standard Pack	Standard Weight in kg	Standard Volume in m^3
00317	12	10.0	0.012

CONCRETE POOL - WALL BUSHINGS

Range of 300 mm long conduits for Ø 2" inlets and Multiflow that can be cut to different lengths, depending on the thickness of the pool wall. Made of ABS. The ribs of the end plates have holes for fitting the wall conduit to the pool structure, which makes assembly straightforward.



Wall conduit in ABS

	Code	Standard Pack	Standard Weight in kg	Standard Volume in m^3
Wall conduit with 2" rear male thread and Ø 50 mm smooth inner wall				
2" front female thread nozzles with 2" male thread	**15658**	15	4.3	0.040
Smooth Ø 59.3 mm front connection for nozzles to be glued to Ø 63 mm piping, 6-bar piping and MINI projector (code 33684)	**15661**	15	4.2	0.040
Wall conduit with smooth Ø 63 mm rear connection and smooth Ø 50 mm inner wall				
2" front female thread nozzles with 2" male thread	**15659**	15	4.2	0.040
Smooth Ø 59.3 mm front connection for nozzles to be glued to Ø 63 mm piping, 6-bar piping and MINI projector (code 33684)	**15660**	15	5.6	0.040

+ info PDB Product Database
Further information on **PRODUCTS**
www.astralpool.com

CONCRETE POOL - WALL BUSHINGS



Wall conduits in PVC

Grey PVC.

	Code	Standard Pack	Standard Weight in kg	Standard Volume in m³
150 mm long 2" outer thread + Ø 50 mm inner, 2" inner thread	**00322**	40	8.2	0.040
300 mm long 2" female and male thread connection	**00323**	20	8.9	0.040
2" rear male thread pipe connection or smooth inner wall for MINI projector (33684)	**00324**	20	8.5	0.040
2" outer thread + Ø 50 mm inner, 1½" inner thread	**00325**	20	8.4	0.040
2" outer thread + Ø 50 mm inner wall. Ø 50 mm inner wall specially for nozzles with code numbers 00289, 07957, 00304, 00305 and 00306.	**00326**	20	8.4	0.040



Stainless steel wall conduits

In AISI-304L stainless steel. Both ends with 1½" inner thread. With earth connection.

	Code	Standard Pack	Standard Weight in kg	Standard Volume in m³
Length 240 mm	**00327**	1	0.7	0.003
Length 340 mm	**00328**	1	0.8	0.005

CONCRETE POOL - WINTER ACCESSORIES



Winter plugs

For covering inlets and protecting them from freezing.

	Code	Standard Pack	Standard Weight in kg	Standard Volume in m³
For 1½" inlets	**53849**	-	-	-
For 2" inlets	**06212**	-	-	-

Choice of cover colours for skimmers

LINER AND PREFABRICATED POOL - 15 L SKIMMERS

All of the components that are exposed in this range of skimmers come with a UV treatment. Made of ABS, they come with a weir flap and a flow regulator check valve. Bottom suction nozzle connection: 1½" inner thread, 2" outer thread. Simultaneous connection to the main drain: Ø 50 mm inner wall. Overflow connection: Ø 40 mm. Leaf trap. Recommended flow rate: 7.5 m³/h. It is recommended that one skimmer be installed for every 25 m² of water surface area. All skimmers come in two different models: the model with inserts and the PARKER model, which is supplied with self-tapping screws.

Skimmer with standard mouth opening



Complies with Standards
EN 16582-1
EN 16713-2

Supplied with adhesive gasket, bi-injection moulded frame, flange and screws.

	Code	Standard Pack	Standard Weight in kg	Standard Volume in m³
Comes with round snap-on cover				
White	**01461**	1	4.0	0.059
Beige	**01461CL090**	1	4.0	0.059
Light Grey	**01461CL129**	1	4.0	0.059
Anthracite Grey	**01461CL144**	1	4.0	0.059
Comes with square snap-on cover				
White	**01462**	1	4.2	0.059

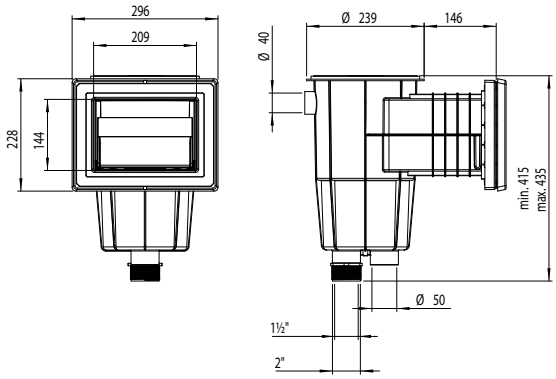

Skimmer with wide mouth opening



34413



34413CL090



34413CL129



34413CL144

Complies with Standards
EN 16582-1
EN 16713-2

Supplied with adhesive gaskets, flange and screws.

	Code	Standard Pack	Standard Weight in kg	Standard Volume in m³
Round cover, small embellisher				
White	**01463**	1	5.28	0.12
Square cover with round faceplate, small embellisher				
White	**01464**	1	5.28	0.12
Square cover with square faceplate, big embellisher that covers the flange				
White	**34413**	1	5.04	0.12
Beige	**34413CL090**	1	5.04	0.12
Light Grey	**34413CL129**	1	5.04	0.12
Anthracite Grey	**34413CL144**	1	5.04	0.12

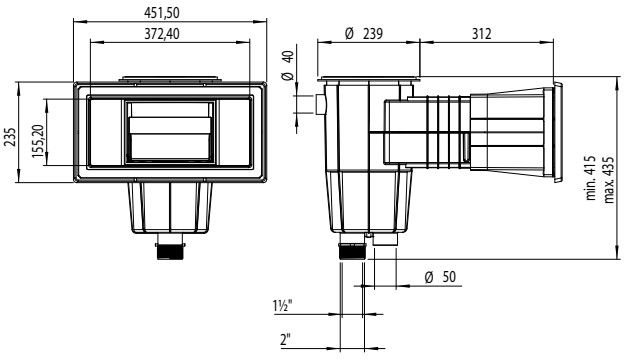

+ info PDB Product Database
Further information on **PRODUCTS**
www.astralpool.com

LINER AND PREFABRICATED POOL - 15 L SKIMMERS



Complies with Standards
EN 16582-1
EN 16713-2

Skimmer for polyester pools with wide mouth

15L skimmer, square cover. This skimmer doesn't include gaskets. The installer should insure water tightness of skimmer mouth.

	Code	Standard Pack	Standard Weight in kg	Standard Volume in m^3
White	**06470**	1	4.32	0.12
Beige	**06470CL090**	1	4.32	0.12
Light Grey	**06470CL129**	1	4.32	0.12
Anthracite Grey	**06470CL144**	1	4.32	0.12



Double gasket kits for skimmers

Kits made up of a double gasket and the screws necessary for the installation of skimmers in panel pools. Made of TPE, the kit enables the installation of various accessories in pool shells and protects the panelling from coming into contact with water. Easy to install. Prevents corrosion of the panelling in the area that has been die cut.

	Code	Standard Pack	Standard Weight in kg	Standard Volume in m^3
Inserts for wide openings	**14516-0500**	50	-	0.070
Self-tapping screws for wide openings	**14516-0600**	50	-	0.070
Inserts for standard openings	**27124-0500**	80	-	0.035
Self-tapping screws for standard openings	**27124-0600**	80	-	0.035
Inserts for Norm openings	**57289-0500**	40	-	0.070
Self-tapping screws for Norm openings	**57289-0600**	40	-	0.070



Complies with Standards
EN 16582-1
EN 16713-2

Panel Protect skimmer inside assembly

Supplied with adhesive gaskets, flange and screws. Skimmers specially designed for panel pools. The wide opening assembly should be fitted to the panel from the inside. Supplied with glue. Item 30866 is compatible with EASYCOLOR Inlet sheath item 73166CLXXX to an easy color change of the skimmer embellisher and the floater. This sheath could be installed without change the skimmer mouth what is very practical to renew or upgrade pools.

	Code	Standard Pack	Standard Weight in kg	Standard Volume in m^3
15 l Panel Protect skimmer wide opening, square cover	**30866**	1	5.13	0.116
Glue for ABS	**30884**	1	0.20	0.001



73166CL129





73166CL1144

73166CL090

LINER AND PREFABRICATED POOL - 17.5 L SKIMMERS



73159

73162



73166CL129

73166CL1144

73166CL090

Filtering skimmer

17.5L skimmer with cartridge system integrated. Made of ABS with UV treatment. Incorporate gate, regulator lid height, skimmer basket and 2 cartridge filters. Upper Access wáter connection Ø 32 m, bottom connections of Ø 63 mm and lateral of Ø 50 mm. Lateral connections are for connecting suction nozzles.
The color change is proposed with an inlet sheath, both the embellisher and the floater. This sheath could be installed without change the skimmer mouth what is very practical to renew or upgrade pools.

	Code	Standard Pack	Standard Weight in kg	Standard Volume in m³
Prefabricated pools - white(1)				
Filtering skimmer with 2 cartridges 16m³	**73159**	1	12	0.32
Filtering skimmer with 2 cartridges 20m³	**73162**	1	13	0.32
Panels pools - white				
Filtering skimmer with 2 cartridges 16m³	**73160**	1	12.5	0.32
Filtering skimmer with 2 cartridges 20m³	**73163**	1	13.5	0.32
EASYCOLOR - Inlet sheath(2)				
Light Grey - inlet sheath	**73166CL129**	1	1.22	0.02
Anthracite - inlet sheath	**73166CL144**	1	1.22	0.02
Beige - inlet sheath	**73166CL090**	1	1.22	0.02
Cartridge(3)				
Cartridge 16 m³/h - 15 microns	**73164**	1	1.64	0.02
Cartridge 20 m³/h - 15 microns	**73165**	1	2.24	0.026



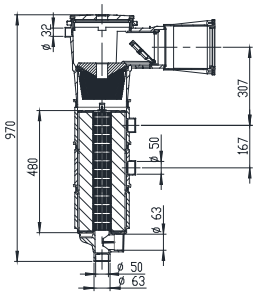

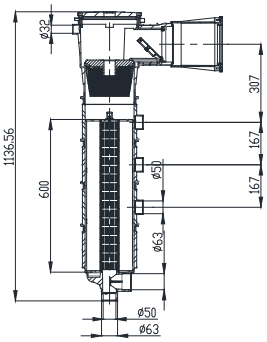

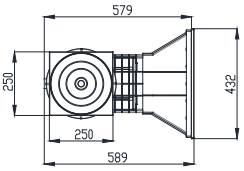

Complies with Standards **EN 16713-1**

Complies with Standards **EN 16582-1** **EN 16713-2**

(1) Codes 73159 and 73162 will be delivered with 2 sets of screws – DIN 7982 A4 5.5x25 and 32.
(2) Also compatible with skimmers 30866, 30867 and 34413
(3) 2-year limited warranty - please refer to the instruction manual

+ info
PDB Product Database
Further information on **PRODUCTS**
www.astralpool.com

LINER AND PREFABRICATED POOL - 17.5 L SKIMMERS

All of the components that are exposed in this range of skimmers come with a UV treatment. Made of ABS, they come with a weir flap and a flow regulator check valve. Bottom suction nozzle connection: 1½" inner thread, 2" outer thread. Simultaneous connection to the main drain: Ø 50 mm inner wall. Overflow connection: Ø 40 mm. Leaf trap. Recommended flow rate: 7.5 m³/h. It is recommended that one skimmer be installed for every 25 m² of water surface area. All skimmers come in two different models: the model with inserts and the PARKER model, which is supplied with self-tapping screws.





UNE-EN 16582-1
Complies with Standards
EN 16582-1

Skimmer SPS 250

PANELS 250

Range of 17L skimmers suitable for installation in residential pools. The short length of 250 mm makes them ideal for installation in pools made from expanded polystyrene blocks. Their configuration also takes the water level up to the edge of the coping stone. Manufactured in ABS with UV protection, the SPS 250 comes with a weir flap, flow regulator and basket. Recommended flow rate of 7.5 m³/h. Install one skimmer every 25 m² of water line surface area. Connections under Ø 63mm and 2", water overflow connection of Ø 32 mm.

	Code	Standard Pack	Standard Weight in kg	Standard Volume in m³
Skimmer with inserts	**58382**	1	3.50	0.037

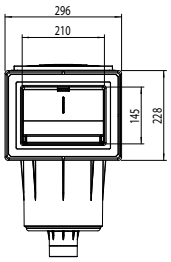

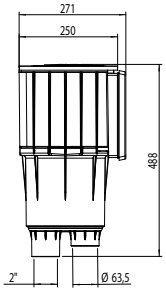

NORM skimmer

POLYESTER PANELS +LINER CONCRETE +LINER

17.5L skimmer range suitable for installation in public and private pools. Manufactured in ABS with UV treatment, it comes with a weir flap, flow regulator, lid height regulation and basket. The water inlet is 495 x 80 mm. Recommended flow rate of 7.5 m³/h. Install one skimmer every 25 m² of water line surface area. Connections under 1 ½" and 2", water overflow connection of Ø 40 mm.



56176



56176CL090



56176CL129



56176CL144

	Code	Standard Pack	Standard Weight in kg	Standard Volume in m³
For prefabricated pools with inserts				
White	**56176**	1	5.61	0.182
Beige	**56176CL090**	1	5.61	0.182
Light Grey	**56176CL129**	1	5.61	0.182
Anthracite Grey	**56176CL144**	1	5.61	0.182
For prefabricated pools without inserts				
White	**56299**	1	5.61	0.182
Beige	**56299CL090**	1	5.61	0.182
Light Grey	**56299CL129**	1	5.61	0.182
Anthracite Grey	**56299CL144**	1	5.61	0.182
NORM 6º for prefabricated pools with inserts (New)	**57114**	1	5.61	0.182
NORM 6º for prefabricated pools without inserts	**66664**	1	5.61	0.182

UNE-EN 16582-1 EN 16713-2
Complies with Standards
EN 16582-1
EN 16713-2

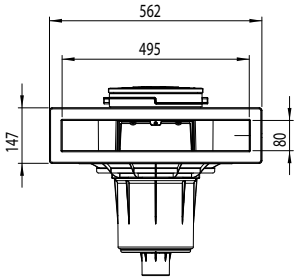

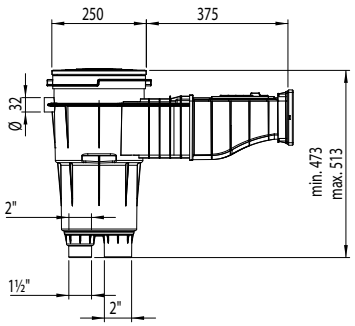

LINER AND PREFABRICATED POOL - 17.5 L SKIMMERS

Skimmer with standard mouth opening





11309CL090



11309CL129



11309CL144

Supplied with adhesive gaskets, flange and screws.

	Code	Standard Pack	Standard Weight in kg	Standard Volume in m³
Skimmer with square cover				
White	**11309**	1	5.30	0.062
Beige	**11309CL090**	1	5.30	0.062
Light Grey	**11309CL129**	1	5.30	0.062
Anthracite Grey	**11309CL144**	1	5.30	0.062
Skimmer 6° for polyester pool with square cover, with inserts				
White	**35664**	1	6.00	0.062
Skimmer 6° for polyester pool with round cover, without inserts				
White	**68108**	1	6.00	0.062
Beige	**68108CL090**	1	6.00	0.062
Light grey	**68108CL129**	1	6.00	0.062
Anthracite grey	**681CL144**	1	6.00	0.062

Complies with Standards
EN 16582-1
EN 16713-2

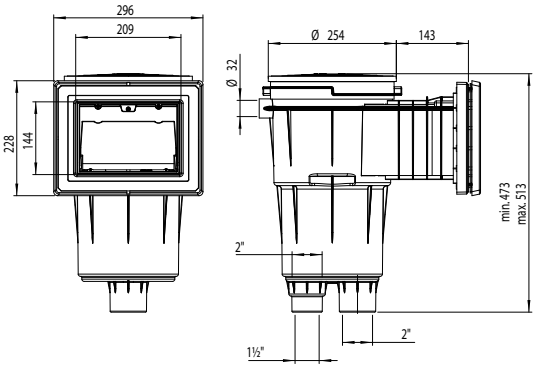

Skimmer with standard opening and extended throat





11310CL090



11310CL129



11310CL144

Supplied with adhesive gaskets, flange and screws.

	Code	Standard Pack	Standard Weight in kg	Standard Volume in m³
With square cover				
White	**11310**	1	5.90	0.077
Beige	**11310CL090**	1	5.90	0.077
Light Grey	**11310CL129**	1	5.90	0.077
Anthracite Grey	**11310CL144**	1	5.90	0.077
With square cover for PARKER models*				
White*	**11316**	1	5.90	0.077
Beige*	**11316CL090**	1	5.90	0.077
Light Grey*	**11316CL129**	1	5.90	0.077
Anthracite Grey*	**11316CL144**	1	5.90	0.077

Complies with Standards
EN 16582-1
EN 16713-2

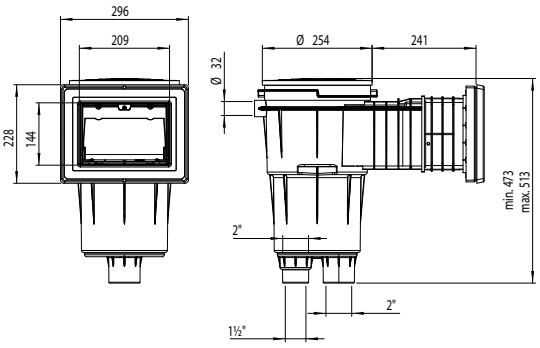

* Available untill end of stocks

+ info PDB Product Database
Further information on **PRODUCTS**
www.astralpool.com

LINER AND PREFABRICATED POOL - 17.5 L SKIMMERS

Skimmer with wide mouth opening

Supplied with adhesive gaskets, flange and screws.

	Code	Standard Pack	Standard Weight in kg	Standard Volume in m³
With square cover - White	**11311**	1	6.52	0.135
With square cover - Beige	**11311CL090**	1	6.52	0.135
With square cover - Light Grey	**11311CL129**	1	6.52	0.135
With square cover - Anthracite Grey	**11311CL144**	1	6.52	0.135
With square cover for PARKER models - White	**11317**	1	6.52	0.135
With square cover for PARKER models - Beige	**11317CL090**	1	6.52	0.135
With square cover for PARKER models - Light Grey	**11317CL129**	1	6.52	0.135
With square cover for PARKER models - Anthracite Grey	**11317CL144**	1	6.52	0.135
With square cover - 6° for polyester pool- White	**35665**	1	6.12	0.135





11311CL090



11311CL129



11311CL144

Complies with Standards
EN 16582-1
EN 16713-2

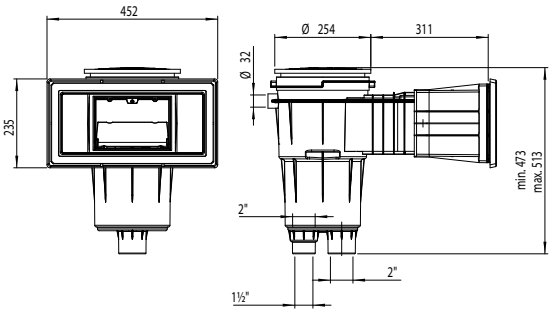

Skimmer with wide opening and extended throat

Supplied with adhesive gaskets, flange and screws.

	Code	Standard Pack	Standard Weight in kg	Standard Volume in m³
Square cover	**11313**	1	7.00	0.161
Square cover for PARKER models	**11314**	1	7.00	0.161



Complies with Standards
EN 16582-1
EN 16713-2

Panel Protect skimmer inside assembly

Skimmers for panel pools. The wide opening assembly should be fitted to the panel from the inside. Supplied with glue. Item 30867 is compatible with EASYCOLOR Inlet sheath item 73166CLXXX to an easy color change of the skimmer embellisher and the floater. This sheath could be installed without change the skimmer mouth what is very practical to renew or upgrade pools.

	Code	Standard Pack	Standard Weight in kg	Standard Volume in m³
17.5 l Panel Protect skimmer wide opening, square cover	**30867**	1	6.20	0.116
Glue for ABS	**30884**	25	5.05	0.12



Complies with Standards
EN 16582-1
EN 16713-2



73166CL129



73166CL090



73166CL1144

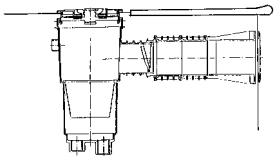

The 17.5 litre skimmer can be made to order with much larger throat extensions than the standard size. This can be particularly useful if wider coping stones than usual are installed.

LINER AND PREFABRICATED POOL - SKIMMER ACCESSORIES



Covers for 15 l skimmers

	Code	Standard Pack	Standard Weight in kg	Standard Volume in m³
Round cover, round face plate				
Beige	**00249-0600CL090**	23	7.9	0.069
Light Grey	**00249-0600CL129**	23	7.9	0.069
Anthracite Grey	**00249-0600CL144**	23	7.9	0.069
Round cover, square face plate				
Beige	**00249-0700CL090**	13	6.9	0.069
Light Grey	**00249-0700CL129**	13	6.9	0.069
Anthracite Grey	**00249-0700CL144**	13	6.9	0.069

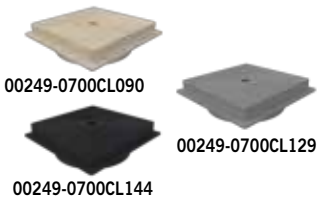



Covers for 17.5 l skimmers

	Code	Standard Pack	Standard Weight in kg	Standard Volume in m³
Round cover, round face plate				
Beige	**05280-0600CL090**	15	8	0.069
Light Grey	**05280-0600CL129**	15	8	0.069
Anthracite Grey	**05280-0600CL144**	15	8	0.069
Round cover, square face plate				
Beige	**05280-0700CL090**	15	8	0.069
Light Grey	**05280-0700CL129**	15	8	0.069
Anthracite Grey	**05280-0700CL144**	15	8	0.069

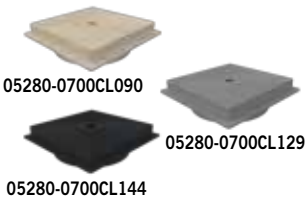



EASYCOLOR - Inlet Sheath for wide mouth skimmers

New

The EASYCOLOR inlet sheath kit allows to change the color of the skimmers wide mouth items 01463, 01464, 11311, 11313, 11314 and 11317, both the embellisher and the floater. This sheath could be installed without change the skimmer mouth what is very practical to renew or upgrade pools. This new kit includes inlet sheath, floater, flanges and embellisher.

	Code	Standard Pack	Standard Weight in kg	Standard Volume in m³
Beige - inlet sheath	**74035CL090**	1	1.22	0.02
Light Grey - inlet sheath	**74035CL129**	1	1.22	0.02
Anthracite Grey - inlet sheath	**74035CL144**	1	1.22	0.02

+ info
PDB Product Database
Further information on **PRODUCTS**
www.astralpool.com

LINER AND PREFABRICATED POOL - 17.5 L STAINLESS STEEL SKIMMER



SLIM: Skimmer inox A-500 Large mouth

In AISI-316L stainless steel. With Ø50mm overflow, basket and lid in stainless steel, both included. It has accommodation to mount the level regulator valve 73453 (see page 88). With connection for equipotential connection. Flow recommended 7.5 m³ / h. Water level +/- 8 cm. basket capacity 1,2L.

	Code	Standard Pack	Standard Weight in kg	Standard Volume in m³
Mouth width 500 mm, 6º inclination	**72744**	1	14.84	0.136
Mouth width 650 mm, 6º inclination	**72743**	1	14.84	0.136

Complies with Standard **EN 13451-1-3**

Complies with Standards **EN 16582-1** **EN 16713-2**

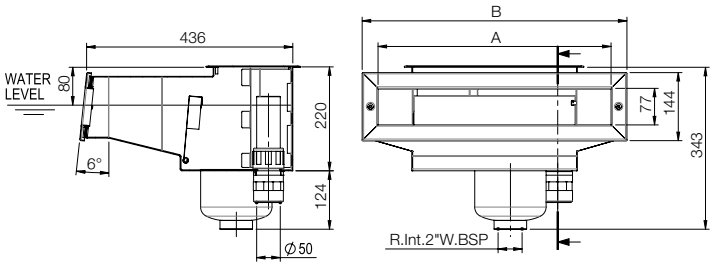

COD	A (mm)	B (mm)
72743	650	710
72744	500	560

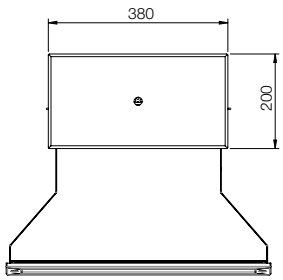

LINER AND PREFABRICATED POOL - ACCESSORIES FOR STAINLESS STEEL SKIMMERS



Coupling kit for stainless steel skimmers

For liner, prefabricated and panel pools. Includes: 2 elastic gaskets, AISI-316 stainless steel frame and screws for assembling.

	Code	Standard Pack	Standard Weight in kg	Standard Volume in m³
For A-100, A-201 and A-202 skimmers (00254. 07520 and 07610)	**07525**	1	0.78	0.002
For A-400 skimmer (code 07523)	**07526**	1	1.13	0.01

Complies with Standards **EN 16582-1** **EN 16713-2**

POOL MAIN DRAINS INFORMATION

How affects EN 16713-02 : 2016 main drains in residential pools

	NEW POOL		POOL RENOVATION	
	Suction rate: insure a maximum of 0.5 m/s			
	ANTI-VORTEX COVER	**NON ANTI-VORTEX COVER**	**WITH MAIN DRAIN BODY CHANGE**	**UNCHANGED MAIN DRAIN BODY**
RISK OF ENTRAPMENT How to prevent it?	Number of main drains per pool: **1**	Number of main drains per pool: **2** balanced main drains, **distanced at minimum 1 meter.** And if any of the **2 main drain** is blocked the remaining one **should be able to absorb 100%** of the installation flow.	Applies **new pool rules**	Install an **anti-vortex grille** on pre-installed main drain
CAVITY DIMENSION	Main drain should respect a certain cavity dimensions according to a mathematical rule.			
OTHERS	Other requisites are considered to define that a main drain in compliant with EN, like design. e.g. the design of the grill to avoid human body parts or hair entrapment.			

Only with the fulfillment of all requisites of the standard, a Compliance Certification can be delivered!

*Anti-vortex plate is a special component installed in the suction line to control the turbulence in a flowing fluid. These plates allows to control the velocity of the fluid thus preventing cavitation in the fluid.

+ info PDB Product Database
Further information on **PRODUCTS**
www.astralpool.com

LINER AND PREFABRICATED POOL - MAIN DRAINS

All main drains in the range are supplied with UV protection.
To prevent the risk of suction, install the main drains according to local regulations.
Recommended use:
- Maximum suction rate of 0.5 m/s.


56380


56382CL090


56382


56382CL144


56382CL129

Complies with Standards
EN 16582-1
EN 16713-2

NORM main drain

Range of main drains suitable for installation in public and private pools. Supplied with flat or antivortex grilles. Manufactured in ABS with UV treatment, fitted with a 2" side outlet and a 1 ½" bottom outlet connection, bottom outlet covered by semi-die cut tab.

	Code	Standard Pack	Standard Weight in kg	Standard Volume in m³
Flat grating with inserts				
White	**56380**	4	10.60	0.069
Beige	**56380CL090**	4	10.60	0.069
Light Grey	**56380CL129**	4	10.60	0.069
Anthracite Grey	**56380CL144**	4	10.60	0.069
Flat grating without inserts				
White	**56381**	4	10.60	0.069
Beige	**56381CL090**	4	10.60	0.069
Light Grey	**56381CL129**	4	10.60	0.069
Anthracite Grey	**56381CL144**	4	10.60	0.069
Antivortex grating with inserts				
White	**56382**	4	10.60	0.069
Beige	**56382CL090**	4	10.60	0.069
Light Grey	**56382CL129**	4	10.60	0.069
Anthracite Grey	**56382CL144**	4	10.60	0.069
Antivortex grating without inserts				
White	**56383**	4	10.60	0.069
Beige	**56383CL090**	4	10.60	0.069
Light Grey	**56383CL129**	4	10.60	0.069
Anthracite Grey	**56383CL144**	4	10.60	0.069



Complies with Standards
EN 16582-1

Mini main drain

Side outlet drain assembly with 2" inner thread. Made of white ABS with grille fixed to flange. Suction velocity at grille of 0.5 m/s and flow rate of 11 m³/h. The slots in the grille are no larger than 8 mm, in compliance with regulations. M5 screws and brass inserts for fastening the flange and grille. Can be used in concrete spas and side suction inlets.

	Code	Standard Pack	Standard Weight in kg	Standard Volume in m³
Mini main drain - White	**27814**	4	2.64	0.013



Complies with Standards
EN 16582-1

Ø 290 mm main drain for liner pools. PARKER model

2" side outlet and 1½" bottom outlet. Specially for liner pools. Built completely in white ABS. Comes with screws in stainless steel and synthetic adhesive gaskets. Side outlet for plug for testing water tightness. Bottom outlet for plug for fitting a hydrostatic valve code 00277 (see page 94) and drainge tube code 21581 (see page 94). Suction speed of 0.5 m/s. Maximum recommended flow rate: 13 m³/h. Fitted flush to pool floor for total drainage.

	Code	Standard Pack	Standard Weight in kg	Standard Volume in m³
Main drain of ø 290 mm for liner pool	**00270**	4	5.71	0.044
Parker model (with self-tapping screws)	**07880**	4	5.71	0.044

Complies with Standards
EN 16582-1

LINER AND PREFABRICATED POOL - MAIN DRAINS



Complies with Standards
EN 16582-1

Round Ø 200 mm main drain with antivortex grille

Made of white ABS. 2" side outlet and 1½" bottom outlet. Bottom outlet covered by a semi-die cut tab, which may be removed if necessary. A drainage pipe (code drainage code 21581, see page 94). Max. flow rate: 13 m³/h.

Code	Standard Pack	Standard Weight in kg	Standard Volume in m³
27125	4	3.543	0.033



Complies with Standards
EN 16582-1

Round Ø 200 mm main drain with flat grille

Made of white ABS. 2" side outlet and 1½" bottom outlet. Bottom outlet covered by a semi-die cut tab, which may be removed if necessary. A drainage pipe (code drainage code 21581, see page 94). Max. flow rate: 13 m³/h.

Code	Standard Pack	Standard Weight in kg	Standard Volume in m³
27838	4	3.391	0.033



Complies with Standards
EN 16582-1

Ø 210 mm main drain with ABS grille

2" side outlet. Body and grille in ABS. Comes with self-adhesive gaskets, flange and screws. Maximum recommended flow rate: 13 m³/h.

	Code	Standard Pack	Standard Weight in kg	Standard Volume in m³
Ø 210 mm main drain with ABS grille				
White	**00271**	4	4.0	0.033
Beige	**00271CL090**	4	4.0	0.033
Light Grey	**00271CL129**	4	4.0	0.033
Anthracite Grey	**00271CL144**	4	4.0	0.033
Ø 210 mm main drain with ABS grille, Parker				
White	**06474**	4	4.0	0.033
Beige	**06474CL090**	4	4.0	0.033
Light Grey	**06474CL129**	4	4.0	0.033
Anthracite Grey	**06474CL144**	4	4.0	0.033



Complies with Standards
EN 16582-1

Main drain grille for pool standard compliance

New

Grille to replace the grilles on already installed main drains in private pools, to meet pool regulations. Made of PP plastic. Compatible with main drains 00270, 00271, 06474 and 07880.

Code	Standard Pack	Standard Weight in kg	Standard Volume in m³
74097	4	-	-

+ info
PDB Product Database
Further information on **PRODUCTS**
www.astralpool.com

LINER AND PREFABRICATED POOL - MAIN DRAINS



Complies with Standards
EN 16582-1

Square 210 mm x 210 mm main drain with ABS grille

With 2" side outlet. Body and grille in ABS. Comes with self-adhesive gaskets, flange and screws. Maximum recommended flow rate: 13 m³/h.

Code	Standard Pack	Standard Weight in kg	Standard Volume in m³
00273	4	5.5	0.043



Round main drain in stainless steel

2" side outlet. Made of AISI-316L stainless steel. Grille fitted using screws. Comes with gaskets, flange and screws. Maximum recommended flow rate: 13 m³/h.

	Code	Standard Pack	Standard Weight in kg	Standard Volume in m³
2" side outlet"	**00275**	1	2.27	0.02
2" side outlet and 1½" bottom outlet connections.	**26197**	1	4.23	0.04

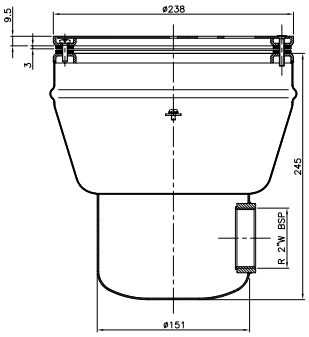



Adaptor kit for main drain

For main drain 00269. Comes with gaskets, flange and screws. Flange in AISI-316L stainless steel.

Code	Standard Pack	Standard Weight in kg	Standard Volume in m³
00276	40	9.7	0.01



Complies with Standard
EN 13451-1-3

Complies with Standards
EN 16713-02 2016

NORM main drain in polyester and fibreglass - 350 mm x 350 mm

Range of main drains manufactured in polyester resin and fibreglass. Grille in stainless steel or plastic. Optional hydrostatic valve.

Grille in stainless steel

Outlet connection to be glued	Grille	Flow rate	Code	Standard Pack	Standard Weight in kg	Standard Volume in m³
Ø 75 mm	AISI-316L	15 m³/h	**20074N**	1	8	0.08
Ø 90 mm	AISI-316L	23 m³/h	**20075N**	1	9	0.08
Ø 110 mm	AISI-316L	27 m³/h	**20290N**	1	10	0.08

Minimum depth of installation: 1.5 m.
Maximum recommended flow rate down drain: 103 m³/h (0.5 m/s).

Optional standard American size and antivortex in standard American size

LINER AND PREFABRICATED POOL - MAIN DRAINS



Complies with Standard **EN 13451-1-3**

Complies with Standards **EN 16713-02:2016**

Optional standard American size and antivortex in standard American size

NORM main drain in polyester and fibreglass - 507 mm x 507 mm

Range of main drains manufactured in polyester resin and fibreglass. Grille in stainless steel or plastic. Optional hydrostatic valve.

Outlet connection to be glued	Grille	Flow rate	Code	Standard Pack	Standard Weight in kg	Standard Volume in m³
Grille in stainless steel						
Ø 110 mm	AISI-316L	42 m³/h	**20076N**	1	16	0.23
Ø 125 mm	AISI-316L	51 m³/h	**20077N**	1	17	0.23
Ø 140 mm	AISI-316L	66 m³/h	**20078N**	1	18	0.23
Ø 160 mm	AISI-316L	95 m³/h	**20079N**	1	19	0.23
Ø 200 mm	AISI-316L	103 m³/h	**20291N**	1	20	0.23

Minimum depth of installation: 1.5 m.
Maximum recommended flow rate down drain: 103 m³/h (0.5 m/s).





Main drain in polyester and fibreglass - 350 mm x 350 mm

Made of fibreglass-reinforced polyester. With a gelcoat finish. Comes with gaskets, flange and screws. Holes < 8 mm. Outlet connection to be glued. With optional hydrostatic valve.

Outlet connection to be glued	Grille	Flow rate	Code	Standard Pack	Standard Weight in kg	Standard Volume in m³
Grille in AISI-316L stainless steel						
Ø 75 mm	AISI-316L	16 m³/h	**20074**	1	6.5	0.047
Ø 90 mm	AISI-316L	22 m³/h	**20075**	1	6.5	0.047
Ø 110 mm	AISI-316L	33 m³/h	**20290**	1	6.5	0.047

Max. recommended flow rate: 33.5 m³/h (0.5 m/s)
Recommended flow rate: 20 m³/h (0.3 m/s)

Grille in ABS plastic with protection against UV rays.

Outlet connection to be glued	Grille	Flow rate	Code	Standard Pack	Standard Weight in kg	Standard Volume in m³
Ø 75 mm	Plastic	18 m³/h	**22416**	1	6.5	0.047
Ø 90 mm	Plastic	27 m³/h	**22417**	1	6.5	0.047
Ø 110 mm	Plastic	42 m³/h	**22418**	1	6.5	0.047
Ø 125 mm	Plastic	45 m³/h	**22419**	1	6.5	0.047

Optional:
Standard American sizes

Max. recommended flow rate: 45 m³/h (0.5 m/s)
Recommended flow rate: 27 m³/h (0.3 m/s)

+ info PDB Product Database
Further information on **PRODUCTS**
www.astralpool.com

LINER AND PREFABRICATED POOL - MAIN DRAINS



Main drain in polyester and fibreglass - 507 mm x 507 mm

With a gelcoat finish. Grille in AISI-316L stainless steel. Comes with gaskets, flanges and screws. Holes < 8 mm. Outlet connection to be glued. Recommended flow rate: 62 m³/h (0.3 m/s). Max. recommended flow rate: 103 m³/h (0.5 m/s.). With optional hydrostatic valve.

Grille in AISI-316L stainless steel

Outlet connection to be glued	Grille	Flow rate	Code	Standard Pack	Standard Weight in kg	Standard Volume in m³
Ø 110 mm	AISI-316L	42 m³/h	**20076**	1	1.4	0.132
Ø 125 mm	AISI-316L	51 m³/h	**20077**	1	1.4	0.132
Ø 140 mm	AISI-316L	66 m³/h	**20078**	1	1.4	0.132
Ø 160 mm	AISI-316L	95 m³/h	**20079**	1	1.4	0.132
Ø 200 mm	AISI-316L	103 m³/h	**20291**	1	1.4	0.132

Grille in ABS plastic with protection against UV rays.

Outlet connection to be glued	Grille	Flow rate	Code	Standard Pack	Standard Weight in kg	Standard Volume in m³
Ø 110 mm	Plastic	42 m³/h	**28722**	1	1.4	0.132
Ø 125 mm	Plastic	51 m³/h	**28723**	1	1.4	0.132
Ø 140 mm	Plastic	66 m³/h	**28724**	1	1.4	0.132
Ø 160 mm	Plastic	95 m³/h	**28725**	1	1.4	0.132
Ø 200 mm	Plastic	103 m³/h	**28726**	1	1.4	0.132

LINER AND PREFABRICATED POOL - MAIN DRAIN ACCESSORIES



Hydrostatic valve

To alleviate the pressure that can build up under the pool shell due to groundwater, it is recommended that a hydrostatic valve and a drainage pipe be fitted to the main drain. Hydrostatic valve to be fitted to the 2" bottom outlet on main drains. Made of white ABS, with stainless steel screw and spring. 1½" male thread.

Code	Standard Pack	Standard Weight in kg	Standard Volume in m³
00277	50	2.63	0.01



Drainage pipe

Drainage tube with 1½" BSP thread connection for drains 00270 and 07880 (see page 114), 27838 (see page 91), 26197 (see page 116) y 27125 (see page 91). Manufactured in ABS.

Code	Standard Pack	Standard Weight in kg	Standard Volume in m³
21581	24	3.54	0.021

LINER AND PREFABRICATED POOL - MAIN DRAIN ACCESSORIES







Complies with Standard **EN 13451-1:2000**

Complies with Standards **EN 16713-02 2016**

Flush-fit antivortex cover

Special flush-fit design that enables pool cleaners to go over it without blocking it up.

The 415 mm x 415 mm cover (25344) can be fitted to the following main drains:

With stainless steel grille:	**With plastic grille:**
-20074	-22416
-20075	-22417
-20290	-22418
	-22419

The 570 mm x 570 mm cover (28556) can be fitted to the following main drains:

With stainless steel grille:	**With plastic grille:**
-20076	-28722
-20077	-28723
-20078	-28724
-20079	-28725

	Code	Standard Pack	Standard Weight in kg	Standard Volume in m^3
415 mm x 415 mm. Height: 70 mm	**25344**	1	2.25	0.012
570 mm x 570 mm. Height: 60 mm	**28556**	1	3.90	0.015

LINER AND PREFABRICATED POOL - LEVEL REGULATORS



Level regulator

Made of ABS. May be connected from the bottom or side, as required. Semi-die cut outlets to the pool so that the most suitable connection can be made. Adjustable lid height and level.
For all types of skimmers.

Code	Standard Pack	Standard Weight in kg	Standard Volume in m^3
15862	1	2.0	0.016



Level regulating valve

New

Level regulator valve compatible with the stainless steel skimmers of SLIM range. Compatible with items: 56313, 56316, 72743, 72744, 73501 73502. With 3/8" side connection and adjustable floater.

Code	Standard Pack	Standard Weight in kg	Standard Volume in m^3
73453	1	0.9	0.008

+ info
Further information on **PRODUCTS**
www.astralpool.com

LINER AND PREFABRICATED POOL - ABS INLETS

For all of the return inlets on this page

Complies with Standards
EN 16582-1
EN 16713-2

MULTIFLOW SYSTEM
The inlet's eyeball is supplied pre-marked with a number of diameters (14–20 and 25). With the help of a punch (also supplied with the inlet) one of the diameters can be cut out at the time of installation.
Max. recommended flow rate for a max. flow of 4 m/s:
Ø 14 mm = 2.2 m³/h. Ø 20 mm = 4.5 m³/h. Ø 25 mm = 7 m³/h







00330


00330CL090


00330CL129


00330CL144

Multiflow threaded return inlet for liner pools

Outer 2" thread, Ø 50mm inner. For liner pools. Comes in ABS, with gaskets and screws. Installation with bushing 15662 or 15663 is recommended (see page 129).

	Code	Standard Pack	Standard Weight in kg	Standard Volume in m³
Multiflow return inlet				
White	**00330**	12	4.5	0.020
Beige	**00330CL090**	12	4.5	0.020
Light Grey	**00330CL129**	12	4.5	0.020
Anthracite Grey	**00330CL144**	12	4.5	0.020


56499


56499CL090


56499CL129


56499CL144

NORM return inlets

Range of inlets suitable for installation in public and private pools. Manufactured in ABS with UV treatment.

	Code	Standard Pack	Standard Weight in kg	Standard Volume in m³
For prefabricated/liner pools - White	**56499**	12	4.5	0.020
For prefabricated/liner pools - Beige	**56499CL090**	12	4.5	0.020
For prefabricated/liner pools - Light Grey	**56499CL129**	12	4.5	0.020
For prefabricated/liner pools - Anthracite Grey	**56499CL144**	12	4.5	0.020
For prefabricated pools - White	**56500**	24	4.5	0.020
For prefabricated pools - Beige	**56500CL090**	24	4.5	0.020
For prefabricated pools - Light Grey	**56500CL129**	24	4.5	0.020
For prefabricated pools - Anthracite Grey	**56500CL144**	24	4.5	0.020


17383


17383CL090


17383CL129


17383CL144

Return inlets

Range of inlets suitable for installation in public and private pools. Manufactured in ABS with UV treatment.

	Code	Standard Pack	Standard Weight in kg	Standard Volume in m³
For prefabricated pools, Parker - White	**17383**	24	4.5	0.020
For prefabricated pools, Parker - Beige	**17383CL090**	24	4.5	0.020
For prefabricated pools, Parker - Light Grey	**17383CL129**	24	4.5	0.020
For prefabricated pools, Parker - Anthracite Grey	**17383CL144**	24	4.5	0.020

LINER AND PREFABRICATED POOL - ABS INLETS



Complies with Standards
EN 16582-1
EN 16713-2

Multiflow threaded return inlet for liner pools. Parker model

2" external thread, Ø 50 mm inner wall with Parker system. (Self-tapping screws). For installation with wall conduits code 15664 or 15665 (see page 129).

Code	Standard Pack	Standard Weight in kg	Standard Volume in m³
06498	20	4.72	0.021



Complies with Standards
EN 16582-1
EN 16713-2

Multiflow threaded return inlet for prefabricated pools

Outer 2" thread and Ø 50 mm inner wall to be glued. Made of ABS.

	Code	Standard Pack	Standard Weight in kg	Standard Volume in m³
White	**00334**	24	4.61	0.020
Beige	**00334CL090**	24	4.61	0.020
Light Grey	**00334CL129**	24	4.61	0.020
Anthracite Grey	**00334CL144**	24	4.61	0.020



Complies with Standards
EN 16582-1
EN 16713-2

Multiflow threaded return inlet for prefabricated pools

2" outer thread, 1½" inner thread. Made of white ABS. Comes with gaskets. The slots in the grille are no larger than 8 mm.

	Code	Standard Pack	Standard Weight in kg	Standard Volume in m³
Standard inlet	**06481**	30	5.1	0.021



Complies with Standards
EN 16582-1
EN 16713-2

Multiflow return inlet for panel pools

Inlets specially designed for installation in panel pools between 10 and 15 cm thick. To be glued to a Ø 50 mm pipe. Made of white ABS. Comes with gaskets.

Code	Standard Pack	Standard Weight in kg	Standard Volume in m³
33091	8	3.35	0.021



Complies with Standards
EN 16582-1
EN 16713-2

Return nozzle for prefabricated pools with liner

The diameter of the outer wall has a smaller diameter than other models so that it fits better in curved walls.

	Code	Standard Pack	Standard Weight in kg	Standard Volume in m³
Threaded 1½" BSP return nozzle	**32450**	24	7.1	0.021
Ø 50 mm return nozzle to be glued	**32451**	24	6.9	0.021

+ info PDB Product Database
Further information on **PRODUCTS**
www.astralpool.com

LINER AND PREFABRICATED POOL - ABS INLETS



Complies with Standards
EN 16582-1
EN 16713-2

Adjustable return inlet

Comes with gaskets, flange and screws. 3 adjustable positions: (100%, 65%, 35%). Flow rate: 13.5 m³/h. Outer Ø 63 mm connection.

Code	Standard Pack	Standard Weight in kg	Standard Volume in m³
15864	12	4.2	0.02



Complies with Standards
EN 16582-1
EN 16713-2

Pool floor return inlet for prefabricated pools

Return nozzle. Comes with gaskets, flanges and screws. Adjustable flow rate. Max. flow rate: 12 m³/h.

	Code	Standard Pack	Standard Weight in kg	Standard Volume in m³
2" outer thread and internal Ø 50 mm - White	**00340**	12	5.4	0.020
2" outer thread and internal Ø 50 mm - Beige	**00340CL090**	12	5.4	0.020
2" outer thread and internal Ø 50 mm - Light Grey	**00340CL129**	12	5.4	0.020
2" outer thread and internal Ø 50 mm - Anthracite Grey	**00340CL144**	12	5.4	0.020
To be glued Ø 63 mm PN 6 outer wall, Ø 50 mm inner	**20139**	12	5.4	0.021



Complies with Standards
EN 16582-1
EN 16713-2

BCN03 pool floor return inlet

Adjustable pool floor return inlet for liner pools. Designed to be glued to the inside of PN6 and PN10 piping. Made of white ABS, with self-tapping screws or with metal inserts. Plastic or stainless steel flange, depending on the model. Maximum flow rate: 9.5 m³/h.

	Code	Standard Pack	Standard Weight in kg	Standard Volume in m³
PN6 self-tapping plastic flange	**28230**	12	3.25	0.031
With PN6 plastic flange inserts	**28231**	12	3.55	0.031
PN10 self-tapping stainless steel flange	**28501**	12	4.24	0.031
With PN10 stainless steel inserts	**28502**	12	4.54	0.031



Complies with Standards
EN 16582-1
EN 16713-2

BCN03 adjustable pool floor return inlet

Pool floor return inlet for liner pools. Thanks to the adjustable feature, its installation in the pool floor is made extremely easy as it can be fitted after the concrete has been laid with wall conduit 43590.

	Code	Standard Pack	Standard Weight in kg	Standard Volume in m³
With plastic flange inserts	**43586**	12	2.04	0.033
Plastic self-tapping flange	**43587**	12	2.04	0.033
With stainless steel flange inserts	**43588**	12	2.04	0.033
Self-tapping stainless steel flange	**43589**	12	2.04	0.033

LINER AND PREFABRICATED POOL - ABS INLETS



Ø 90 mm wall conduit

PVC wall conduit. Cutting area of 120 mm for fitting it to the pool wall or floor. Ø 63 or Ø 75 connection, as required.

	Code	Standard Pack	Standard Weight in kg	Standard Volume in m³
Ø 90/Ø 63–Ø 75 mm wall conduit	**43590**	9	7.3	0.033

For inlets:
Net'N'Clean: 43584 - 43585
BCN 03: 43586 - 43587 - 43588 - 43589
Return inlet/suction nozzle for high flow rates: 41518 - 41519 - 41520 - 41521



3" adjustable pool floor return inlet

Made of white ABS. Suction. Comes with gaskets, flanges and screws. Flow rate adjusted by turning the grille. Suction surface area: 0.015 m². Flow rate at 0.4 m/s: 20 m³/h. Max. recommended flow rate: 26 m³/h. (0.5 m/s.).

	Code	Standard Pack	Standard Weight in kg	Standard Volume in m³
Grille in AISI-304 stainless steel	**08316**	2	2.65	0.047
Grille in white ABS	**11795**	2	2.65	0.047



Complies with Standards
EN 16582-1
EN 16713-2

Suction nozzle for liner pools

Outer 2" thread, internal Ø 50 mm. Made of white ABS. Comes with plug, gaskets and screws. Recommended for installation with wall conduit 15663.

	Code	Standard Pack	Standard Weight in kg	Standard Volume in m³
Standard return inlet - White	**00332**	12	4.22	0.020



Complies with Standards
EN 16582-1
EN 16713-2

Suction nozzle for panel pools

For installation in panel pools between 10 and 15 cm thick. Comes with gaskets. Connections: To be glued to Ø 50 mm piping and 1½" BSP thread.

	Code	Standard Pack	Standard Weight in kg	Standard Volume in m³
	33092	8	3.35	0.021



Complies with Standards
EN 16582-1
EN 16713-2

Return nozzle for liner pools

Made of ABS. Comes with gaskets, flanges and screws. Connections: outer 2" thread and Ø 50 mm inner.

	Code	Standard Pack	Standard Weight in kg	Standard Volume in m³
White	**17382**	20	6.0	0.020
Beige	**17382CL090**	20	6.0	0.020
Light Grey	**17382CL129**	20	6.0	0.020
Anthracite Grey	**17382CL144**	20	6.0	0.020

+ info PDB Product Database
Further information on **PRODUCTS**
www.astralpool.com

LINER AND PREFABRICATED POOL - ABS INLETS


00336


00336CL090


00336CL129


00336CL144

Complies with Standards
EN 16582-1
EN 16713-2

Suction nozzle for prefabricated pools

Outer 2" thread, Ø 50 mm inner wall. For prefabricated pools. Made of ABS. Comes with 1½" threaded plug.

	Code	Standard Pack	Standard Weight in kg	Standard Volume in m³
White	**00336**	24	4.13	0.020
Beige	**00336CL090**	24	4.13	0.020
Light Grey	**00336CL129**	24	4.13	0.020
Anthracite Grey	**00336CL144**	24	4.13	0.020



Double gasket kit

Kit made up of a double gasket and the screws necessary for the installation of nozzles in panel pools. Made of TPE, the kit enables the installation of various accessories in pool shells and protects the panelling from coming into contact with water. Easy to install. Prevents corrosion of the panelling in the area that has been die cut. We recommend to place this Kit on panel pools of metal sheet in nozzles 00330; 00332; 17382; 17383 and 56499

	Code	Standard Pack	Standard Weight in kg	Standard Volume in m³
Inserts for nozzles	**43455-0500**	80	-	0.035



Return inlet/suction nozzle for high flow rates

Return inlet for large flow rates that can also be used as a suction nozzle. Maximum suction flow rate of 30m³/h for a maximum flow rate speed of 4 m/s. Maximum suction flow rate of 5 m³/h for a maximum flow rate speed of 0.5 m/s. PVC body. Connection for Ø 75 or Ø 90 mm pipe. Inlets can be installed into bushing 43590 (see page 123). Grille can be adjusted in any direction.

	Code	Standard Pack	Standard Weight in kg	Standard Volume in m³
Panel pools	**41518**	10	5.50	0.021
Prefabricated pools	**41521**	12	4.20	0.021

Complies with Standards
EN 16582-1
EN 16713-2



Suction nozzle for overflow pools with liner

PVC body. Maximum flow rate of 7 m³/h for a maximum flow rate velocity of 0.5 m/s. Connection for Ø 75 or Ø 90 piping. Nozzle with double gasket. Thanks to the design of the flange, the nozzle is able to take in all of the water in the overflow channel.

Code	Standard Pack	Standard Weight in kg	Standard Volume in m³
41519	12	4.83	0.021

LINER AND PREFABRICATED POOL - ABS INLETS



Return nozzle for prefabricated pools

2" outer thread, 1½" inner thread. Made of white ABS.

	Code	Standard Pack	Standard Weight in kg	Standard Volume in m³
Standard inlet	**06484**	30	4.3	0.021

Complies with Standards
EN 16582-1
EN 16713-2



74121



74121CL090



74121CL129



74121CL144

Main drain polyester pool

New

Specially designed for polyester pools. Main-drain/ nozzle that should be installed in the wall of the pool in the deepest area of the pool. Installation with 2" thread, gasket and nut. Made of ABS.

	Code	Standard Pack	Standard Weight in kg	Standard Volume in m³
White	**74121**	24	4.5	0.021
Beige	**74121CL090**	24	4.5	0.021
Light Grey	**74121CL129**	24	4.5	0.021
Anthracite grey	**74121CL144**	24	4.5	0.021

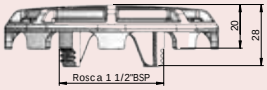

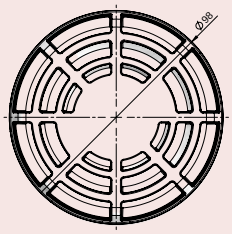



Hydromassage kit

Made up of a return inlet and wall conduit fitted with an air inlet and a venturi. Two wall conduit lengths available. Ø 50 mm water connection pipe and Ø 20 mm air suction pipe.

		Code	Standard Pack	Standard Weight in kg	Standard Volume in m³
Hydromassage kit for prefabricated polyester pools:					
Length of wall conduit 190 mm					
White		**32114**	12	3.5	0.021
Beige	New	**32114CL090**	12	3.5	0.021
Light grey	New	**32114CL129**	12	3.5	0.021
Anthrachite Grey	New	**32114CL144**	12	3.5	0.021
Length of wall conduit 275 mm					
White		**32384**	10	3.4	0.021
Beige	New	**32384CL090**	10	3.4	0.021
Light grey	New	**32384CL129**	10	3.4	0.021
Anthrachite Grey	New	**32384CL144**	10	3.4	0.021
Hydromassage kit for prefabricated pools with liner:					
Length of wall conduit 190 mm					
White		**32115**	12	3.5	0.021
Beige	New	**32115CL090**	12	3.5	0.021
Light grey	New	**32115CL129**	12	3.5	0.021
Anthrachite Grey	New	**32115CL144**	12	3.5	0.021
Length of wall conduit 275 mm					
White		**32385**	8	3.5	0.021
Beige	New	**32385CL090**	8	3.5	0.021
Light grey	New	**32385CL129**	8	3.5	0.021
Anthrachite Grey	New	**32385CL144**	8	3.5	0.021

+ info PDB Product Database
Further information on **PRODUCTS**
www.astralpool.com

LINER AND PREFABRICATED POOL - STAINLESS STEEL INLETS



Complies with Standards
EN 16582-1
EN 16713-2

Return inlet for liner pool with Ø 20mm ball

1½" external thread. Manufactured in AISI-316L stainless steel. Ø 20 mm ball. Comes with gaskets and screws. Maximum recommended flow of 4.5 m³/hour according to EN 16582-1 and EN16713-2 standards if installed at a maximum of 500 mm below pool water level.

Code	Standard Pack	Standard Weight in kg	Standard Volume in m³
16327	1	0.5	0.001



Complies with Standard
EN 13451-1-3

Complies with Standards
EN 16582-1
EN 16713-2

Return inlet for liner pool with Ø 25 mm ball

1½" external thread. Manufactured in AISI-316L stainless steel. Ø 25 mm ball. Comes with gaskets and screws. Recommended flow rate: 7 m³/h.

Code	Standard Pack	Standard Weight in kg	Standard Volume in m³
69877	1	0.5	0.001



Complies with Standard
EN 13451-1-3

Complies with Standards
EN 16582-1
EN 16713-2

Adapter for pool wall conduits

1½" external thread. Manufactured in AISI-316L stainless steel. For adapting concrete pool bushings to pre-fabricated pool ones. Must be used with stainless steel inlet 16331, 69878.

Code	Standard Pack	Standard Weight in kg	Standard Volume in m³
26171	1	0.2	0.001



Complies with Standards
EN 16582-1
EN 16713-2

Bushing return inlet for liner pool with Ø20 ball

Manufactured in AISI-316L stainless steel. Fits to 00344 and 00345 bushings and adapts to converter 26171. Comes with gaskets and screws. Install at a maximum of 500 mm below water level. Ball fitted using screws. Recommended flow rate: 4.5 m³/h.

Code	Standard Pack	Standard Weight in kg	Standard Volume in m³
16331	1	0.3	0.001



Complies with Standard
EN 13451-1-3

Complies with Standards
EN 16582-1
EN 16713-2

Bushing return inlet for liner pool with Ø25 ball

Manufactured in AISI-316L stainless steel. Fits to 00344 and 00345 bushings and adapts to converter 26171. Comes with gaskets and screws. Ball fitted using screws. Recommended flow rate: 7 m³/h.

Code	Standard Pack	Standard Weight in kg	Standard Volume in m³
69878	1	0.3	0.001

LINER AND PREFABRICATED POOL - STAINLESS STEEL INLETS



Complies with Standard **EN 13451-1-3**

Complies with Standards **EN 16582-1** **EN 16713-2**

Adjustable pool floor return inlet

2" external thread. Made of AISI-316L stainless steel. Can be fitted in concrete and prefabricated pools. The water flow can be adjusted by loosening or tightening the central screw. Max. recommended flow rate complaint with standard EN 13451-3: 14 m³/h.

Code	Standard Pack	Standard Weight in kg	Standard Volume in m³
15839	1	0.9	0.002



Complies with Standard **EN 13451-1-3**

Complies with Standards **EN 16582-1** **EN 16713-2**

Suction nozzle for liner pools

In AISI-316L stainless steel. Comes with sealing gaskets, flange and screws. With 1½" outer thread. Push-fit connection 06584 is needed.

Code	Standard Pack	Standard Weight in kg	Standard Volume in m³
16330	1	0.5	0.001

LINER AND PREFABRICATED POOL - STAINLESS STEEL EMBELLISHERS FOR ABS



56344



56340

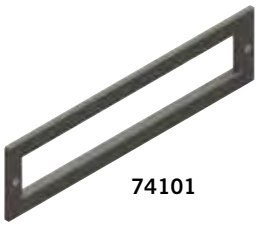

74101

Stainless Steel embellisher for Skimmers

New

AISI-316L embellishers for ABS skimmers. Includes flange, screws and gaskets.

	Code	Standard Pack	Standard Weight in kg	Standard Volume in m³
ABS standard mouth skimmers items 01461 (15L), 01462 (15L), 11309 (17.5L), 11310 (17.5L)	**56344**	1	1.5	0.004
ABS wide mouth skimmers items 01463 (15L), 01464 (15L), 11311 (17.5L), 11313 (17.5L)	**56340**	1	1.87	0.005
ABS skimmer NORM item 56176.	**74101**	1	1.76	0.001

+ info PDB Product Database
Further information on **PRODUCTS**
www.astralpool.com

LINER AND PREFABRICATED POOL - STAINLESS STEEL EMBELLISHERS FOR ABS



69173

Stainless Steel embellisher for main drain

New

AISI-316L embellishers for ABS main drains. It includes screws.

	Code	Standard Pack	Standard Weight in kg	Standard Volume in m^3
ABS main drain 00270	**69173**	1	1.44	0.001
ABS main drain 00271	**69174**	1	1.21	0.003



69174



Stainless Steel embellisher for return inlet

New

Embellisher and stainless steel ball for ABS inlets. Includes flange, screws and gaskets.

	Code	Standard Pack	Standard Weight in kg	Standard Volume in m^3
ABS return inlet items 00330 and 56499	**69171**	1	0.31	0.001
ABS suction inlet item 00332	**69172**	1	0.41	0.001

LINER AND PREFABRICATED POOL - WALL BUSHINGS

Range of 300 mm long conduits for Ø 2" inlets and Multiflow that can be cut to different lengths, depending on the thickness of the pool wall. Made of ABS. The ribs of the end plates have holes for fitting the wall conduit to the pool structure, which makes assembly straightforward. The inlet's end plate ensures that it fits flush to the pool wall so that the liner remains flat against the wall and does not swell. This system is aesthetically pleasing as only the face plate can be seen.



Wall conduit with 2" rear male thread and Ø 50 mm smooth inner wall

	Code	Standard Pack	Standard Weight in kg	Standard Volume in m³
2" front female thread for nozzles with 2" male thread	**15663**	12	4.0	0.040
2" front female thread for nozzle with code number 06498 only	**15664**	14	4.2	0.040

Wall conduit with smooth Ø 63 mm rear connection and smooth Ø 50 mm inner wall

	Code	Standard Pack	Standard Weight in kg	Standard Volume in m³
2" front female thread for for nozzles with 2" male thread	**15662**	12	5.0	0.040
2" front female thread for for nozzle 06498 only	**15665**	14	5.4	0.040



Wall conduits in PVC

Grey PVC.

	Code	Standard Pack	Standard Weight in kg	Standard Volume in m³
150 mm long 2" outer thread + Ø 50 mm inner, 2" inner thread	**00322**	40	8.2	0.040
300 mm long 2" female and male thread connection	**00323**	20	8.9	0.040
2" rear male thread pipe connection or smooth inner wall for MINI projector (33684)	**00324**	20	8.5	0.040
2" outer thread + Ø 50 mm inner, 1½" inner thread	**00325**	20	8.4	0.040
2" outer thread + Ø 50 mm inner wall. Ø 50 mm inner wall specially for nozzles with code numbers 00289, 07957, 00304, 00305 and 00306..	**00326**	20	8.4	0.040



Stainless steel wall conduit

Made in stainless steel. AISI-304L. Both ends have a 1 ½" female thread. With an equipotential outlet. For inlet 16331 (see page 126).

	Code	Standard Pack	Standard Weight in kg	Standard Volume in m³
Length 240 mm	**00344**	1	0.7	0.003
Length 340 mm	**00345**	1	0.9	0.005

+ info PDB Product Database
Further information on **PRODUCTS**
www.astralpool.com

SKIMFILTERS



Skimfilter pack

Flow rate: 3.8 m³/h. Mini-skimmer opening. 2" inlet connection. 12 V (50 Hz) motor. 230-12V 50 Hz transformer. EC- and GS-certified. Cartridge included. For fixing to outer pool wall. Replacement cartridge: 09037R0200/1.

Code	Standard Pack	Standard Weight in kg	Standard Volume in m³
30889	1	6.45	0.038



Floating skimmer

Diameter 160 mm. Maximum flow rate: 5 m³/h. Ø 32 mm and Ø 38 mm outer connections. With plastic support clamp designed for panel pools.

Code	Standard Pack	Standard Weight in kg	Standard Volume in m³
16573	1	1.3	0.024

SWIMMING POOL SHELL MATERIAL PACKS

Pool shell equipment packs

Pack made up of: 2 skimmers/3 multiflow return inlets/1 suction nozzle/1 round main drain.

	Code	Standard Pack	Standard Weight in kg	Standard Volume in m³
Pack for concrete pools	**56301**	1	-	-
Pack for liner pools	**58930**	1	-	-

Pack for concrete pools

Contains the following products:



00249
2x



56379
1x



24413
3x



24415
1x

Pack for liner pools

Contains the following products:



01464
2x



56382
1x



56381
3x



00332
1x

SWIMMING POOL SHELL MATERIAL PACKS

Interchangeable basin equipment

Bushing, return inlet, suction nozzle, flange assembly to be installed in concrete, prefabricated and liner pools
The measurements of each item make it possible to interchange them with the stainless steel sets.
The inlets can be installed in any bushing with a 1½" BSP thread. There is a flange set to install the inlets in pools with a liner.

All items mainly made in plastic (ABS), except screws and gaskets.

Each item can be assembled with the stainless steel sets. Interchangeable stainless steel/plastic codes.

	Code	Standard Pack	Standard Weight in kg	Standard Volume in m^3
Stainless steel interchangeable return inlet	**49758**	1	-	0.021
ABS interchangeable return inlet	**49754**	1	-	0.021
ABS interchangeable return inlet circular vent	**52681**	1	-	0.021
Stainless steel interchangeable suction nozzle	**49759**	1	-	0.021
ABS interchangeable suction nozzle	**72672**	1	-	0.021
Stainless steel interchangeable flange inlet set	**49760**	1	-	0.021
ABS interchangeable flange inlet set	**49756**	1	-	0.021
Interchangeable bushing inlet set stainless steel for threading	**49761**	1	-	0.021
Interchangeable bushing inlet set ABS for threading	**49757**	1	-	0.021
Interchangeable bushing inlet set ABS for gluing	**49832**	1	-	0.021

	 Return nozzle	 Suction nozzle	 Flange	 Wall conduits
STAINLESS STEEL	**49758**	**49759**	**49760**	**49761**
ABS	**49754** **52681***	**72672**	**49756**	**49757** **49832****

* Circular vent
** To glue

INSTALLATION DIAGRAMS

Skimmer installation

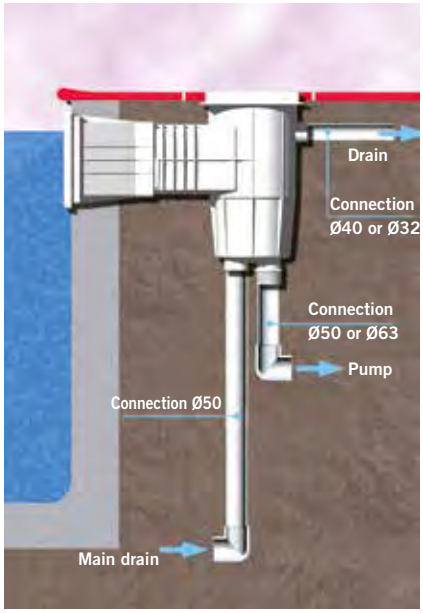

Water level regulator installation

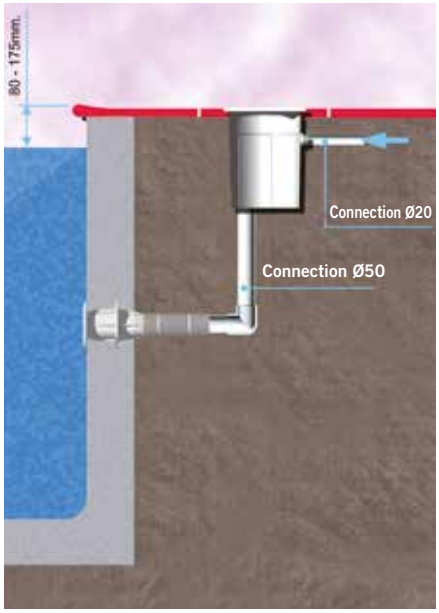

Main drain installation

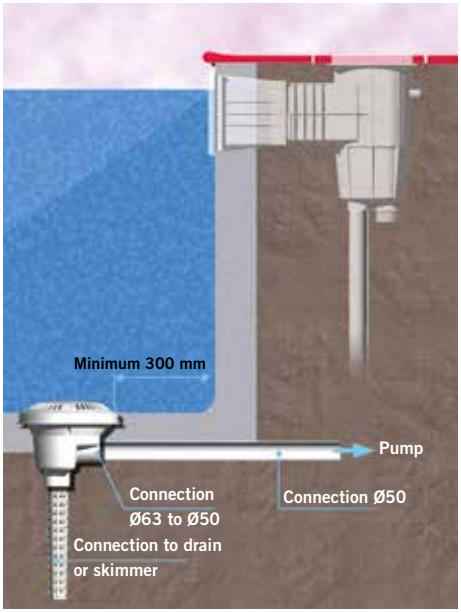

Nozzle installation

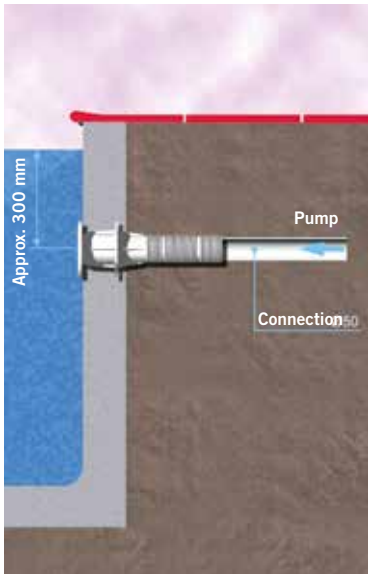

Underwater installation

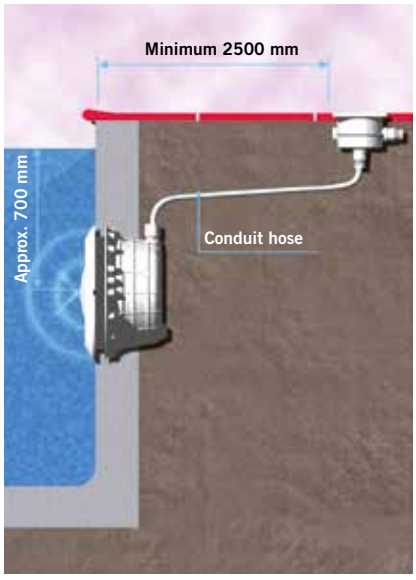

Net'n'Clean valve installation

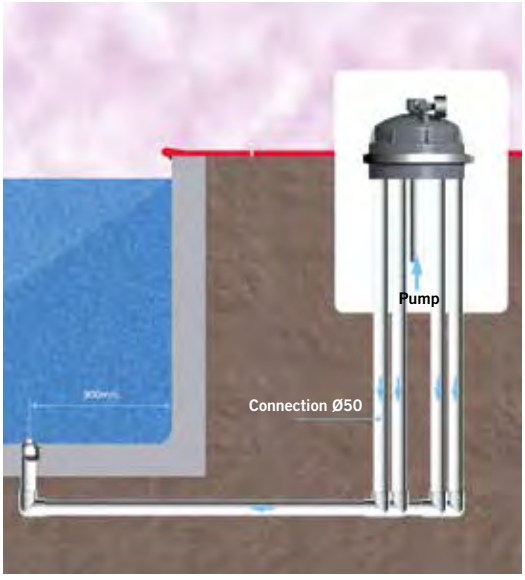

INSTALLATION DIAGRAMS

CONCRETE POOLS:

Concrete / liner

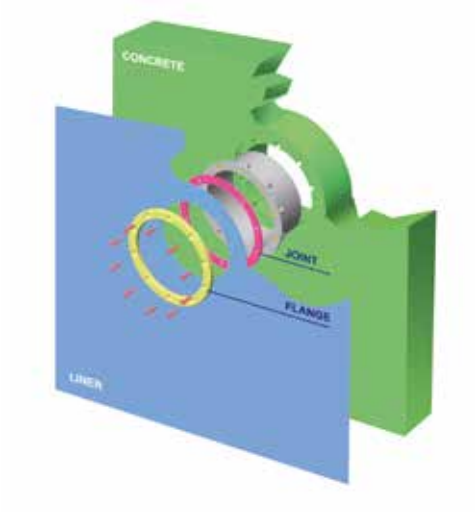

Concrete

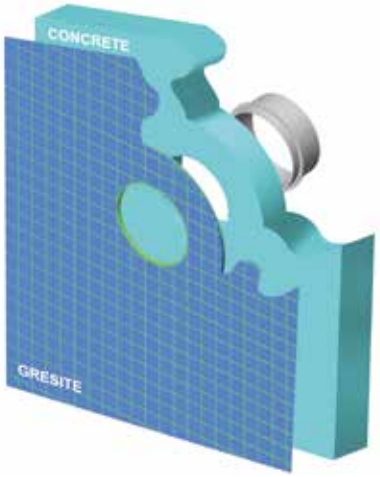

FIBREGLASS POOLS:

Fibreglass



Threaded fibreglass



PANEL POOLS:

1 gasket

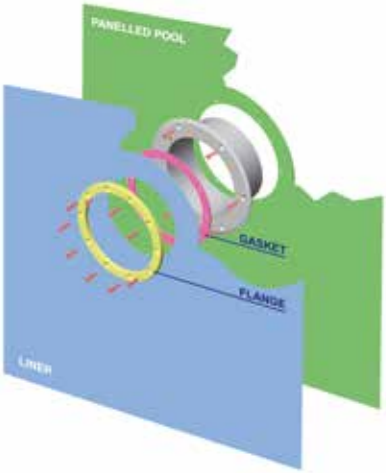

2 gaskets

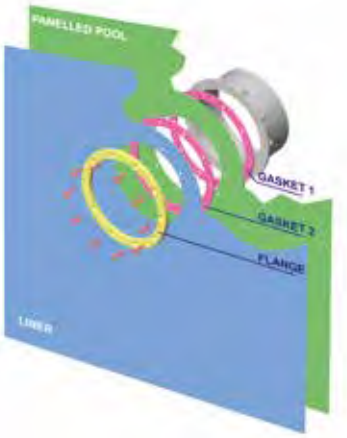

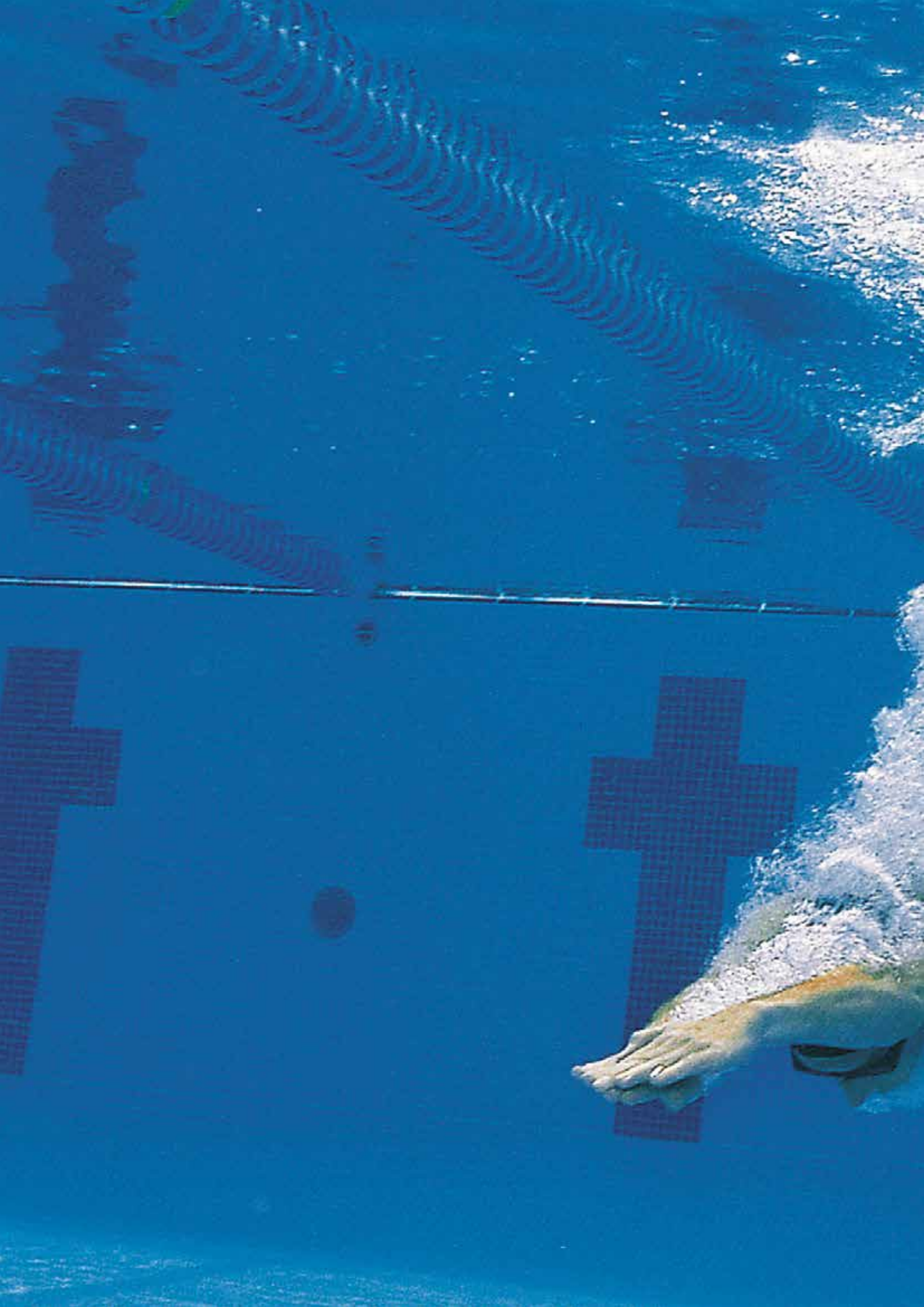



FILTRATION

136 • Filter features and selection
138 • Nanofiber filter
139 • Diatomaceous filters
140 • Cartridge filters
140 • Hydrospin pre-filter
141 • OC-1 Filters
142 • Injection moulded sand filters
143 • Blow-moulded sand filters
146 • Laminated sand filters
151 • High-performance laminated sand filters
158 • Bobbin-wound sand filters
159 • Compacts without interior installation
159 • Compacts with interior installation
161 • Multiport valves
166 • Gauge panel unit
166 • Filtration media and accessories

FILTER SELECTION GUIDE

HOW DO YOU SELECT THE FILTER THAT YOU NEED?

A key factor in cleaning pool water is its passage through the filter. This process works in a fully closed circuit. The quality and type of filter are therefore two decisive aspects so that when the water circulates through the system it comes out completely clear.

A filter should be selected based on the following criteria:

1. **Type of filter medium.** This is a basic decision for setting the level of water clarity, characteristics of use and maintenance.
2. **Tank manufacture technology.** This directly affects its resistance, durability and quality of finish.
3. **Flow rate** (m^3/h). Set according to the volume and recirculation time of each pool. Ensure that this matches the recommended flow rate when selecting the pump.
4. **Features and added extras.**

Remember to always check the space available in your facility to both access and run the filter once selected.



Cantabric Filter

THERE ARE 3 MAIN TYPES OF FILTER

DIATOMACEOUS EARTH FILTERS

Filtration method that delivers maximum filtration fineness. However, this system requires more time for maintenance.

- Excellent filtration quality
- Compact solution
- Expert installation and maintenance

CARTRIDGE FILTERS

One or more cartridges are used to deliver a high level of filtration fineness. This is also the ideal solution when there are restrictions on space, water consumption and water for filter backwashing.

- Very good filtration quality
- Low water consumption
- Compact solution

MEDIA FILTERS

Commonly called **sand filters**, as this is the most widely used filter medium in this type of filter. Other media can be used, such as glass and anthracite, which optimize their performance.

To obtain maximum filtration quality and performance, use filters with the highest filter bed, several layers of filter media and a low filtration speed.

- Robust technology with a great capacity for recovering unkempt water
- Easy to use and maintain
- Value for money

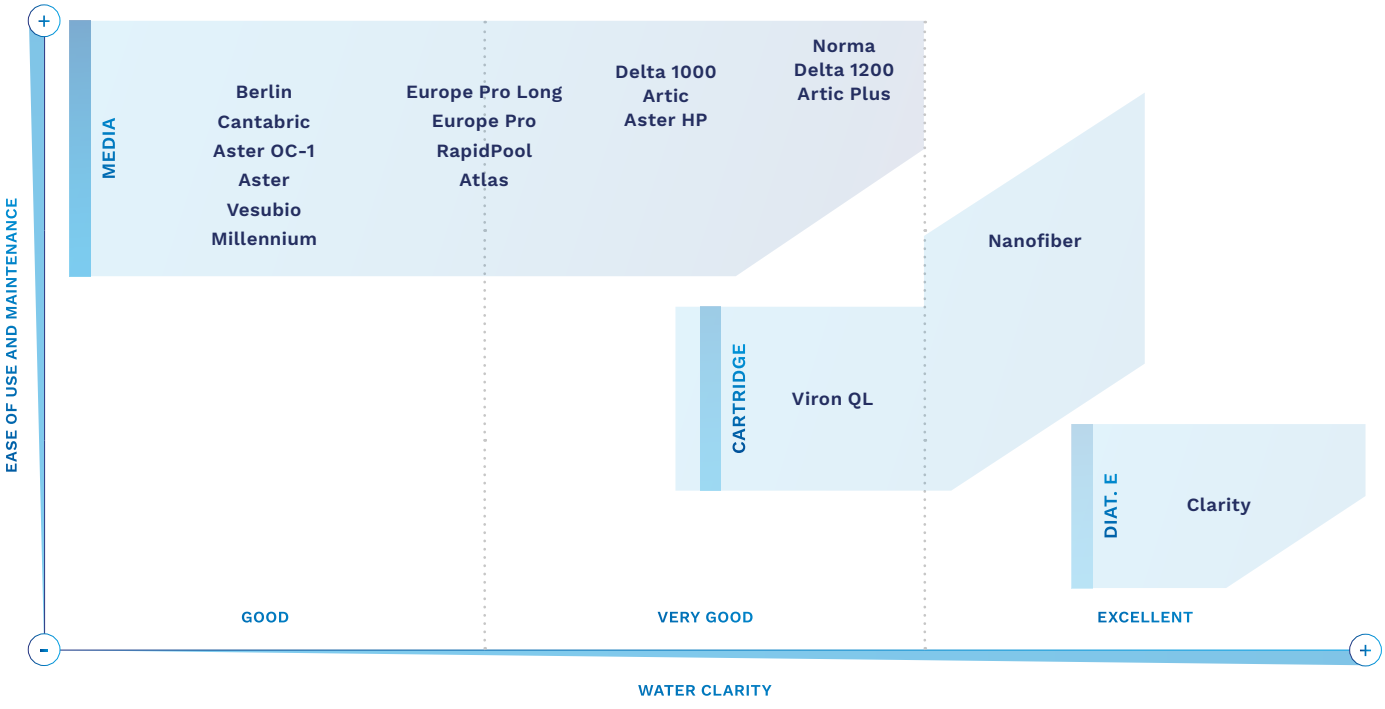

FILTER FEATURES AND SELECTION

FILTER		TANK	PRODUCT FEATURES						
			Material and technology	Rob. & durab.*	Flow m³/h	Diameter	Filtration quality	Connections	Warranty (t/c)**	Other
DIAT. E		Clarity	Polyester + FG Laminated	5	11-27	610	5	1"1/2-2" Lateral	2/2	Excellent filtration quality. Durability and reliability of body and components.
CARTRIDGE		Nanofiber	Injection-molded thermoplastic	3	10-18	402	5	2" Lateral	5/2	Single nanofiber cartridge filter and excellent filtration quality. Manual and automatic backwash using the multiport valve.
		Viron QL	Injection-molded thermoplastic	3	< 30	690	4	D50	5/2	Multi-cartridge filter. Long period between each cleaning of cartridges.
BED OF MEDIA		Cantabric	Injection-molded thermoplastic	4	6-30	400-900	2	1"1/2-2"1/2 Lateral/ Top	10/2	A flagship in filtration for residential pools. High quality and design for good performance over time.
		Berlin	Polyester + FG Bobbin-wound	5	9-56	500-1,200	2	1"1/2-D90 Lateral	2/2	Extraordinary reliability and durability due to its dual-layer body. Large cover in diameter to facilitate access.
		Norma	Polyester + FG Laminated	4	10-34	650-1,200	4	D75-D140 Lateral	2/2	High performance in residential pools. Filter bed height of 1.2 m. Wide range of added extras and accessories.
		Delta 1200	Polyester + FG Laminated	4	13-45	650-1,200	4	1"1/2-D90 Lateral	2/2	High performance in residential pools. Filter bed height of 1.2 m. Wide range of added extras and accessories.
		Artic Plus	Polyester + FG Laminated	4	16-56	650-1,200	4	1"1/2-4" Lateral	2/2	High performance in residential pools. Filter bed height of 1.2 m. Wide range of added extras and accessories.
		Delta 1000	Polyester + FG Laminated	4	8-45	500-1,200	4	1"1/2-D90 Lateral	2/2	High performance in residential pools. Filter bed height of 1.0m. Wide range of added extras and accessories.
		Artic	Polyester + FG Laminated	4	9-56	500-1,200	4	1"1/2-4" Lateral	2/2	High performance in residential pools. Filter bed height of 1.0m. Wide range of added extras and accessories.
		Aster HP	Polyester + FG Laminated	4	9-31	500-900	4	1"1/2-2"1/2 Lateral	2/2	Filter bed height of 0.8 m in all models with collector arms. Filter bed height of 0.6m in all models with nozzle plates.
		Atlas	Polyester + FG Laminated	4	9-30	500-900	3	1"1/2-2"1/2 Lateral	10/2	Top quality and features in its category. Filter designed for the most exacting professionals.
		Europe Pro Long	Polyester + FG Laminated	4	9-30	500-900	3	1"1/2-2"1/2 Lateral	2/2	Easy to access thanks to its large cover in diameter. Transparent or polyester cover as options.
		Europe Pro	Polyester + FG Laminated	4	9-30	500-900	3	1"1/2-2"1/2 Lateral	2/2	Easy to access thanks to its large cover in diameter. Transparent or polyester cover as options.
		RapidPool	Polyester + FG Laminated	3	6-24	400-800	3	1"1/2-2" Lateral	2/2	Rapid access cover. No need for tools to access inside.
		Aster	Polyester + FG Laminated	3	5-31	350-900	2	1"1/2-2"1/2 Lateral/ Top	2/2	A classic in AstralPool's filtration with the widest range of choices. Robustness, user friendliness and reliability all in one.
		Aster OC-1	Polyester + FG Laminated	3	8-32	450-900	2	1"1/2-2"1/2 Lateral	2/2	Filter specially designed for the cutting-edge medium, OC-1. Saves energy, water and time spent on maintenance.
		Vesubio	Polyester + FG Laminated	3	8-32	450-900	2	1"1/2-2"1/2 Lateral/ Top	2/2	Excellent value for money in its category. A laminated filter suitable for any size of pool.
		Millennium	**Blow-molded thermoplastic**	2	6-17	380-660	2	1"1/2 Lateral/ Top	2/2	Magnificent finish and resistance in the category of blow-molded filters. Cover all your filtration requirements with the Millennium monobloc.

· All media filters in this table can work equally with sand or glass, except for the Aster OC-1 range.

· Performance based on internal tests and comparisons.

* Robustness and durability

** Warranty for tank / components

+ info
PDB Product Database
Further information on **PRODUCTS**
www.astralpool.com

NANOFIBER FILTER



Nanofiber filter

Filter for residential pools up to 90m³ characterised by its high-quality filtration: 5-8 microns, self-cleaning function, small size. The NanoFiber filter uses an innovative material that delivers better quality filtration due to its network of nanofibers.

- Easy to use
- Reliable
- Lower water consumption
- Higher water filtration quality
- Compact
- Easy to clean
- Dirt slow to build up without limescale
- Compatible with current filter systems on the market
- Replacement filtration media



	Code	Standard Pack	Standard Weight in kg	Standard Volume in m³
NanoFiber Auto 150 filter (10 m³/h)	**67355-0100**	1	10.68	0.116
NanoFiber Auto 180 filter (14 m³/h)	**67356-0100**	1	10.68	0.116
NanoFiber Auto 200 filter (18 m³/h)	**67357-0100**	1	10.68	0.116
Auto adaptor kit	**67509**	1	3.68	0.027
NanoFiber 150 filter (10 m³/h)	**64837**	1	9.68	0.093
NanoFiber 180 filter (14 m³/h)	**64838**	1	9.68	0.093
NanoFiber 200 filter (18 m³/h)	**64839**	1	9.68	0.093
Replacement filtration media				
For Nanofiber 150	**65383**	1	1.58	0.022
For Nanofiber 180	**65384**	1	1.58	0.022
For Nanofiber 200	**65385**	1	1.58	0.022

Auto versions can be connected to a 07444 manual valve, a 70769 automatic valve or an AstralPool MAC

Model	Filtration surface area (m²)	Flow rate (m³/h)	Max. pool volume (m³)
NanoFiber 150	4,5	10	70
NanoFiber 180	5,2	14	80
NanoFiber 200	6,0	18	90



Complies with Standard
EN 16713-01



DIATOMACEOUS FILTERS



Complies with Standard
EN 16713-01

Clarity diatomaceous earth filters

Made in polyester and fibreglass. Supplied with pressure gauge, air vent and side mounted multiport valve. Filtration velocity 4.9 $m^3/h/m^2$.

	Code	Standard Packaging	Standard Weight kg	Standard Volume m^3
11000 l/h Ø 600 mm Outlet 1½" Model DE-24	**11619**	1	34.0	0.410
16400 l/h Ø 600 mm Outlet 1½" Model DE-36	**11620**	1	39.0	0.460
21800 l/h Ø 600 mm Outlet 2" Model DE-48	**11621**	1	44.0	0.550
27300 l/h Ø 600 mm Outlet 2" Model DE-60	**11622**	1	48.0	0.610



Multiport valve for Clarity filter

This valve is valid only for the diatomaceous earth filter "Clarity".

	Code	Standard Packaging	Standard Weight kg	Standard Volume m^3
For D.E. filter 1½" with filter connections (config. 2)	**15385**	6	15.5	0.079
For D.E. filter 2" with filter connections (config. 2)	**15389**	6	22.7	0.158



Diatomaceous earth

	Code	Standard Packaging	Standard Weight kg	Standard Volume m^3
Celatom FW-60. 20 Kgs bag	**03247**	1	20	0.60
Celite 545. 23 Kgs bag	**03246**	1	23	0.60

+ info
Further information on **PRODUCTS**
www.astralpool.com
PDB Product Database

CARTRIDGE FILTERS



Viron cartridge filter

Manufactured in injection-moulded plastic and suitable for high-pressure applications. Easy-access closing system, filtration surfaces of 39m² or 50m² enabling prolonged intervals between each cleaning operation or cartridge replacement Includes water purge, oil pressure gauge and connection accessories. 5-year guarantee on the tank.Complies with filtration requirements as per standard EN 16713-1.

	Code	Standard Pack	Standard Weight in kg	Standard Volume in m³
Viron QL 420 cartridge filter	**76340**	1	48	0.252
Viron QL 540 cartridge filter	**76341**	1	50	0.355

Model	Filtration area	Maximum flow rate	Weight	Height
Viron QL 420	39 m²	500 lpm	35 kg	943 mm
Viron QL 540	50 m²	500 lpm	40 kg	943 mm

Complies with Standard
EN 16713-01

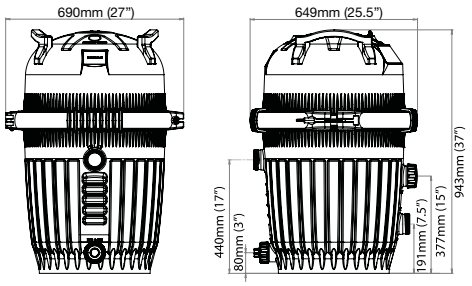

HYDROSPIN PRE-FILTER





Hydrospin & Hydrospin Compact

Hydrocyclone pre-filters can be fitted to filtration systems in both new and old installations. Hydrospin is able to treat flows up to 30 m²/h with a maximum working pressure of 2.5 bars. It is fitted between the pump and the filter and separates out solids of up to 40 micra, thus reducing by half the amount of water consumed for cleaning the filtration system. HydroSpin has a device for collecting solids with three separate areas (settling, clarifying and clouding). It can be cleaned using just five litres of water without having to stop the pump.

	Code	Standard Pack	Standard Weight in kg	Standard Volume in m³
Hydrospin	**45289**	1	7.8	0.088
Hydrospin Compact	**53743**	1	4.0	0.033
Kit for wall installation, for 45289	**47158**	4	4.2	0.117

	45289	53743
Working pressure (bar)	2,5	2,5
Connections	Ø 63	Ø 50 thread 2¼"
Purge connection	1"	¾
Min. flow rate (m³/h)	5	3
Max. flow rate (m³/h)	30	16.5
Water for cleaning (l)	5	15
Separate solids (micron)	40	60
Floor support	Included	
Wall support	Accessory 47158	Included

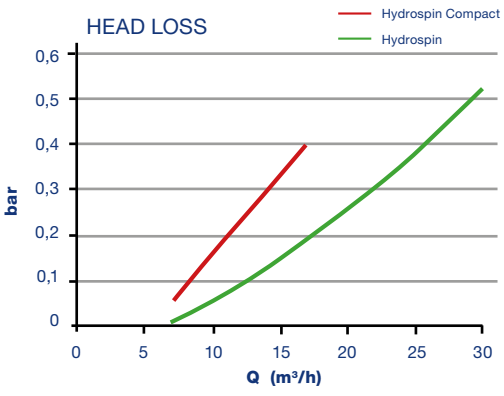

OC-1 FILTERS



Complies with Standard
EN 16713-01

Aster OC-1 filters

White laminated polyester and fibreglass filter. Internal parts with special sides for OC-1 media. Filter for side selector valve. ¼" air and water purge. Transparent lid with screws. Maximum temperature: 50 ºC Maximum pressure 2.5 bar. Maximum filtration speed 50m³/h/m². Filter for OC-1 filtration media. Not compatible with sand, glass or other filter loads.

	Code	Standard Pack	Standard Weight in kg	Standard Volume in m³
With multiport side valve				
OC-1 Aster filter 450	**68642**	1	21	0.23
OC-1 Aster filter 500	**68643**	1	23	0.28
OC-1 Aster filter 600	**68644**	1	28	0.39
OC-1 Aster filter 650	**68645**	1	29	0.45
OC-1 Aster filter 750	**68646**	1	37	0.62
OC-1 Aster filter 900-2"	**68647**	1	55	1.27
Without multiport valve				
OC-1 Aster filter 900-2½"	**68648**	1	55	1.27

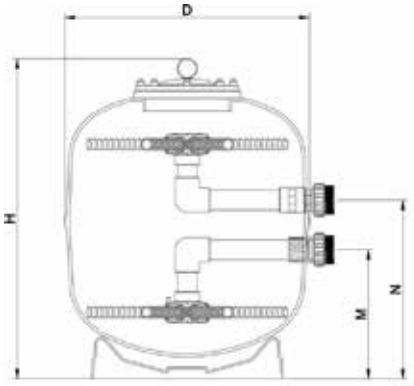

	68642	68643	68644	68645	68646	68647	68648
Ø D (mm)	450	500	600	650	750	900	900
H (mm)	845	855	900	955	1035	1100	1100
M (mm)	305	290	330	370	325	365	390
N (mm)	430	415	455	495	555	635	660
Connections	1½"	1½"	1½"	1½"	2"	2"	2½"
Flow (m³/h) at 50 m³/h/m²	8	10	14	17	22	32	32
Maximum pressure (kg/cm²)	2.5	2.5	2.5	2.5	2.5	2.5	2.5
Pool volume (m³)	64	72	112	120	168	240	240
Filtration surface (m²)	0.159	0.196	0.283	0.332	0.442	0.636	0.636
OC-1 volume (L)	44	59	78	125	181	313	313
OC-1 (kg)	9	12	16	25	36	63	63
Net weight (kg)	18	20	25	26	33	50	50



+ info
PDB Product Database
Further information on **PRODUCTS**
www.astralpool.com

INJECTION MOULDED SAND FILTERS

Optional:
Standard American sizes

Injection-moulded filter in technical plastics. Ivory. Thermal-welded joining of top and bottom filter parts. Fitted with a pressure gauge and manual water and air purge valves. Selector valve included. Maximum filtration speed ($m^3/h/m^2$) Maximum working pressure: 2.5 kg/cm^2. Sand and glass compatible (see page 166). Complies with filtration requirements as per standard EN 16713-1.



Cantabric top filters

Top mounted multiport valve. Threaded filter locking ring in ABS.

	Code	Standard Pack	Standard Weight in kg	Standard Volume in m^3
6000 l/h Ø 400 mm outlet 1½"	**22399**	1	10.7	0.23
9000 l/h Ø 500 mm outlet 1½"	**15780**	1	17.5	0.37
14000 l/h Ø 600 mm outlet 1½"	**15781**	1	19.9	0.49
21000 l/h Ø 750 mm outlet 1½"	**20128**	1	30.4	0.83
21000 l/h Ø 750 mm outlet 2"	**23866**	1	32.1	0.83



Top mounted Cantabric filter

Clear lid & threaded locking ring in ABS, supplied with side mounted multiport valve.

	Code	Standard Pack	Standard Weight in kg	Standard Volume in m^3
With multiport side valve				
6.000 l/h Ø 400 mm outlet 1½"	**22398**	1	9.0	0.15
9,000 l/h Ø 500 mm outlet 1½"	**15782**	1	15.8	0.29
14,000 l/h Ø 600 mm outlet 1½"	**15783**	1	17.8	0.40
21,000 l/h Ø 750 mm outlet 2"	**15784**	1	29.0	0.67
Without multiport valve				
30,000 l/h Ø 900 mm outlet 2½"	**22402**	1	49.0	1.30

Complies with Standard
EN 16713-01

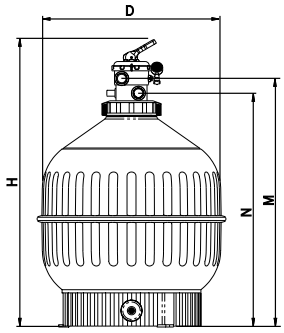

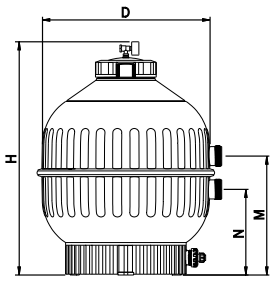

	Top mounted					Side mounted				
	22399	**15780**	**15781**	**20128**	**23866**	**22398**	**15782**	**15783**	**15784**	**22402**
Ø D (mm)	400	500	600	750	750	400	500	600	750	900
H (mm)	894	1009	1069	1239	1250	715	800	875	1045	1215
M (mm)	744	829	894	1064	1098	380	415	445	575	675
N (mm)	680	765	830	1000	1023	255	290	320	345	405
Connections	1½"	1½"	1½"	1½"	2"	1½"	1½"	1½"	2"	2½"
Flow rate (m^3/h)	6	9	14	21	21	6	9	14	21	30
Approx. pool volume (m^3) (8 hours)*	48	72	112	168	168	48	72	112	168	240
Sand load (kg)	60	100	150	300	300	60	100	150	300	550
Grade 1 glass load (57011) (kg)	50	88	100	200	200	50	88	100	200	375
Grade 3 glass load (57013) (kg)	0	0	25	50	50	0	0	25	50	100
Net weight (kg)	8	14	15	23	25	7	12	14	24	34
Package volume (m^3)	0.2	0.37	0.49	0.83	0.83	0.15	0.29	0.4	0.67	1.3

Fitted with sand dump port of Ø 2" in Ø 750 mm & Ø 900 mm models, and of 1½" in Ø 400, Ø 500 & Ø 600 mm models.
* 8 hours turnover rate.

BLOW-MOULDED SAND FILTERS

Complies with Standard
EN 16713-01

Blow-moulded in a single seamless piece of plastic. Fitted with a pressure gauge and integrated air purge and manual water drain. Selector valve included. Maximum working pressure: 2.5 kg/cm² for filter Ø 380 mm, Ø 430 mm and Ø 480 mm, and 2 kg/cm² for filter Ø 560 mm and Ø 660 mm Sand- and glass-compatible (see page 166). Complies with filtration requirements as per standard EN 16713-1.



Optional:
Standard American sizes

Millennium filters with Top mounted valve

	Code	Standard Pack	Standard Weight in kg	Standard Volume in m³
Ø 380 mm - 5500 l/h outlet 1½"	**33814**	1	12.0	0.17
Ø 430 mm - 7000 l/h outlet 1½"	**33815**	1	14.0	0.17
Ø 480 mm - 9000 l/h outlet 1½"	**33816**	1	16.0	0.24
Ø 560 mm - 12000 l/h outlet 1½"	**33817**	1	17.0	0.35
Ø 660 mm - 17000 l/h outlet 1½"	**33818**	1	24.5	0.52



Millennium filters with side mounted valve

	Code	Standard Pack	Standard Weight in kg	Standard Volume in m³
Ø 380 mm - 5500 l/h outlet 1½"	**35321**	1	10.5	0.13
Ø 430 mm - 7000 l/h outlet 1½"	**22497**	1	13.0	0.13
Ø 480 mm - 9000 l/h outlet 1½"	**22499**	1	16.0	0.18
Ø 560 mm - 12000 l/h outlet 1½"	**22501**	1	18.0	0.26
Ø 660 mm - 17000 l/h outlet 1½"	**28254**	1	29.0	0.42



Millennium model monobloc with top mount MPV

	Code	Standard Pack	Standard Weight in kg	Standard Volume in m³
Ø 380 mm - Sena 1/3 HP 230 V II	**27805**	1	27.0	0.33
Ø 430 mm - Sena 1/3 HP 230 V II	**23342**	1	27.0	0.33
Ø 480 mm - Sena ½ HP 230 V II	**23343**	1	31.0	0.43
Ø 560 mm - Sena ¾ HP 230 V II	**23344**	1	35.0	0.50
Ø 660 mm - Sena 1.25 HP	**28299**	1	41.0	0.59



Millennium model monobloc with side mount MPV

	Code	Standard Pack	Standard Weight in kg	Standard Volume in m³
Ø 380 mm - Sena 1/3 HP 230 V II	**27804**	1	28.0	0.33
Ø 430 mm - Sena 1/3 HP 230 V II	**23348**	1	28.0	0.33
Ø 480 mm - Sena ½ HP 230 V II	**23349**	1	31.0	0.43
Ø 560 mm - Sena ¾ HP 230 V II	**23350**	1	35.0	0.50
Ø 660 mm - Sena 1.25 HP	**28301**	1	41.0	0.59

BLOW-MOULDED SAND FILTERS

Millennium filters

Top mounted | **Side mounted** | **Top mounted monobloc** | **Side mounted monobloc**



A

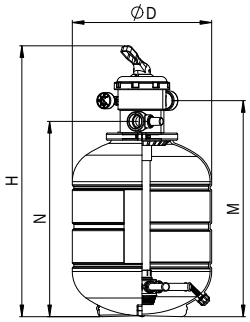

B

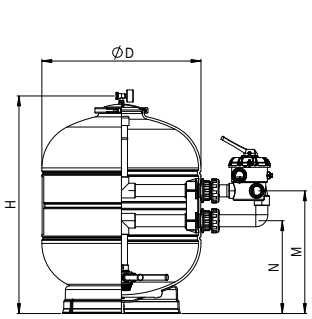

C

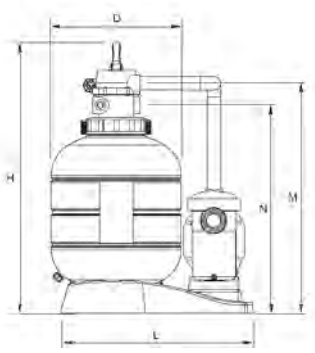

D

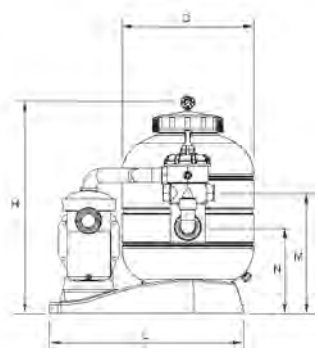

	A - Top mounted filter					B - Side mounted filter					C - Top mounted monobloc					D - Side mounted monobloc				
	33814	33815	33816	33817	33818	35321	22497	22499	22501	28254	27805	23342	23343	23344	28299	27804	23348	23349	23350	28301
Ø D (mm)	380	430	480	560	660	380	430	480	560	660	380	430	480	560	660	380	430	480	560	660
H (mm)	820	835	870	945	1050	615	655	682	770	900	905	955	975	1055	1125	685	735	745	830	962
M (mm)	650	665	700	775	880	225	265	292	380	510	735	815	835	915	990	390	415	410	460	570
N (mm)	585	600	635	710	815	100	140	167	255	385	670	735	755	815	925	265	290	285	335	510
Length L (mm)	-	-	-	-	-	-	-	-	-	-	710	715	835	835	835	710	715	835	835	835
Connections	1"1/2	1"1/2	1"1/2	1"1/2	1"1/2	1"1/2	1"1/2	1"1/2	1"1/2	1"1/2	1"1/2	1"1/2	1"1/2	1"1/2	1"1/2	1"1/2	1"1/2	1"1/2	1"1/2	1"1/2
Flow rate (m^3/h)	5.5	7	9	12	17	5.5	7	9	12	17	5.5	7	9	12	17	5.5	7	9	12	17
Pool volume approx. (m^3)	up to 40	40-50	50-75	75-100	140	up to 40	40-50	50-75	75-100	140	up to 40	40-50	50-75	75-100	140	up to 40	40-50	50-75	75-100	140
Sand load (kg)	± 45	± 70	± 80	± 110	± 180	± 45	± 70	± 80	± 110	± 180	± 45	± 70	± 80	± 110	± 180	± 45	± 70	± 80	± 110	± 180
Grade 1 glass load (57011) (kg)	± 40	± 60	± 70	± 90	± 125	± 40	± 60	± 70	± 90	± 125	± 40	± 60	± 70	± 90	± 125	± 40	± 60	± 70	± 90	± 125
Grade 3 glass load (57013) (Kg)	0	0	0	0	25	0	0	0	0	25	0	0	0	0	25	0	0	0	0	25
Maximum pressure (kg/cm^2)	2.5	2.5	2.5	2	2	2.5	2.5	2.5	2	2	2.5	2.5	2.5	2	2	2.5	2.5	2.5	2	2
Net weight (kg)	12	13.5	15	16.5	24	10	12	15	17.5	28	27	27	31	35	41	28	28	31	35	41
Package volume (m^3)	0.17	0.17	0.24	0.35	0.52	0.13	0.13	0.18	0.26	0.42	0.33	0.33	0.43	0.50	0.59	0.33	0.33	0.43	0.50	0.59

	Millennium / Sena				
Side monobloc	**27804**	**23348**	**23349**	**23350**	**28301**
Top monobloc	**27805**	**23342**	**23343**	**23344**	**28299**
Ø (mm)	380	430	480	560	660
Pump	Sena	Sena	Sena	Sena	Sena
Power (HP)	1/3	1/3	½	¾	1.25
Voltage (V)	230 II	230 II	230 II	230 II	230 II
Frequency (Hz)	50	50	50	50	50

+ info
PDB Product Database
Further information on **PRODUCTS**
www.astralpool.com

BLOW-MOULDED SAND FILTERS



SkyPool filter monoblock with top outlet

Made from plastic with a clamp lid, multi-way valve, pressure gauge, manual air outlet and water purge. White. Injection-moulded black base. Maximum working pressure: 2 kg/cm^2. Complies with filtration requirements as per standard EN 16713-1.

	Code	Standard Pack	Standard Weight in kg	Standard Volume in m^3
Ø 300 mm - P-XPERT-4	**M00504**	1	12	0.11
Ø 400 mm - P-XPERT-6	**M00505**	1	14	0.22
Ø 400 mm - P-XPERT-8	**M00506**	1	15	0.22
Ø 500 mm - P-XPERT-10	**M00507**	1	21	0.34
Ø 500 mm - P-XPERT-14	**M00661**	1	25	0.34

Complies with Standard
EN 16713-01

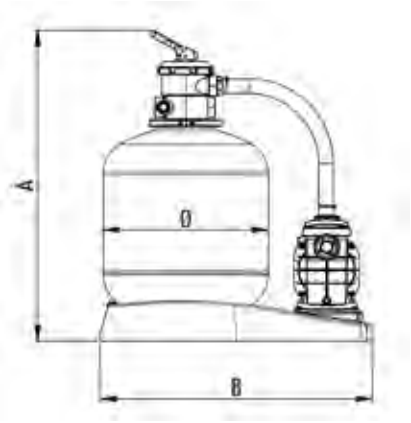

	SkyPool / P-XPERT				
Top monobloc	**M00504**	**M00505**	**M00506**	**M00507**	**M00661**
A (mm)	640	760	760	870	870
B (mm)	520	830	830	830	830
Ø (mm)	300	400	400	500	500
Pump (HP)	P-XPERT4	P-XPERT6	P-XPERT8	P-XPERT10	P-XPERT14
Connections	Ø 38	Ø 38	Ø 38	1½"	1½"
Flow (m^3/h)	4	6	7	9	11
Power (W)	150	340	490	600	660
Filtration speed (m^3/m^2/h)	60	50	60	50	60
Sand 0.4-0.8 mm (Kg)	± 25	± 40	± 40	± 100	± 100
Weight (Kg)	12	14	15	21	25
Volume (m^3)	0.102	0.226	0.226	0.344	0.344

+ info
Further information on **PRODUCTS**
www.astralpool.com

LAMINATED SAND FILTERS

Filters manufactured in fibreglass and polyester resin. With a gelcoat external finish. As a result, the body is highly resistant, durable and has an excellent finish. Internal components and accessories in high quality engineering plastics. Compatible with sand and glass, among others (see page 166). They comply with filtration requirements as per standard EN 16713-1.



Complies with Standard
EN 16713-01

Atlas filter

Sand and glass filters, among others, made from reinforced polyester. Complies with filtration requirements as per standard EN 16713-1.

Technical features:

- Made of polyester resin and fibreglass.
- Excellent finish with gel-coat colour RAL 8029.
- The filter has been designed with higher coefficient of security, to guarantee a perfect operation.
- The union of the two bodies of the filter is carried out through a seal specially reinforced with fibreglass and polyester resin.
- Transparent plastic cover highly resistant to chemicals.
- High reliability screw-in cover.
- Fitted with 1" collector arms and diffuser made from unplasticized PVC.
- Interior pipe with tubes of PN-16.
- 2½" sand discharge outlet.
- Fitted with pressure gauge, air purge and manual water drain.
- Connections to multiport valve with six positions: filter, backwash, rinse, recirculate, waste and closed.
- Innovation by AstralPool: the filter has a built-in safety valve to prevent pressure surges.
- Maximum pressure: 2.5 kg/cm^2.

	Code	Pack. Standard	Weight kg Standard*	Volume in m^3 Standard*
Includes multiport valve				
Ø 500 mm outlet 1½"	**36596**	1	20	0.29
Ø 600 mm outlet 1½"	**36597**	1	25	0.41
Ø 750 mm outlet 2"	**36598**	1	33	0.77
Multiport valve not included				
Ø 900 mm outlet 2½"	**36599**	1	51	1.23

* Figures without valve

Code	36596	36597	36598	36599
Ø Filter (mm)	500	600	750	900
Connections	1$^1/_2$"		2"	2$^1/_2$"
Filtering surface (m^2)	0.19	0.30	0.44	0.64
Filtering velocity (m^3/h/m^2)	50			
Flow rate (m^3/h)	9.5	15	22	30
Maximum pressure (kg/cm^2)	2.5			
Sand load (kg)	120	190	360	580
Grade 1 glass load (57011) (kg)	100	150	225	375
Grade 3 glass load (57013) (kg)	0	0	50	100
Net weight (kg)	20	25	33	51









Sand drain of 2 ½" and water drain of ¾" with security valve.

LAMINATED SAND FILTERS

Europe Pro - Pro Long filters

Filters manufactured in fibreglass and polyester resin Complies with filtration requirements as per standard EN 16713-1. Sand and glass compatible (see page 166).

- Filter colour (Ral5015)
- ¼" purge valve.
- 2 ½" sand discharge
- Polyester or methacrylate cover with screws.
- Diameter of top access: 285 mm.
- Maximum pressure: 2.5 bar.



64990



64986



64998



64994

	Code	Pack. Standard	Weight kg Standard*	Volume in m³ Standard*
Pro version				
With methacrylate cover				
9500 l/h Ø 500 mm output 1½"	**64990**	1	15	0.33
15000 l/h Ø 600 mm output 2"	**64991**	1	20	0.45
22000 l/h Ø 750 mm output 2"	**64992**	1	25	0.83
30000 l/h Ø 900 mm output 2½"	**64993**	1	46	1.43
With polyester cover				
9500 l/h Ø 500 mm output 1½"	**64986**	1	15	0.33
15000 l/h Ø 600 mm output 2"	**64987**	1	20	0.45
22000 l/h Ø 750 mm output 2"	**64988**	1	25	0.83
30000 l/h Ø 900 mm output 2½"	**64989**	1	46	1.43
Pro Long version				
With methacrylate cover				
9500 l/h Ø 500 mm output 1½"	**64998**	1	23	0.33
15000 l/h Ø 600 mm output 2"	**64999**	1	26	0.45
22000 l/h Ø 750 mm output 2"	**65000**	1	34	0.83
30000 l/h Ø 900 mm output 2½"	**65002**	1	65	1.43
With polyester cover				
9500 l/h Ø 500 mm output 1½"	**64994**	1	23	0.33
15000 l/h Ø 600 mm output 2"	**64995**	1	26	0.45
22000 l/h Ø 750 mm output 2"	**64996**	1	34	0.83
30000 l/h Ø 900 mm output 2½"	**64997**	1	65	1.43

* Figures without valve

	Pro version				Pro Long version			
With methacrylate cover	**64990**	**64991**	**64992**	**64993**	**64998**	**64999**	**65000**	**65002**
With polyester cover	**64986**	**64987**	**64988**	**64989**	**64994**	**64995**	**64996**	**64997**
Ø D (mm)	500	600	750	900	500	600	750	900
Connection	1½"	2"	2"	2½"	1½"	2"	2"	2½"
Selector valve code	**00599**	**28476**	**28512**	**24837**	**00599**	**28476**	**28512**	**24837**
Filtration surface area (m²)	0.19	0.3	0.44	0.64	0.19	0.3	0.44	0.64
Filtration velocity (m³/h/m²)	50				50			
Flow (m³/h) at 50 m³/h/m²	9.5	15	22	30	9.5	15	22	30
Maximum pressure (kg/cm²)	2.5				2.5			
Sand load (kg)	120	190	360	580	155	240	430	615
Grade 1 glass load (57011) (kg)	100	150	250	375	100	150	275	400
Grade 3 glass load (57013) (kg)	0	0	50	100	25	50	75	100
Net weight (kg)	15	20	25	46	20	25	33	51
Depth of filter bed (mm)	390	445	530	645	520	565	620	680

Complies with Standard
EN 16713-01

Filtration bed
0.6 m

LAMINATED SAND FILTERS



Complies with Standard
EN 16713-01

RapidPool filters

Laminated in reinforced polyester with fibreglass. Red, polypropylene base, screw-free lid, cap for sand and water discharge, pressure gauge and air purge incorporated in the lid and side selector valve. Maximum filtration speed 50/h/m². Maximum pressure: 2.5 bar. Sand and glass compatible (see page 166).

	Code	Standard Pack	Standard Weight in kg	Standard Volume in m³
Top mounted valve version				
6000 l/h Ø 400 mm outlet 1½"	**32427**	1	19	0.200
9000 l/h Ø 500 mm outlet 1½"	**32428**	1	25	0.355
15000 l/h Ø 650 mm outlet 1½"	**32429**	1	34	0.600
24000 l/h Ø 800 mm outlet 2"	**33849**	1	45	1.050
Side mounted valve version				
6000 l/h Ø 400 mm outlet 1½"	**00488**	1	19	0.150
9000 l/h Ø 500 mm outlet 1½"	**00489**	1	25	0.280
15000 l/h Ø 650 mm outlet 1½"	**00490**	1	34	0.500
24000 l/h Ø 800 mm outlet 2"	**00491**	1	45	0.880

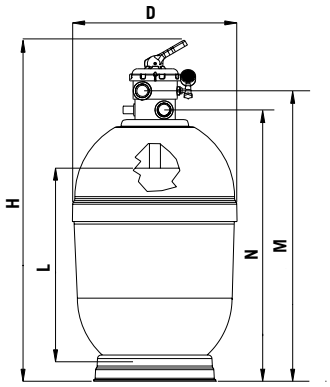

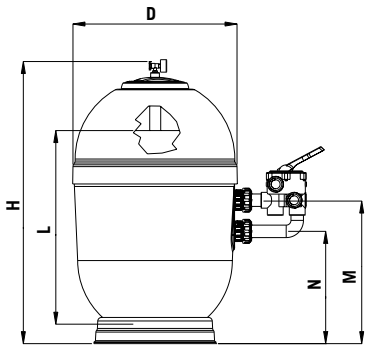

	With Top mounted multiport valve				With multiport valve			
	32427	**32428**	**32429**	**33849**	**00488**	**00489**	**00490**	**00491**
Ø Filter (mm)	400	500	650	800	400	500	650	800
H (mm)	1020	1165	1285	1566	860	1032	1126	1272
M (mm)	850	995	1115	1355	442	527	552	592
N (mm)	790	935	1055	1279	317	402	427	362
Connections	1½"	1½"	1½"	2"	1½"	1½"	1½"	2"
Flow (m³/h) at 50 m³/h/m²	6	9	15	24	6	9	15	24
Pool volume (m³) (8 h)	48	72	120	120	48	72	120	192
Sand load (kg)	60	130	255	445	60	130	255	445
Grade 1 glass load (57011) (kg)	50	100	175	275	50	100	175	275
Grade 3 glass load (57013) (kg)	0	0	25	75	0	0	25	75
Sand height (mm)	545	571	650	785	545	571	650	785
Maximum pressure (kg/cm²)	2.5	2.5	2.5	2.5	2.5	2.5	2.5	2.5
Net weight (kg)	19	25	34	44	15	22	30	45
Package volume (m³)	0.20	0.355	0.60	1.05	0.16	0.3	0.53	0.9

+ info PDB Product Database
Further information on **PRODUCTS**
www.astralpool.com

LAMINATED SAND FILTERS







Aster filters

Filter laminated in polyester and fibreglass. Grey, polypropylene base, screw-free lid, cap for sand and water discharge, pressure gauge and side selector valve. Maximum pressure 2.5 bar. Maximum filtration speed 50/h/m². Complies with filtration requirements as per standard EN 16713-1. Sand and glass compatible (see page 166).

	Code	Standard Pack	Standard Weight in kg	Standard Volume in m³
With top mounted multiport valve				
5000 l/h Ø 350 mm outlet 1½"	**30768**	1	17	0.13
8000 l/h Ø 450 mm outlet 1½"	**30769**	1	20	0.23
9000 l/h Ø 500 mm outlet 1½"	**30770**	1	22	0.28
14000 l/h Ø 600 mm outlet 1½"	**30771**	1	27	0.39
15000 l/h Ø 650 mm outlet 1½"	**30772**	1	28	0.45
21000 l/h Ø 750 mm outlet 2"	**33847**	1	35	0.62
32000 l/h Ø 900 mm outlet 2"	**33848**	1	53	1.27
With side mounted multiport valve				
5000 l/h Ø 350 mm outlet 1½"	**00497**	1	18	0.13
8000 l/h Ø 450 mm outlet 1½"	**00498**	1	21	0.23
9000 l/h Ø 500 mm outlet 1½"	**19781**	1	23	0.28
12000 l/h Ø 550 mm outlet 1½"	**32706**	1	27	0.28
14000 l/h Ø 600 mm outlet 1½"	**00499**	1	28	0.39
15000 l/h Ø 650 mm outlet 1½"	**21071**	1	29	0.45
18000 l/h Ø 680 mm outlet 1½"	**28479**	1	30	0.46
21000 l/h Ø 750 mm outlet 2"	**00500**	1	37	0.62
32000 l/h Ø 900 mm outlet 2"	**08133**	1	55	1.27
Without multiport valve				
31000 l/h Ø 900 mm outlet 2½"	**00501**	1	53	1.27

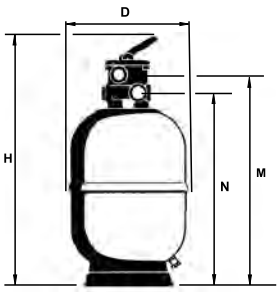

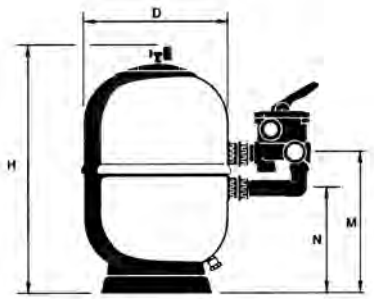

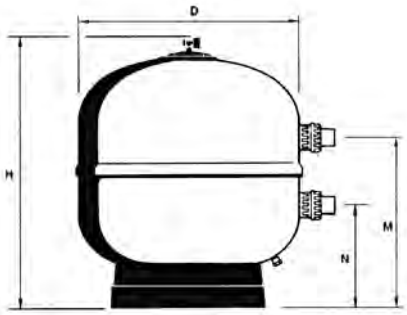

Complies with Standard
EN 16713-01

	With Top mounted multiport valve							With multiport valve									Without valve
	30768	30769	30770	30771	30772	33847	33848	00497	00498	19781	32706	00499	21071	28479	00500	08133	00501
Ø D (mm)	350	450	500	600	650	750	900	350	450	500	550	600	650	680	750	900	900
H (mm)	910	965	960	1005	1060	1184	1344	780	795	770	825	850	880	915	945	1050	1050
M (mm)	740	795	790	835	890	973	1133	420	430	415	455	455	480	525	555	635	660
N (mm)	680	785	730	775	830	897	1057	295	305	290	330	330	355	400	325	365	390
Connections	1½"	1½"	1½"	1½"	1½"	2"	2"	1½"	1½"	1½"	1½"	1½"	1½"	1½"	2"	2"	2½"
Flow (m³/h) at 50 m³/h/m²	5	8	9	14	15	21	31	5	8	9	12	14	15	18	21	30	30
Pool volume (m³) (8 h)	40	64	72	112	120	168	240	40	64	72	96	112	120	144	168	240	240
Sand load (kg)	50	70	90	110	200	290	500	50	70	90	110	125	200	210	290	500	500
Grade 1 glass load (57011) (kg)	50	50	75	100	150	175	325	50	50	75	100	100	150	150	175	325	325
Grade 3 glass load (57013) (kg)	0	0	0	0	0	50	75	0	0	0	0	0	0	25	50	75	75
Maximum pressure (kg/cm²)	2.5	2.5	2.5	2.5	2.5	2.5	2.5	2.5	2.5	2.5	2.5	2.5	2.5	2.5	2.5	2.5	2.5
Net weight (kg)	17	20	22	27	28	35	53	18	21	23	27	28	29	30	37	55	53
Package volume (m³)	0.13	0.23	0.28	0.39	0.45	0.62	1.27	0.13	0.23	0.28	0.28	0.39	0.45	0.46	0.62	1.26	1.27

+ info
Further information on **PRODUCTS**
www.astralpool.com
PDB Product Database

LAMINATED SAND FILTERS





Vesubio filters

The Vesubio range has been expanded to reach both the public and private pool sectors. Filters manufactured using simultaneous projection of resin and fibreglass. Threaded lid with high-resistance screws. Ø 210mm top mouth. Ø 1050mm and Ø 1200mm models also available with a top mouth of Ø 400mm. Maximum pressure 2.5 bar. Sand and glass compatible (see page 166).

	Code	Standard Pack	Standard Weight in kg	Standard Volume in m³
Side mount version				
8000 l/h Ø 450 mm outlet 50 mm	**15785**	1	16	0.200
9000 l/h Ø 500 mm outlet 50 mm	**19353**	1	20	0.260
14000 l/h Ø 600 mm outlet 50 mm	**15786**	1	23	0.357
22000 l/h Ø 750 mm outlet 63 mm	**15787**	1	32	0.595
32000 l/h Ø 900 mm outlet 75 mm	**15788**	1	48	1.003
43000 l/h Ø 1050* mm outlet 75 mm	**15789**	1	97	2.052
43000 l/h Ø 1050** mm outlet 75 mm	**32391**	1	97	2.052
56000 l/h Ø 1200* mm outlet 90 mm	**15790**	1	130	2.450
56000 l/h Ø 1200** mm outlet 90 mm	**32392**	1	140	2.430
Top mount version				
8000 l/h Ø 450 mm outlet 50 mm	**32430**	1	19	0.280
9000 l/h Ø 500 mm outlet 50 mm	**32431**	1	23	0.350
14000 l/h Ø 600 mm outlet 50 mm	**32432**	1	26	0.480
22000 l/h Ø 750 mm outlet 63 mm	**33850**	1	40	0.787
32000 l/h Ø 900 mm outlet 63 mm	**33851**	1	56	1.276

* Small upper lid of Ø 210 mm
** Upper lid of Ø 400 mm

Filters with a side connection up to Ø 1050 mm can use a multiport selector valve (see page 164).
Ø 900 and Ø 1050 mm filters with side outlets are supplied without multiport valve.

UNE-EN 16713-01
Complies with Standard
EN 16713-01

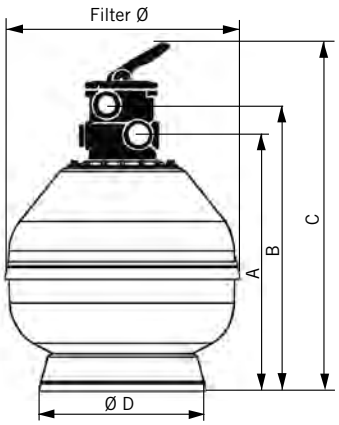

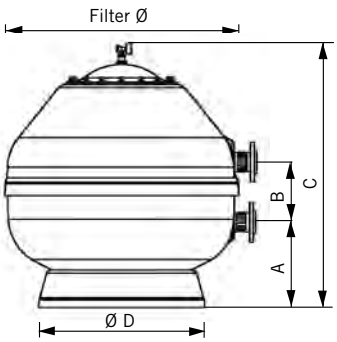

	With Top mounted multiport valve					With multiport valve								
	32430	**32431**	**32432**	**33850**	**33851**	**15785**	**19353**	**15786**	**15787**	**15788**	**15789**	**32391**	**15790**	**32392**
Ø Filter (mm)	450	500	600	750	900	450	500	600	750	900	1050	1050	1200	1200
A (mm)	650	690	790	837	987	265	305	325	300	325	435	410	490	490
B (mm)	710	750	850	913	1063	125	125	125	230	270	270	270	270	270
C (mm)	880	920	1020	1124	1274	725	765	865	895	1080	1110	1235	1235	1360
D (mm)	347	400	400	490	625	347	400	400	490	625	760	775	855	940
Filtration surface area (m²)	0.16	0.19	0.30	0.44	0.64	0.16	0.19	0.30	0.44	0.64	0.86	0.86	1.13	1.13
Connections	1½"	1½"	1½"	2"	2"	1½"	1½"	1½"	2"	2½"	2½"	2½"	90	90
Flow (m³/h) at 50 m³/h/m²	8	9	14	22	32	8	9	14	22	32	43	43	56	56
Pool volume (m³) (8 hours)	64	72	112	176	256	64	72	112	176	256	344	344	448	448
Sand load (kg)	60	95	148	245	415	60	95	148	245	415	660	660	1000	1000
Grade 1 glass load (57011) (kg)	50	75	125	150	275	50	75	125	150	275	500	500	775	775
Grade 3 glass load (57013) (kg)	0	0	0	50	50	0	0	0	50	50	125	125	200	200

HIGH-PERFORMANCE LAMINATED SAND FILTERS

Filtration bed 1.2 m

Laminated filters with higher filter bed for enhanced performance and filtration quality, both for single-layer and multi-layer filters. There are various options to help choose the model that best suits usage and maintenance requirements. Compatible with sand, glass and anthracite, among others (see page 167). They comply with filtration requirements as per standard EN 16713-1.



Complies with Standard **EN 16713-01**

Norma filters

Filter laminated in fibreglass-reinforced polyester (FRP). For single layer or multilayer filling. Maximum pressure 2.5 bar. The Norma filter is designed according to Germany's DIN 19643/19605 standard. Available with a plate collector system (0.5 mm slot) including a manhole cover for inspection of the bottom. Fitted with a sight glass, Ø 200mm top lid for loading sand and Ø 200mm or Ø 400mm side mouth depending on model. Fitted with pressure gauge, air purge and manual water drain. Interiors in PVC and PP. A4 screws and EPDM gaskets. Standard colour: ivory. Options. Vinyl ester coating (ozone resistant, concentrations <0.4 ppm and max. temp 40ºC). Sand and glass compatible (see page 166).

Maximum pressure: 2.5 kg/cm².

Diameter Ø mm	Filtration velocity	Outlet Ø mm	Flow rate m³/h at 30 m³/h/m²	Code	Standard Packaging	Standard Weight Kg	Standard Volume m³
650	30	90-75	10	**08142P**	1	100	1.33
800	30	90-75	15	**08143P**	1	125	2.00
1.000	30	140-110	23	**08144P**	1	145	3.00
1.200	30	140-140	34	**08145P**	1	177	5.50

Ø 650 mm
Ø 800 mm

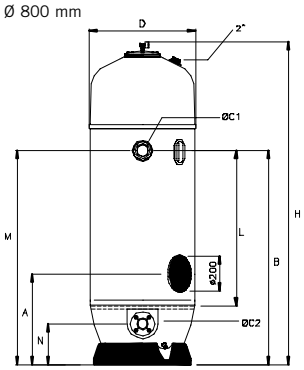

Ø 1000 mm

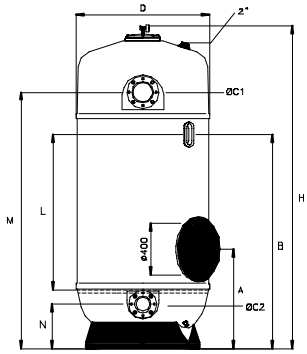

Ø 1200 mm

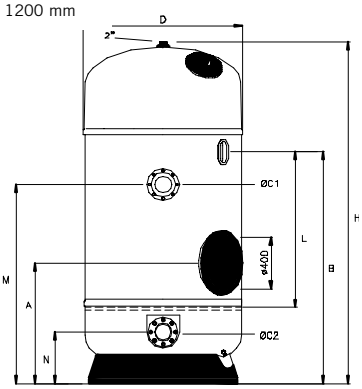



TECHNICAL FEATURES

		08142P	08143P	08144P	08145P
D (mm)		650	800	1000	1200
A (mm)		680	700	770	950
B (mm)		1660	1640	1655	1790
H (mm)		2480	2480	2490	2640
L (mm)		1200	1200	1200	1200
M (mm)		1650	1650	1980	1600
N (mm)		320	320	340	400
Ø C1 (mm)		90	90	140	140
Ø C2 (mm)		75	75	110	140
Flow (m³/h) at 30 m³/h/m²		10	15	23	33
MULTILAYER	**Anthracite 0.8 – 1.6 mm (l)**	148	250	390	564
	Sand 0.4 – 0.8 mm (Kg)	160	271	420	611
	Gravel 1 – 2 mm (Kg)	46	78	120	175
	Gravel 3 – 5 mm (Kg)	46	78	120	175
SINGLE LAYER	**Sand load (kg)**	451	767	1215	1763
	Gravel load (kg)	46	78	120	175
	Grade 1 glass load (57011) (kg)	275	500	750	1125
	Grade 2 glass load (57012) (kg)	100	150	250	350
	Grade 3 glass load (57013) (kg)	100	175	275	375

Filtration bed 1.2 m

HIGH-PERFORMANCE LAMINATED SAND FILTERS

Delta 1200 filters



Complies with Standard **EN 16713-01**

Filter laminated in polyester and fibreglass available in diameters of 650, 800, 1000 and 1200 mm. It has a 1.2-m filter bed and is available with an arm collector system and a plate collector system. Complies with filtration requirements as per standard EN 16713-1.

- DN 200 filter lid with quick-locking system for 650 and 800 models and DN 400 bolt down lid for 1000 and 1200 models.
- DN200 lateral manhole with bolt down cover.
- Filter interior left with natural resin finish.
- EASTAR sightglass as standard. Further sight glasses are available on request.
- Inner pipe and fittings in PVC, PP and ABS.
- Pressure gauge included in filter lid.
- Gaskets in EPDM and all screw fittings in stainless steel.
- Vinylester option. In this case, internal layer is manufactured from vinylester resin (and not only the top layer in contact with the water), to a maximum chemical resistance of 0.4 ppm of ozone dissolved and to a maximum temperature 50º.
- Comes in RAL 5024 blue.

Maximum pressure: 2.5 kg/cm². — **Conventional collector arms. Arm slots 0.3 mm**

Diameter Ø mm	Outlet Ø mm	Flow m³/h 40m³/h/m²	Code	Standard Packaging	Standard Weight Kg	Standard Volume m³
650	1 1/2"	13.3	**36680**	1	100	1.50
800	2"	20.1	**36681**	1	110	1.94
1000	2 1/2"	31.4	**36682**	1	120	2.31
1200	90	45.2	**36683**	1	160	3.54

Maximum pressure: 2.5 kg/cm². — **Nozzle collector plate. Nozzle slots 0.5 mm**

Diameter Ø mm	Outlet Ø mm	Flow m³/h 40m³/h/m²	Code	Standard Packaging	Standard Weight Kg	Standard Volume m³
650	1 1/2"	13.3	**36688**	1	114	1.50
800	2"	20.1	**36689**	1	131	1.94
1000	2 1/2"	31.4	**36690**	1	150	2.31
1200	90	45.2	**36691**	1	200	3.54

	Collector arms				Nozzle collector plate			
	36680	**36681**	**36682**	**36683**	**36688**	**36689**	**36690**	**36691**
Sand load (kg)	451	767	1325	1763	451	767	1325	1763
Gravel load (kg)	86	156	300	350	46	78	120	175
Grade 1 glass load (57011) (kg)	325	500	850	1125	300	450	750	1050
Grade 2 glass load (57012) (kg)	100	175	275	375	100	150	250	350
Grade 3 glass load (57013) (kg)	100	175	300	400	100	175	275	375

Filtration bed
1 m

HIGH-PERFORMANCE LAMINATED SAND FILTERS

Delta 1000 filters



Complies with Standard
EN 16713-01

Filter laminated in polyester and fibreglass available in diameters of 650, 800, 1000 and 1200 mm. It has a 1-m filter bed and is available with an arm collector system and a plate collector system. Complies with filtration requirements as per standard EN 16713-1.

- DN 200 filter lid with quick-locking system for 650 and 800 models and DN 400 bolt down lid for 1000 and 1200 models.
- DN200 lateral manhole with bolt down cover.
- Filter interior left with natural resin finish.
- Optional methacrylate sight glass on the Delta 10 model. More than one sight glass can be placed if desired.
- Inner pipe and fittings in PVC, PP and ABS.
- Pressure gauge included in filter lid.
- Gaskets in EPDM and all screw fittings in stainless steel.
- Vinylester option. In this case, internal layer is manufactured from vinylester resin (and not only the top layer in contact with the water), to a maximum chemical resistance of 0.4 ppm of ozone dissolved and to maximum temperature 50º.
- Comes in RAL 5024 blue.

Maximum pressure: 2.5 kg/cm².

Conventional collector arms. Arm slots 0.3 mm

Diameter Ø mm	Outlet Ø mm	Flow m³/h 40m³/h/m²	Code	Standard Packaging	Standard Weight Kg	Standard Volume m³
500	1½"	8	**58682**	1	80	1.34
650	1½"	13.3	**36676**	1	80	1.34
800	2"	20.1	**36677**	1	90	1.71
1000	2½"	31.4	**36678**	1	125	2.16
1200	90	45.2	**36679**	1	150	3.29

** Maximum flow and filtration velocity recommended

Maximum pressure: 2.5 kg/cm².

Nozzle collector plate. Nozzle slots 0.5 mm

Diameter Ø mm	Outlet Ø mm	Flow m³/h 40m³/h/m²	Code	Standard Packaging	Standard Weight Kg	Standard Volume m³
650	1½"	13.3	**36684**	1	94	1.34
800	2"	20.1	**36685**	1	111	1.71
1000	2½"	31.4	**36686**	1	155	2.16
1200	90	45.2	**36687**	1	190	3.29

** Maximum flow and filtration velocity recommended

	Collector arms					Nozzle collector plate			
	58682	**36676**	**36677**	**36678**	**36679**	**36684**	**36685**	**36686**	**36687**
Sand load (kg)	245	400	640	990	1425	400	640	990	1425
Gravel load (kg)	60	86	156	300	350	46	78	120	175
Grade 1 glass load (57011) (kg)	175	275	450	725	1000	250	400	600	875
Grade 2 glass load (57012) (kg)	50	75	150	225	325	75	125	200	275
Grade 3 glass load (57013) (kg)	75	100	150	250	350	100	125	200	300

NB: Coding options according to table on page 526

HIGH-PERFORMANCE LAMINATED SAND FILTERS

Delta filters



Fast lid for diameters 500, 650 and 800



Collector arms detail



Lid D.400 for diameters 1000 and 1200



Nozzle plate detail

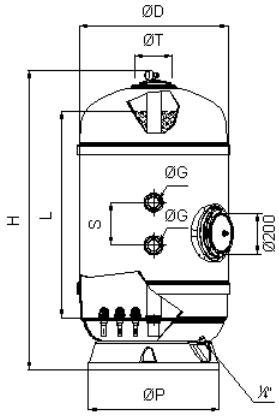

Delta 10 nozzle collector plate

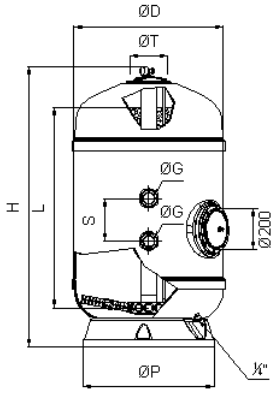

Delta 10 nozzle collector arms

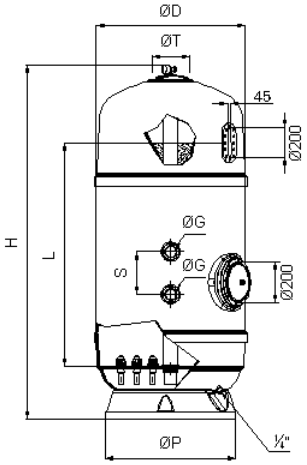

Delta 12 nozzle collector plate

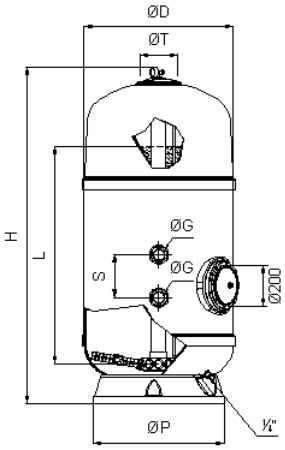

Delta 12 nozzle collector arms

TECHNICAL FEATURES

		DELTA 10									DELTA 12							
		Collector arms					Nozzle collector plate				Collector arms				Nozzle collector plate			
		58682	36676	36677	36678	36679	36684	36685	36686	36687	36680	36681	36682	36683	36688	36689	36690	36691
D (mm)		535	670	820	1.035	1.240	650	800	1.000	1.200	650	800	1.000	1.200	650	800	1.000	1.200
Ø P (mm)		400	490	625	890	1145	490	625	890	1145	585	700	890	1145	585	700	890	1145
H (mm)		1680	1702	1749	1840	1915	1770	1860	1870	1240	1920	1995	2010	2150	1920	1995	2010	2150
L (mm)		-	1000	1000	1000	1000	1000	1000	1000	1000	1200	1200	1200	1200	1200	1200	1200	1200
S (mm)		125	125	230	270	300	125	230	270	300	125	230	270	300	125	230	270	300
Ø T		200	200	200	400	400	200	200	400	400	200	200	400	400	200	200	400	400
Ø G		1 1/2"	1 1/2"	2"	2 1/2"	3"	1 1/2"	2"	2 1/2"	3"	1 1/2"	2"	2 1/2"	3"	1 1/2"	2"	2 1/2"	3"
Flow rate m³/h at 30 m³/h/m²		5.88	9	15	23	34	9	15	23	34	9	15	23	34	9	15	23	34
Flow rate m³/h at 40 m³/h/m²		7,84	12	20	30	45	12	20	30	45	12	20	30	45	12	20	30	45
MULTILAYER	Anthracite 0.8 – 1.6 mm (l)	-	-	-	-	-	-	-	-	-	148	250	387	564	148	250	387	564
	Sand 0.4 – 0.8 mm (Kg)	-	-	-	-	-	-	-	-	-	160	271	419	611	160	271	419	611
	Gravel 1 – 2 mm (Kg)	-	-	-	-	-	-	-	-	-	46	78	120	175	46	78	120	175
	Gravel 3 – 5 mm (Kg)	-	-	-	-	-	-	-	-	-	86	156	300	350	46	78	120	175
SINGLE LAYER	Sand 0.4 – 0.8 mm (Kg)	245	400	640	990	1425	400	640	990	1425	451	767	1325	1763	451	767	1325	1763
	Gravel 1 – 2 mm (Kg)	60	86	156	300	350	46	78	120	175	86	156	300	350	46	78	120	175
	Grade 1 glass load (57011) (kg)	175	275	450	725	1000	250	400	600	875	325	500	850	1125	300	450	750	1050
	Grade 2 glass load (57012) (kg)	50	75	150	225	325	75	125	200	275	100	175	275	375	100	150	250	350
	Grade 3 glass load (57013) (kg)	75	100	150	250	350	100	125	200	300	100	175	300	400	100	175	275	375

Filtration bed 1.2 m

HIGH-PERFORMANCE LAMINATED SAND FILTERS

Artic Plus filter



Range of high-capacity retention filters with optimal backwash performance. Manufactured in polyester with an external gel-coat finish. Body of just two parts; ivory. Maximum working temperature of 50ºC. Internal parts made from PVC plastic. Ø 400 lid to remove sand from bottom part of filter (optional) in Ø 1050 and Ø 1200 versions. Ø 650, 800, 950, 1050 and 1200 filters available with collector arms or nozzle plate. Compatible with sand and glass, among others (see page 166). Complies with filtration requirements as per standard EN 16713-1.

	Code	Standard Pack	Standard Weight in kg	Standard Volume in m^3
Collector arms system				
Ø 650 mm connection 1½"	**36053-100**	1	80	1.45
Ø 800 mm connection 2"	**36054-100**	1	95	1.85
Ø 950 mm connection 2½"	**41373**	1	136	2.54
Ø 1050 mm connection 3"	**36055**	1	145	2.73
Ø 1200 mm connection 4"	**36056**	1	220	4.10

Complies with Standard **EN 16713-01**



Nozzle plate detail



Collector arms detail

	36053	36054	41373	36055	36056
Ø D (mm)	680	825	970	1090	1255
H (mm)	1900	1950	1960	2145	2170
M (mm)	125	230	270	270	270
N (mm)	730	670	665	665	665
L (mm)	1200				
C (mm)	300				
P (mm)	490	625	705	775	940
T (mm)	200			400	
Connections	1½"	2"	2½"	3"	4"
Flow rate (m^3/h)	16.5	25	35	43	56.5
Filtration area (m^2)	0.33	0.50	0.70	0.86	1.13
Sand load (kg)	470	660	1015	1240	1665
Gravel load (kg)	100	165	260	320	410
Grade 1 glass load (57011) (kg)	325	475	725	875	1175
Grade 2 glass load (57012) (kg)	100	150	225	275	375
Grade 3 glass load (57013) (kg)	125	150	250	300	400
Maximum pressure (kg/cm^2)	2.5				
Net weight (kg)	75	90	131	135	210
Water drain	1"	1"	1"	2½"	2½"
Injection-moulded plastic lid	Ø200	Ø200	Ø200	Ø400	Ø400

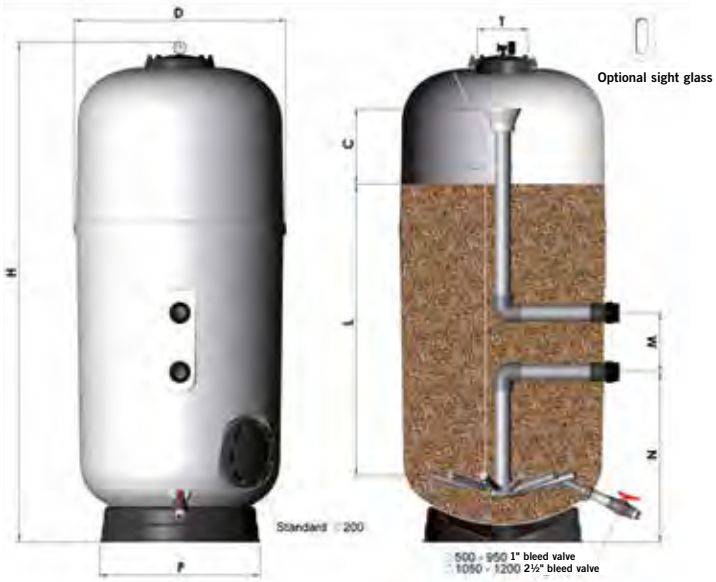

Filtration bed 1 m

HIGH-PERFORMANCE LAMINATED SAND FILTERS

Artic filter



Range of high-capacity retention filters with optimal backwash performance. Manufactured in polyester with an external gel-coat finish. Body of just two parts; ivory. Maximum working temperature of 50ºC. Internal parts made from PVC plastic. Ø 400 lid to remove sand from bottom part of filter (optional) in Ø 1050 and Ø 1200 versions. Ø 650, 800, 950, 1050 and 1200 filters available with collector arms or nozzle plate. Compatible with sand and glass, among others (see page 166). Complies with filtration requirements as per standard EN 16713-1.

	Code	Standard Pack	Standard Weight in kg	Standard Volume in m^3
Collector arms system				
Ø 500 mm connection 1½"	**34029-0100**	1	65	1.30
Ø 650 mm connection 1½"	**34030-0100**	1	70	1.34
Ø 800 mm connection 2"	**34031-0100**	1	75	1.67
Ø 950 mm connection 2½"	**41187**	1	119	2.30
Ø 1050 mm connection 3"	**41188**	1	145	2.42
Ø 1200 mm connection 4"	**41189**	1	165	3.65

Complies with Standard **EN 16713-01**



Nozzle plate detail



Collector arms detail

	34029	34030	34031	41187	41188	41189
Ø D (mm)	535	680	825	970	1090	1255
H (mm)	1650	1700	1750	1760	1895	1970
M (mm)	125	125	230	270	270	270
N (mm)	780	775	685	655	630	665
L (mm)	1000					
C (mm)	300					
P (mm)	400	490	625	705	775	940
T (mm)	200				400	
Connections	1½"	1½"	2"	2½"	3"	4"
Flow rate (m^3/h)	9.5	16.5	25	35	43	56.5
Filtration area (m^2)	0.19	0.33	0.50	0.70	0.86	1.13
Sand load (kg)	225	380	530	830	1015	1360
Gravel load (kg)	50	100	165	260	320	410
Grade 1 glass load (57011) (kg)	150	275	375	600	750	1000
Grade 2 glass load (57012) (kg)	50	75	125	200	250	325
Grade 3 glass load (57013) (kg)	50	100	150	225	275	350
Maximum pressure (kg/cm^2)	2.5	2.5	2.5	2.5	2.5	2.5
Net weight (kg)	60	65	70	109	135	155
Water drain	1"	1"	1"	1"	2½"	2½"
Injection-moulded plastic lid	Ø200	Ø200	Ø200	Ø200	Ø400	Ø400

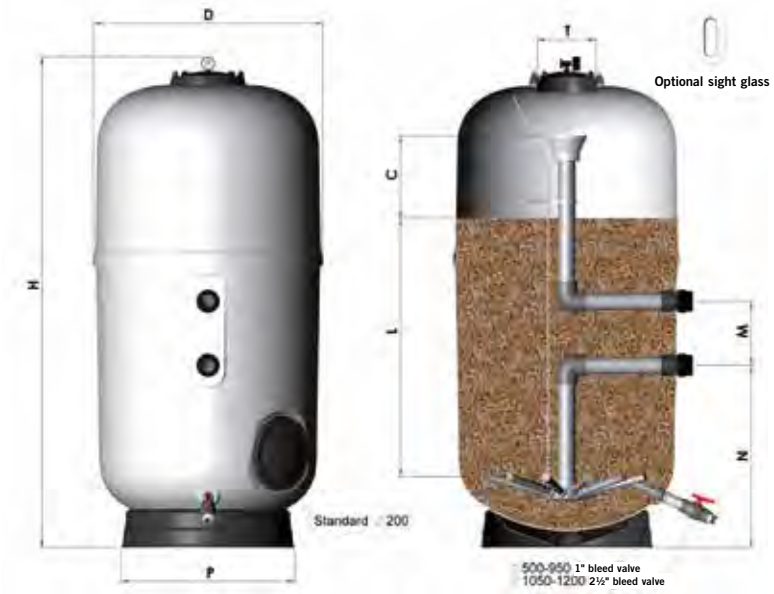

Filter bed depth 0.8 m

HIGH-PERFORMANCE LAMINATED SAND FILTERS



Complies with Standard **EN 16713-01**

Aster filter - high quality of filtration

Laminated filter made of fibreglass and polyester. Filter bed 800 mm in depth. Grey in colour, polypropylene base, fast open lid, water drainage plug, flowmeter and side multiport valve. Maximum pressure 2.5 bar. Top filtration speed of 50 $m^3/h/m^2$. The filter can be used with a single layer or a multi-layer combination of gravel with sand, glass or anthracite. Quick-release lid. Has a 2½" sand discharge out let at the bottom of the filter. Optional sand discharge outlet of 200 mm. Optional vinylester interior finish for treatment with ozone. Maximum temperature 50º.

	Code	Standard Pack	Standard Weight in kg	Standard Volume in m^3
Ø 500 mm output 1½"	**24768-0100**	1	30	0.44
Ø 600 mm output 1½"	**24769-0100**	1	40	0.64
Ø 750 mm output 2"	**24770-0100**	1	60	1.0
Ø 900 mm output 2"	**10003-0100**	1	90	1.6
Ø 900 output 2½"	**10004**	1	90	1.6

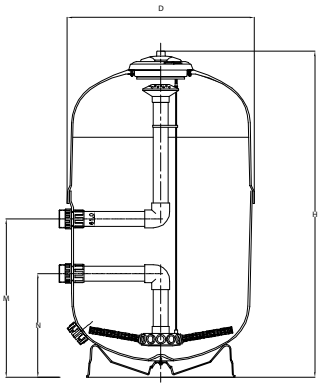

	24768-0100	24769-0100	24770-0100	10003-0100	10004
Ø D (mm)	500	600	750	900	
H (mm)	1365	1370	1435	1400	1435
M (mm)	605	605	665	825	865
N (mm)	480	480	435	595	595
Connections	1½"	1½"	2"	2"	2½"
Flow (m^3/h) at 50 $m^3/h/m^2$	9.5	16.5	21	31	
Pool volume (m^3)	75	120	175	250	
Sand load (kg)	200	300	450	580	
Gravel load (kg)	16	35	65	135	
Grade 1 glass load (57011) (kg)	125	200	300	400	
Grade 3 glass load (57013) (kg)	25	25	50	75	
Maximum pressure (kg/cm^2)	2.5				

Filtration bed 0.6 m



Complies with Standard **EN 16713-01**

Aster filter high filtration with nozzle plate

Filter laminated in polyester and fibreglass. Optional Ø 200mm sand discharge at bottom. Black screw-down lid ¼" water drain at bottom. Maximum pressure 2.5 bar. Maximum temperature 50º.

	Code	Standard Pack	Standard Weight in kg	Standard Volume in m^3
Ø 500 mm output 2"	**24768FT01-110 000**	1	30	0.46
Ø 600 mm output 2"	**24769FT01-110 000**	1	40	0.63
Ø 750 mm output 2"	**24770FT01-110 000**	1	60	0.99
Ø 900 mm output 2"	**10003FT01-110 000**	1	90	1.29
Ø 900 output 2½"	**10004FT01-110 000**	1	90	1.29

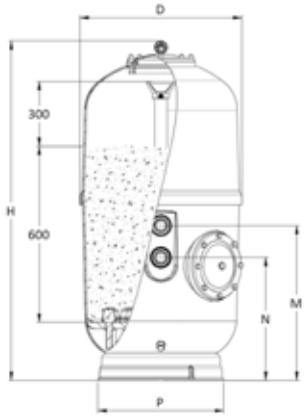

	24768FT01 110 000	24769FT01 110 000	24770FT01 110 000	10003FT01 110 000	10004FT01 110 000
Ø D (mm)	500	600	750	900	
H (mm)	1365	1370	1435	1400	1435
M (mm)	605	605	665	825	865
N (mm)	480	480	435	595	
P (mm)	400	490	625	705	
Connections	1½"	1½"	2"	2"	2½"
Flow (m^3/h) at 50 $m^3/h/m^2$	9.5	16.5	21	31	
Pool volume (m^3)	75	120	175	250	
Sand load (kg)	200	300	450	580	
Gravel load (kg)	16	35	65	135	
Grade 1 glass load (57011) (kg)	125	200	300	400	
Grade 3 glass load (57013) (kg)	25	25	50	75	
Maximum pressure (kg/cm^2)	2.5				

+ info
PDB Product Database
Further information on **PRODUCTS**
www.astralpool.com

BOBBIN-WOUND SAND FILTERS

Filters made of fiberglass and polyester resin with Internal components and accessories in high quality engineering plastics. thanks to its double coating, the resulting body is extremely resistant, durable and reliable. Compatible with sand and glass, among others (see page 166). They comply with filtration requirements as per standard EN 16713-1.





UNE-EN 16713-01
Complies with Standard
EN 16713-01

Berlin filter

Ø 230mm screw-down lid, injection-moulded. Fitted with manual air and water bleed valves, a pressure gauge and a side mounted multiport valve. Maximum filtration speed ($m^3/h/m^2$) Complies with filtration requirements as per standard EN 16713-1. Sand and glass compatible (see page 166).

	Code	Pack. Standard	Weight kg Standard*	Volume in m^3 Standard*
With multiport valve:				
9000 l/h Ø 500 mm outlet 1½"	**00541**	1	17.3	0.24
14000 l/h Ø 600 mm outlet 1½"	**00542**	1	21.8	0.37
21000 l/h Ø 750 mm outlet 2"	**00543**	1	35.1	0.65
Without multiport valve:				
30000 l/h Ø 900 mm outlet 2½"	**00544**	1	53.4	1.01
30000 l/h Ø 900 mm outlet 2"	**15397**	1	53.4	1.01
30000 l/h Ø 900 mm outlet 2" (4 bar)	**28474**	1	67.0	1.01
Without multiport valve and with Ø 400 mm polyester and FV lid:				
43000 l/h Ø 1050 mm outlet Ø 75 mm	**00545**	1	110.0	1.92
56000 l/h Ø 1200 mm outlet Ø 90 mm	**00546**	1	140.0	2.70

* Figures without valve

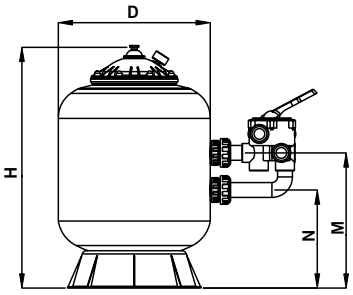

With multiport valve

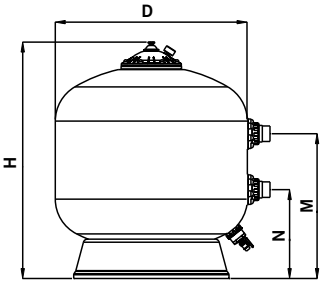

Without multiport valve

	With multiport valve			Without multiport valve				
	00541	**00542**	**00543**	**00544**	**15397**	**28474**	**00545**	**00546**
Ø D (mm)	500	600	750	900	900	900	1050	1200
H (mm)	805	910	1050	1145	1135	1135	1300	1450
M (mm)	450	505	610	685	635	635	810	870
N (mm)	325	380	380	415	405	405	500	560
Connections	1½"	1½"	2"	2½"	2"	2"	*D75	**D90
Flow (m^3/h) at 50 $m^3/h/m^2$	9	14	21	30	30	30	43	56
Pool volume (m^3)	50-75	75-115	115-170	170-240	-	-	240-350	350-450
Sand load (kg)	100	175	300	525	525	525	575	800
Gravel load (kg)	-	-	-	-	-	-	300	300
Grade 1 glass load (57011) (kg)	75	150	200	350	350	350	600	825
Grade 3 glass load (57013) (kg)	0	0	50	75	75	75	175	200
Maximum pressure (kg/cm^2)	2.5	2.5	2.5	2.5	2.5	4	2.5	2.5
Net weight (kg)	15.3	19.8	33.1	51.4	51.4	51.4	100	130
Package volume (m^3)	0.35	0.37	0.65	1.01	1.01	1.01	1.92	2.70

See our wide range of housing according to your filtration needs

COMPACTS WITHOUT INTERIOR INSTALLATION



In-ground compact housings

Stackable to facilitate shipping and storage; streamlined interior to obtain top performance in the smallest possible space. Light cover with reinforced hinges. Prefabricated in polyester and fibreglass with a gelcoat finish. Outside of the cover in green and inside of the housing in ivory.

	Code	Standard Pack	Standard Weight in kg	Standard Volume in m³
Supplied with openings for connections:				
For filters Ø 350 mm	**00615/1**	1	175	2.02
For filters Ø 400-450-500-600 mm	**00616/1**	1	156.5	2.54
For filters Ø 650-750-800 mm	**00618**	1	126.0	3.87



Semi in-ground compact housings

Prefabricated in polyester and fibreglass. Ivory. Fully opening cover.

	Code	Standard Pack	Standard Weight in kg	Standard Volume in m³
For filters Ø 450-500-600 mm	**00619/1**	1	80.0	2.7
For filters Ø 600-450-650-750 mm	**00620/1**	1	145.0	3.2

COMPACTS WITH INTERIOR INSTALLATION



Ramses in-ground compact housing

Embedded housing comprising an injection-moulded reinforced polymer body and lid. Complete and ready-assembled.
Connections: Ø50 PVC tube All pool types of up to 80m³

Components that include:

- 1 hp pump.
- Filter (according to model).
- 6-way top valve.
- Interior PVC connections and valves.

	Code	Standard Pack	Standard Weight in kg	Standard Volume in m³
Ramses with Aster 550 filter	**41910**	1	76	1.18
Ramses with Millennium 560 filter	**69829**	1	68	1.18

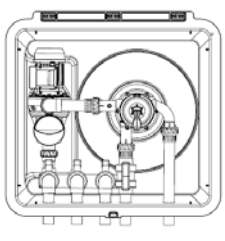

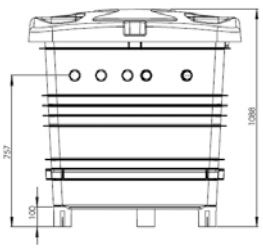

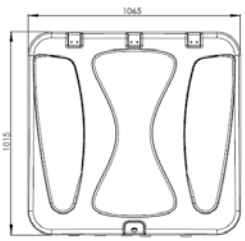

+ info
PDB Product Database
Further information on **PRODUCTS**
www.astralpool.com

COMPACTS WITH INTERIOR INSTALLATION



In-ground compact Keops with salt chlorinator

Embedded housing comprising an injection-moulded reinforced polymer body and lid. Complete and ready-assembled.
Connections: Ø50 PVC tube All pool types of up to 100m³

Components that include:

- Advantages of Victoria Plus Silent 1HP
- Filter (according to model).
- 6-way side valve.
- Compact 100 salt chlorinator.
- Interior PVC connections and valves.

	Code	Standard Pack	Standard Weight in kg	Standard Volume in m³
Keops with salt chlorinator and Cantabric 600 filter	**69832**	1	-	-
Keops with salt chlorinator and Aster 600 filter	**69831**	1	-	-

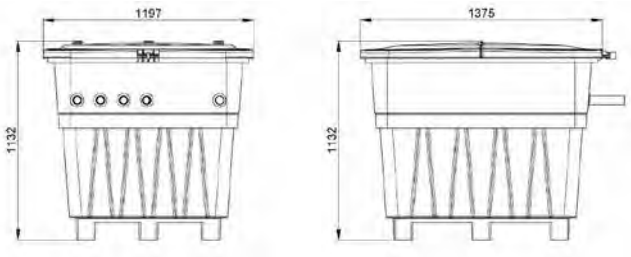







Above ground compacts - Ramses Up

Designed for outdoor installation. Lid with reinforced edge. Size: 149 x 82 x 120.

	Code	Standard Pack	Standard Weight in kg	Standard Volume in m³
Without inner assembly	**61423**	1	25	0.400
With Aster 550 Sena 1 HP S/A	**61423AS55001**	1	-	-

MULTIPORT VALVES



A wide range of valves which offers the New Generation series, the Classic series and Flat series with 1½" and 2" valve configurations. The Magnum series with 2½" and 3" valves completes the range.

Six positions multiport valve

A six positions multiport valve able to perform several functions in a hydraulic circuit: filtration, empty, closed, backwashing and rinsing of the filter. Its extremely functional design means that it can be fitted up to any installation. All joints will be perfectly sealed and it is easy to operate.

Its minimum friction and resistance, maximum safety were decisive factors to choose the best materials of its components: ABS body, lid and handle, PPO distributor, EPDM gaskets, metal parts in stainless steel.

Connection options in multiport valve

Connection options		Connection	Outlets	New Generation			Classic		Flat	Magnum	
											
				1 ½" Eco	1 ½"	2"	1 ½"	2"	1 ½"	2 ½"	3"
Configuration 1 	"Top" inlet and "Bottom" outlet at the base. Commonly used for filters with a Top output valve.	Without connection	Threaded BSP			28509	11542	08938			
			Smooth				00597				
Configuration 2 	"Top" inlet at the base and "Bottom" outlet on one side.	With connection	Threaded BSP								
			Smooth				15385	15389			
		Without connection	Threaded BSP			28510	11366	08939			
			Smooth								
Configuration 3 	Filter inlet "Top" from the MPV side and filter outlet "Bottom" to the MPV base. This configuration can be supplied with pipework and connections for side mounting.	With connection	Threaded BSP								
			Smooth		20569	28512	00599	07444	34543	24837	
			Threaded NPT		22355	30788	06673-0700	09848		24840	
		Without connection	Threaded BSP		23108	28511	14909	07441	34544	24838	
			Smooth		20043		00598		34545		
			Threaded NPT		22356	30795	06595	07440		24839	30798
Configuration 4 	Both the filter inlet "Top" and the filter outlet "Bottom" from and to the MPV sides.	Without connection	Threaded BSP			28513	11368	08940			
			Smooth								
Configuration 5 	All inlets and outlets open.	Without connection	Threaded BSP			28514		Ask for code			28515
			Smooth								
	Top	Without connection	Threaded BSP								
			Smooth	32583	20565	33968	65216	22490	34546		
			Threaded NPT		22358			22492			

+ info
PDB Product Database
Further information on **PRODUCTS**
www.astralpool.com

MULTIPORT VALVES

New Generation
Manual multiport valves which incorporate a bayonet closing system (replacing bolts). This eases dismantling for maintenance and prevents rust.
The range includes the 1½" and 2" versions, including a "Top Eco" version available in 1½".



Selector valve with coupling to filter - New generation

	Code	Standard Pack	Standard Weight in kg	Standard Volume in m³
Configuration 3 - 1 ½"	**20569**	6	14.0	0.079
Configuration 3 - 2"	**28512**	6	26.4	0.165
Configuration 3 - 1 ½" NPT	**22355**	6	14.0	0.079
Configuration 3 - 2" NPT	**30788**	6	26.4	0.165



1½" and 2" multiport valve - New Generation

	Code	Standard Pack	Standard Weight in kg	Standard Volume in m³
Multiport valve 1½" - Configuration 3	**20043**	6	11.5	0.079
Multiport valve 2":				
Configuration 1	**28509**	6	22.3	0.165
Configuration 2	**28510**	6	22.3	0.165
Configuration 3	**28511**	6	22.3	0.165
Configuration 4	**28513**	6	22.3	0.165
Configuration 5	**28514**	6	22.3	0.165
Multiport valve 1½" NPT - Configuration 3	**22356**	6	11.5	0.079
Multiport valve 2" NPT - Configuration 3	**30795**	6	22.3	0.165



1½" and 2" multiport valve. Top Config. - New Generation

	Code	Standard Pack	Standard Weight in kg	Standard Volume in m³
Top 1½" Multiport valve	**20565**	6	12.10	0.079
Top 2" Multiport valve	**33968**	1	3.95	0.028
Top 1½" NPT Multiport valve	**22358**	6	12.10	0.079
Top 1½" Multiport valve (for Aster filter)	**31993**	6	11.8	0.124
Top 2" Multiport valve (for Aster filter)	**33969**	1	3.85	0.028



1½" multiport valve. Top ECO version - New Generation

6-way multiport valve for above ground pool filters where the pressure does not exceed 1.5 bar, of maximum diameter 380 mm. Bayonet closing system.

Code	Standard Pack	Standard Weight in kg	Standard Volume in m³
32583	6	8.83	0.082

MULTIPORT VALVES

Classic
Manual multiport valves with six channels to carry out different functions in an hydraulic circuit.
Its design, basically functional, offers a wide range of possibilities of connection to any installation, assuring perfect water-tightness and comfortable handling.



1½" and 2" multiport valve with filter connections - Classic

	Code	Standard Pack	Standard Weight in kg	Standard Volume in m³
1½" multiport valve - Configuration 3	**00599**	6	15.5	0.079
2" multiport valve - Configuration 3	**07444**	6	22.7	0.150
1½" NPT multiport valve - Configuration 3	**06673-0700**	6	15.5	0.079
2" NPT multiport valve- Configuration 3	**09848**	6	22.7	0.150



1½" and 2" multiport valve - Classic

	Code	Standard Pack	Standard Weight in kg	Standard Volume in m³
1½" multiport valve - Configuration 1	**00597**	6	12.2	0.079
1½" multiport valve - Configuration 3	**00598**	6	12.1	0.079
2" multiport valve - Configuration 3	**07441**	6	19.9	0.150
1½" NPT multiport valve - Configuration 3	**06595**	6	12.1	0.079
2" NPT multiport valve - Configuration 3	**07440**	6	19.9	0.150



65216 **22490**

2" TOP multiport valve- Classic

6-way TOP multiport valve for residential pools. Body, cover and handle injected in ABS.

	Code	Standard Pack	Standard Weight in kg	Standard Volume in m³
Top 1½" Multiport valve	**65216**	6	14.6	0.123
Top 2" Multiport valve	**22490**	1	3.45	0.028
2" TOP multiport valve NPT	**22492**	1	3.45	0.028

Flat
Multiport valve which features a special compact look thanks to its single-level design (compared to the normal twin-level set-up in other multiport valves). This reduced size makes the equipment especially suitable in installations where space is at a premium, such as in filter housing or monoblocks.



1½" lateral multiport valve with filter connections - Flat

	Code	Standard Pack	Standard Weight in kg	Standard Volume in m³
Configuration 3	**34543**	6	9.3	0.08



1½" lateral multiport valve - Flat

	Code	Standard Pack	Standard Weight in kg	Standard Volume in m³
Configuration 3 (bottom port threaded)	**34544**	6	9.3	0.08
Configuration 3 (bottom port solvent socket)	**34545**	6	9.3	0.08



1½" TOP multiport valve - Flat

Code	Standard Pack	Standard Weight in kg	Standard Volume in m³
34546	6	9.3	0.08

+ info
PDB Product Database
Further information on **PRODUCTS**
www.astralpool.com

MULTIPORT VALVES

Magnum
Specially designed to support high working pressures and connection to large filters which require special connections. Choose from the models offered: 2 ½", 3" and 4" multiport valves.



2½" multiport valve with filter connections - Magnum

Multiport valve wih filter connections.

	Code	Standard Pack	Standard Weight in kg	Standard Volume in m^3
2½" multiport valve - Configuration 3	**24837**	1	9.5	0.060
2½" NPT multiport valve - Configuration 3	**24840**	1	9.5	0.060



2½" multiport valve - Magnum

Filter inlet from the side and outlet from the bottom. With threaded outlets.

	Code	Standard Pack	Standard Weight in kg	Standard Volume in m^3
2½" multiport valve - Configuration 3	**24838**	1	8.2	0.061
2½" NPT multiport valve - Configuration 3	**24839**	1	8.2	0.061



3" multiport valve - Magnum

Side mounted multiport valve for connecting to filters. Body and cover injected in ABS with fiberglass. Handle injected in ABS. Sealing system by stainless steel screws. Supplied with two plugs so that the customer can adapt the valve to the most suitable configuration.

	Code	Standard Pack	Standard Weight in kg	Standard Volume in m^3
3" multiport valve	**28515**	1	9.8	0.064
3" NPT multiport valve	**30798**	1	9.8	0.064

MULTIPORT VALVES



Flat 1½" automatic multiport VRAC system valve

Basic automatic multiport valve model that stands out for its easy operation.
Voltage 230/115 volts. Controls filtration, backwashing, rinsing and emptying.

	Code	Standard Pack	Standard Weight in kg	Standard Volume in m³
TOP 1"½ mutliport valve with actuator	**43512**	1	4.1	0.02
SIDE 1"½ mutliport valve with actuator	**43513**	1	3.9	0.02



VRAC III automatic multiport valve

Improved automatic multiport valve operated via button keypad. It makes possible to control filtration, backwashing, rinsing, emptying, recirculation and closed positions.

NEW in 2021!
Better features to the automatic multiport valve replacing the pressure switch for an analog pressure sensor.

- **Easy program of the pressure set point for backwashing** - Pressing a button.
- **Avoid corrosion** - No metalic elements.
- **Friendly set up Fluidra Connect Box** - System VRAC Basic III
- **Adaptable:** For using in all devices with a media filter, and it is quick and easy to install.
- **Comfort:** With a simple programming using the keypad, you will receive a fully automated filtration for your pool.
- **Hygiene:** You will obtain an optimal water quality for swimming, optimizing the wash cycles (daily, weekly or by pressure monitoring).
- **Safety:** The automatic valve continuously monitors the filtration system and the valve, thus preventing potential breakdowns. New power surge protection. Spring coated to prevent rusting.

  LED lights for quick look of basic information.

Fluidra Connect compatible

A multiport safety valve (code 41898 or 41899) is recommended.

	Code	Standard Pack	Standard Weight in kg	Standard Volume in m³
Basic 1$^{1}/_{2}$" side mounted, Config. 3	**72433**	1	4.27	0.023
Basic 2" side mounted, Config. 3	**72434**	1	5.75	0.033

Substituted codes
72433 in substitution of 70768 and 57186
72434 in substitution of 70769 and 57187



Hydraulic safety valve

The 1 ½" hydraulic safety valve in the drain is specially designed for installation in the drain outlet of an automatic multiport valve on a pool sand filter.

Using it prevents water loss when the valve changes its working position or when the electricity flow fails and the valve remains in a position in which it could empty the pool.

It is recommended in installations with SYSTEM VRAC multiport valves.

	Code	Standard Pack	Standard Weight in kg	Standard Volume in m³
With 50 mm straight double connection	**41898**	2	1.8	0.02
With 1 ½" BSP double pipe connection	**41899**	2	1.8	0.02

+ info
PDB Product Database
Further information on **PRODUCTS**
www.astralpool.com

GAUGE PANEL UNIT



Gauge panel unit

Including air vents.

	Code	Standard Pack	Standard Weight in kg	Standard Volume in m^3
With pressure gauges 3 kg/cm^2	**00729**	1	1	0.007
With pressure gauges 6 kg/cm^2	**00730**	1	1	0.007

FILTRATION MEDIA AND ACCESSORIES



OC-1 filtration media

OC-1 filtration load: The future of pool filtration

OC refers to Open Cell and OC-1 is a mechanical filter that uses open-cell filtration technology to filter water with a high quality, increasing the water saving and energy potential. The filtration media is an extruded plastic compound comprising a base of High Density Polyethylene with Calcium Carbonate.

- Saves water: exclusive filtration method that reduces water consumption by more than 40%.
- Saves power: lets you use a smaller pump or lower the power to get the same flow you would with traditional filtration media.
- Saves time: OC-1 reduces backwash frequency to less than a third of traditional methods, meaning more leisure time for you.
- The OC-1 media has been tested in accordance with current European standard EN16713-1.

	Code	Standard Pack	Standard Weight in kg	Standard Volume in m^3
OC-1 50L filtration media bag	**69752**	1	9.0	0.05
OC-1 20L filtration media bag	**69753**	1	3.6	0.02



Active Clear Glass

AstralPool sells Active Clear Glass filtration material.

Active Clear Glass has the following benefits:

- More efficient and ecological filtration with water and energy savings.
- Higher filtration capacity with a cleaner bed that traps bacteria.

Granulometry	Code	Standard Pack	Standard Weight in kg	Standard Volume in m^3
0.5 mm - 1.0 mm	**57011**	1	25.0	0.667
1.0 mm - 3.0 mm	**57012**	1	25.0	0.667
3.0 mm - 7.0 mm	**57013**	1	25.0	0.667

			% Volume of the filter bed	
	Code	**Range**	**Filters D < 900 mm**	**Filters D > 900 mm**
Range 1	**57011**	0.5 - 1.0 mm	0.8	0.6
Range 2	**57012**	1.0 - 3.0 mm	0	0.2
Range 3	**57013**	3,0 - 7,0 mm	0.2	0.2

FILTRATION MEDIA & ACCESSORIES



Silex

Other silex grades available to order.
25 Kg bag.

	Code	Standard Pack	Standard Weight in kg	Standard Volume in m³
Granulometry 0.4 - 0.8 mm	**00596**	1	25	0.667

Gravel

Please ask for a quotation for other grades.
25 Kg bag.

	Code	Standard Pack	Standard Weight in kg	Standard Volume in m³
Granulometry 1 - 2 mm	**10697**	1	25	0.667
Granulometry 3 - 5 mm	**11346**	1	25	0.667

Anthracite

Please ask for a quotation for other grades.
25 Kg bag.

	Code	Standard Pack	Standard Weight in kg	Standard Volume in m³
Granulometry 0.8 - 1.6 mm	**03696**	1	25	0.8



Zeolite

Natural porous material that has higher filtration qualities than the normal substrate. It can be compared to to that of diatoms, at a much more competitive price and longer duration.

	Code	Standard Pack	Standard Weight in kg	Standard Volume in m³
Zeolite standard 0.5 - 1 mm	**25845**	1	25	-
Zeolite standard 1-2 mm	**25846**	1	30	0.023
Zeolite standard 2-5 mm	**25847**	1	30	0.023



Diatomaceous earth

	Code	Standard Packaging	Standard Weight kg	Standard Volume m³
Celatom FW-60. 20 Kgs bag	**03247**	1	20	0.60
Celite 545. 23 Kgs bag	**03246**	1	23	0.60





PUMPS

170 • Pump features and selection
173 • Variable speed pumps
174 • Self-priming pumps
179 • Control boxes
182 • Countercurrent swimming equipment – Selection guide
183 • Countercurrent swimming equipment
189 • Blower pumps

PUMP SELECTION GUIDE

HOW DO YOU SELECT THE PUMP THAT YOU NEED?

The selection of the pump is essential for running a pool's water treatment system.

The pump is the heart of a water facility and provides the power that makes the water circulate.

Its main use is to filter the water so that it is clear and to ensure its full recirculation. The main steps for selecting a pump are:

- **→ Setting the flow rate required depending on the pool's volume and dirt load. The flow rate must always be suitable for the filter fitted. It is very important that it neither be too slow nor too fast.**
- **→ Setting the pressure required depending the hydraulic facility's features.**
- **→ Taking into account any other units that may have been installed, such as salt chlorinators and heat pumps, whenever they involve constraints on the flow rate or pressure. For example, if a minimum flow rate is required for a unit to run.**
- **→ Selecting the pump ranges that supply this flow rate and pressure.**
- **→ Choosing the pump with the features that are best suited to a pool's requirements and those of its owner.**

Pumps also have other uses, such as running water features and massage jets. In such cases, read the specifications for each use and select the right pump.

Variable speed technology delivers the highest levels of comfort and features. It is without a doubt the best choice for the most exacting users.

PUMP RANGES AND MAIN ADVANTAGES

To select the right pump, you can use the following table that shows the features according to pool size.

FEATURES	
COMFORT VARIABLE SPEED	1. Extra silent 2. Power savings. Low power consumption 3. High quality filtration 4. Connected and connectable 5. Low maintenance: large capacity prefilter
COMFORT SINGLE SPEED	1. Low and easy maintenance: large capacity prefilter 2. High efficiency 3. Wide range of flow rates suitable for practically any type of residential pool 4. High hydraulic performance
COMPACT SINGLE SPEED	1. Small footprint: compact prefilter 2. Intermediate hydraulic performance 3. For small- and medium-sized pools

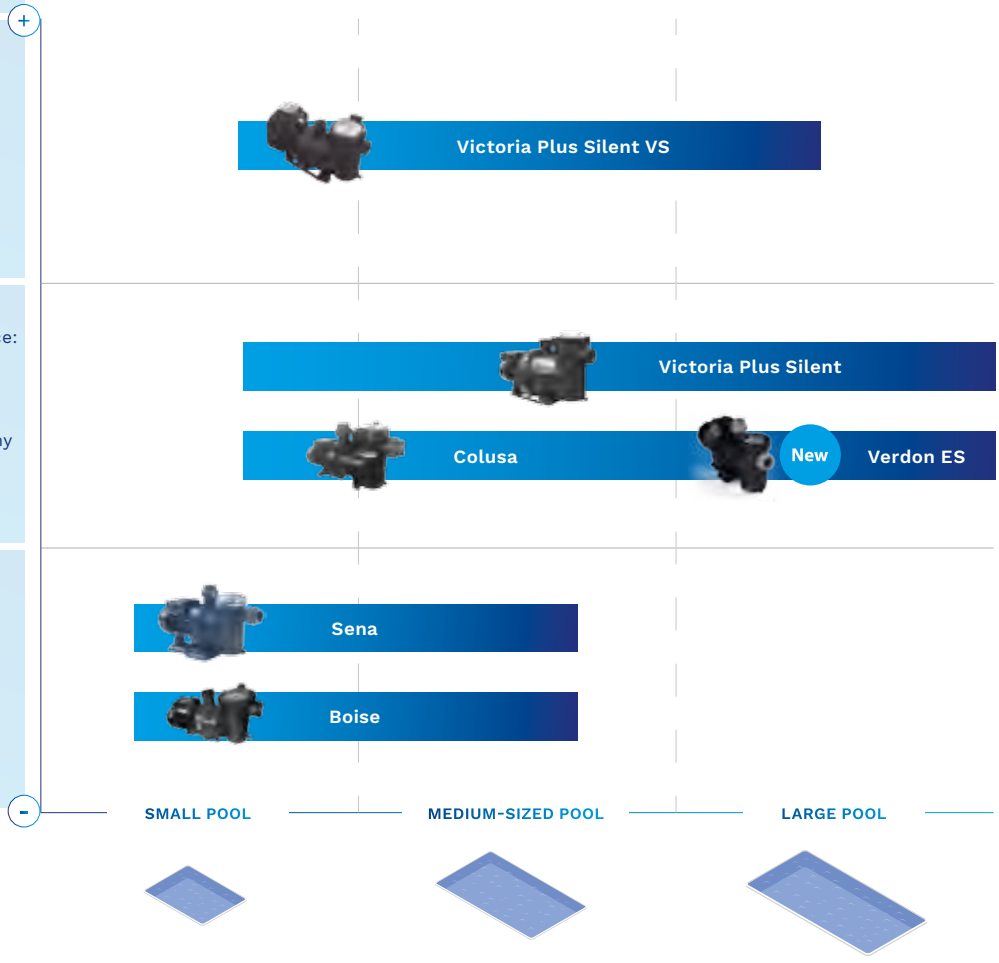

PUMP FEATURES AND SELECTION

	VARIABLE SPEED COMFORT	SINGLE SPEED COMFORT			SINGLE SPEED COMPACT	
				 New		
	VICTORIA PLUS SILENT VS	**VICTORIA PLUS SILENT**	**COLUSA**	**VERDON ES**	**SENA**	**BOISE**
Power range P2 (HP)	1.0 - 2.0	0.5 - 3.0	0.5 - 3.0	0.5 - 3.0	0.33 - 1.25	0.33 - 1.25
Flow rate range (m³/h)	17.0 - 26.0	8.0 - 33.0	7.0 - 32.0	7.0 - 31.0	3.5 - 16.3	6.0 - 19.0
Power supply	1~	1~ and 3~ for all powers	1~ from 0.5 to 0.75 HP 1~ & 3~ from 1 to 3 HP	1~ from 0.5 to 0.75 HP 1~ & 3~ from 1 to 3 HP	1~ from 0.33 to 0.5 HP 1~ & 3~ from 0.75 to 1.25 HP	1~
Hydraulic fittings	D50 to D63 or 2"	D50 to D75 or 2"	D50 to D63	D50 to D75	D50	D50
Couplings included	Yes D50-D63 acc. to power	Yes D50-D75 acc. to power	Yes D50-D63 acc. to power	Yes D50-D75 acc. to power	Yes D50	Yes D50
Full backward compatibility	Victoria Plus	Victoria Plus	--	ESPA Silen S2	IML America	--
Prefilter size (l)	3	3	2.4	3	0.9	1.1
Efficiency	★★★★★	★★★★★	★★★★★	★★★★★	★★★★★	★★★★★
Noise (dBA)	62 - 47	61	63	64	62	63
Possible controls	Standalone Dry contacts Fluidra Connect remote control Automated system	On/Off	On/Off	On/Off	On/Off	On/Off
Program settings	Hourly 3 speeds	--	--	--	--	--
User interface	LCD display Removable interface	--	--	--	--	--
Automation compatible	Yes - Fluidra Connect	--	--	--	--	--
Warranty	GARANTÍA 3 AÑOS YEARS GUARANTEE	GARANTÍA 3 AÑOS YEARS GUARANTEE				

→ Table of self-priming filtration pumps for residential pools.
→ For details on backward compatibility in multi-compatibility ranges, see the product's technical specifications, catalogue or website.
→ Total efficiency (hydraulic power/electric power consumed). Comparison based on internal tests on the ranges shown in this table.
→ Noise. Based on internal tests. A 1 HP model for ranges with multiple powers.
→ Flow rates at 10 m.c.w. for Comfort ranges and at 8 m.c.w. for Compact ranges.

VICTORIA PLUS SILENT VS

Shhhhh... Relax and enjoy the silence of your pool

A NEW GENERATION OF FILTRATION PUMPS



Silent
At just 45 dB, it is amongst the most silent pumps in the market

Savings
A variable speed pump that could see you save as 900€ in power consumption

Fluidra Connect connectivity
Download the app and program it from your mobile phone or tablet

User-friendly display
Easy to use and program with the added bonus that it can be installed on a wall

Easy to replace
Compatible with all earlier Victoria models by AstralPool

Reliability
Cutting-edge engineering tested for a long, problem-free service life



ASTRALPOOL

+ info
Further information on **PRODUCTS**
www.astralpool.com

VARIABLE SPEED PUMPS

VICTORIAPLUS
SILENT VS

Victoria Plus Silent VS pump







COMPATIBLE NN thing
Fluidra Connect compatible

The Victoria Plus Silent pump for residential pools comes with a 1 hp or 2 hp motor, has variable speeds and can be automatically controlled.
This pump has been designed for both new-build pools and as a replacement for pumps already fitted.
Significant power savings can be made thanks to the use of variable speeds and the timer.
The pump is compatible with the Fluidra Connect platform.
It has a built-in HMI controller with the possibility of mounting it on a wall for better usability.
Bathers experience a greater feeling of well-being due to the reduced noise level.
There are digital inputs and outputs for the smooth running of all pool units, such as the salt chlorinator and heat pump. It includes a power factor correction function for reducing current flow. It does not require an external power pack for Fluidra Connect..

	Code	Standard Pack	Standard Weight in kg	Standard Volume in m^3
Victoria Plus Silent VS pump - 1 hp	**67547**	1	19	0.087
Victoria Plus Silent VS pump - 2 hp	**67548**	1	22	0.087

67547

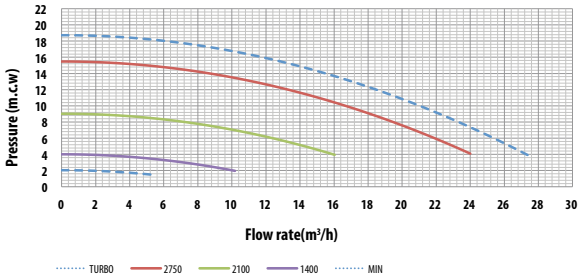

67548

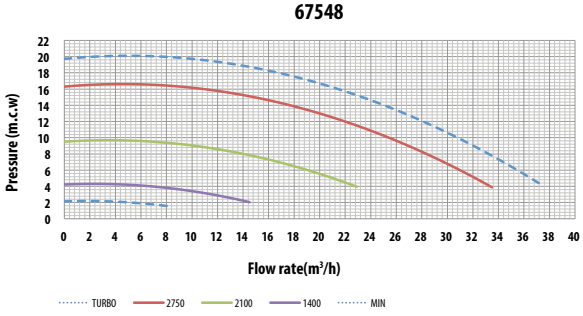



Menu-driven adjustments and settings



Intuitive weekly timer settings



Pre-set and adjustable speeds



Power consumption and savings display

Technical features:

	67547			67548		
	LOW	MEDIUM	HIGH	LOW	MEDIUM	HIGH
Speed (rpm)	1400	2100	2750	1400	2100	2750
Voltage (V)	220-240	220-240	220-240	220-240	220-240	220-240
Frequency (Hz)	50/60	50/60	50/60	50/60	50/60	50/60
Power (W)	170	470	1030	258	750	1560
Current (A)	1	2.2	4.5	1.4	3.4	7.1
Flow rate (m^3/h)	8.2	12.4	16.7	11.1	18.8	25.5
Pressure (m)	2.7	6.1	10	3.2	6.2	10
Efficiency (I/Wh)	48.3	26.4	16.2	43	25	16.3
Max. working pressure (m)	4	9	15.5	4	9.4	16.3
Noise (dB)	45	53	61	51	58	66

Installation and control:


HMI control system on pump


HMI control system on wall

VICTORIA PLUS SILENT



A great generation of filtration pumps

SELF-PRIMING PUMPS

VICTORIAPLUS SILENT



Victoria Plus Silent pump

A self-priming pump with single-phase and three-phase motors of 1/2 to 3 hp. A prefilter is mounted on the body of the pump to prevent foreign bodies from entering it that may damage its hydraulic parts. The motors supplied come with an IP-55 protection rating and have been prepared to withstand hot environments and high levels of humidity. GS marking. The main characteristics of Victoria Plus Silent are:

- Low noise level: between 61 dB and 70 dB.
- Easy to use: Prefilter cap with 2 levers included (no spanner needed).
- Compatibility: Fully compatible in pools fitted with a Victoria Plus pump.

Larger front bearing for improved axial thrust.

PVC accessories assembly included in pump.

Flow rates in l/h at 8 mcw for 0.5 hp and 10 mcw for the rest of range.

See performance curves on page 178

	Code	Standard Pack	Standard Weight in kg	Standard Volume in m^3
11,000 l/h 0.43 kW (½ HP) 230 V II	**65557**	1	12	0.07
11,000 l/h 0.43 kW (½ HP) 230/400 V III	**65558**	1	12	0.07
11,000 l/h 0.61 kW (¾ HP) 230 V II	**65560**	1	13	0.07
11,000 l/h 0.60 kW (¾ HP) 230/400 V III	**65561**	1	13	0.07
16,000 l/h 0.78 kW (1 HP) 230 V II	**65562**	1	14	0.07
16,000 l/h 0.76 kW (1 HP) 230/400 V III	**65563**	1	14	0.07
22,500 l/h 1.10 kW (1.5 HP) 230 V II	**65564**	1	14	0.07
22,500 l/h 1.10 kW (1.5 HP) 230/400 V III	**65565**	1	14	0.07
26,500 l/h 1.46 kW (2 HP) 230 V II	**65566**	1	17	0.07
26,500 l/h 1.46 kW (2 HP) 230/400 V III	**65567**	1	17	0.07
34,000 l/h 2.20 kW (3 HP) 230 V II	**65569**	1	18	0.07
34,000 l/h 2.20 kW (3 HP) 230/400 V III	**65570**	1	18	0.07

VERDON ES

THE RELIABLE PUMP THAT MAKES IT EASY FOR YOU

AstralPool's new Verdon ES pumps are characterized by their reliable and robust performance. Their simple build using premium quality materials and advanced technology enable to install a unique single-speed pump that can be fitted in most existing residential pools. A pump at best value for money as well as premium quality.



- Wide range that adapts to most existing residential pools.
- Compatible with pumps already installed: ESPA Silen S2.
- Couplings included.
- Compatible with the most commonly used chemical treatments, including electrolysis.

PROFESSIONAL ADVANTAGES

High performing and reliable, with exceptional value for money

Service. No need to schedule orders. Product and spare parts availability

Exclusivity: sales to professionals only

USERS ADVANTAGES

Peace of mind. Quality and reliability

Easy to use and simple maintenance

Exceptional value for money

ASTRALPOOL

See performance curves on page 178

SELF-PRIMING PUMPS



Verdon ES pump

New

Verdon ES is a wide range of self-priming pumps. Single phase motors from 1/2 hp to 3/4 hp and both single and three-phase motors from 1 hp to 3 hp.

Designed and produced to serve professional performance, to be reliable and with an exceptional value for money.

Ease of use and maintenance thanks to its large prefilter.

PVC accessories included in the pump.

Flow rate in l/h at 8 mcw for 0.5 hp and 10 mcw for the rest of range.

	Code	Standard Pack	Standard Weight in kg	Standard Volume in m^3
9,500 l/h 0,43 kW (½ HP) 230 V II	**73676**	1	12	0.07
10,500 l/h 0,60 kW (¾ HP) 230 V II	**73678**	1	13	0.07
15,500 l/h 0,76 kW (1 HP) 230 V II	**73680**	1	14	0.07
15,500 l/h 0,76 kW (1 HP) 230/400 V III	**73681**	1	14	0.07
20,500 l/h 1,10 kW (1.5 HP) 230 V II	**73682**	1	14	0.07
20,500 l/h 1,10 kW (1.5 HP) 230/400 V III	**73683**	1	14	0.07
25,000 l/h 1,46 kW (2 HP) 230 V II	**73684**	1	17	0.07
25,000 l/h 1,46 kW (2 HP) 230/400 V III	**73685**	1	17	0.07
31,000 l/h 2,20 kW (3 HP) 230 V II	**73686**	1	18	0.07
31,000 l/h 2,20 kW (3 HP) 230/400 V III	**73687**	1	18	0.07

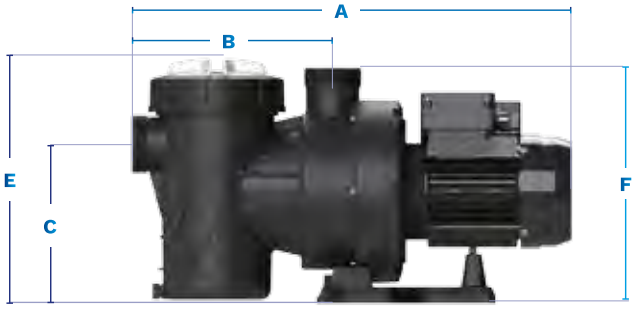

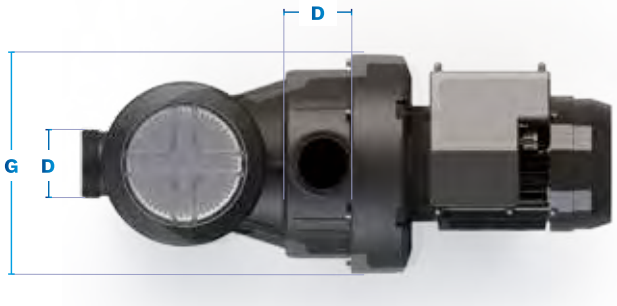

Code	Model	Voltage (V)	A	B	C	D	E	F	G
			(mm)						
73676	050M	230	581	280	220	2"¾	348	326	254
73678	075M	230	581	280	220	2"¾	348	326	254
73680	100M	230	581	280	220	2"¾	348	326	254
73681	100T	230 - 400	581	280	220	2"¾	348	326	254
73682	150M	230	615	280	220	2"¾	348	326	254
73683	150T	230 - 400	615	280	220	2"¾	348	326	254
73684	200M	230	615	280	220	2"¾	348	326	254
73685	200T	230 - 400	615	280	220	2"¾	348	326	254
73686	300M	230	646	280	220	2"¾	348	326	254
73687	300T	230 - 400	615	280	220	2"¾	348	326	254

Code	Power P2 (HP)	Voltage (V)	Max. H (m H_2O)	Flow rate (m^3/h)	Noise (dBA)	Couplings	Weight (Kg)	Volume (m^3)
73676	½	230	13.5	7	64	D.50	12	0.07
73678	¾	230	14	10.5	64	D.50	13	0.07
73680	1	230	16	15.5	64	D.50	14	0.07
73681	1	230/400	16	15.5	64	D.50	14	0.07
73682	1.5	230	16	20.5	66	D.63	14	0.07
73683	1.5	230/400	16	20.5	66	D.63	14	0.07
73684	2	230	17	25	66	D.63	17	0.07
73685	2	230/400	17	25	66	D.63	17	0.07
73686	3	230	18	31	70	D.75	18	0.07
73687	3	230/400	18	31	70	D.75	18	0.07

See performance curves on next page.

SELF-PRIMING PUMPS



Sena pump

A compact self-priming pump with single-phase from 1/3 hp up to 1.25 hp in and three-phase motors from ¾ hp to 1.25 hp. GS marking. IP-55 protection rating, Class F insulation and AISI-316 stainless steel for all components in direct contact with water. Glue-in pipe connection sleeve 50 mm in diameter.

Flow rates in l/h at 6 mwc for 0.33 hp, 8 mwc for 1/2 hp and 10 mwc for the rest of range. 3,000 rpm.

	Code	Standard Pack	Standard Weight in kg	Standard Volume in m^3
7,000 l/h, 1/3 HP, 230 V II	**25461**	1	10.20	0.055
7,800 l/h, ½ HP, 230 V II	**25462**	1	10.20	0.055
9,000 l/h, ¾ HP, 230 V II	**25463**	1	11.65	0.055
9,000 l/h, ¾ HP, 230/400 V III	**25464**	1	11.40	0.055
11,800 l/h, 1 HP, 230 V II	**25465**	1	12.75	0.055
11,800 l/h, 1 HP, 230/400 V III	**25466**	1	13.00	0.055
14,000 l/h, 1.25 HP, 230 V II	**25467**	1	13.75	0.055
14,000 l/h, 1.25 HP, 230/400 V III	**25468**	1	13.55	0.055



Colusa pump

The Colusa pump delivers highly efficient hydraulic performance. It has been designed to be silent, long-lasting and reliable.

The pumps are self-priming from ½ hp to 3 hp and are supplied with 3,000 rpm single-phase and three-phase motors. Silent, the hydraulic design has an extremely low noise level. A prefilter is mounted on the body of the pump to prevent foreign bodies from entering it that may damage its hydraulic parts. This prefilter has a wing nut and a transparent cover that makes maintenance work easier.

Flow rates in l/h at 8 mwc for 1/ 2 hp, 10 mwc for 1 and 1.5 hp, 12 mwc for 2 hp and 14 mwc for 3 hp.

	Code	Standard Pack	Standard Weight in kg	Standard Volume in m^3
10,000 l/h 0.4 kW (½ HP) 230 V II	**70574**	1	13.6	0.079
13,000 l/h 0.5 kW (¾ HP) 230 V II	**70575**	1	14.3	0.079
16,000 l/h 0.7 kW (1 HP) 230 V II	**70576**	1	15.3	0.079
16,000 l/h 0.7 kW (1 HP) 230/400 V III	**70577**	1	14.3	0.079
21,000 l/h 1.1 kW (1.5 HP) 230 V II	**70578**	1	18.8	0.079
21,000 l/h 1.1 kW (1.5 HP) 230/400 V III	**70579**	1	18.1	0.079
23,000 l/h 1.5 kW (2 HP) 230 V II	**70580**	1	19.6	0.079
23,000 l/h 1.5 kW (2 HP) 230/400 V III	**70581**	1	19.8	0.079
27,000 l/h 2.2 kW (3 HP) 230 V II	**70582**	1	23.8	0.079
27,000 l/h 2.2 kW (3 HP) 230/400 V III	**70583**	1	21.3	0.079



Boise pump

The Boise pump is designed to work under a vast range of conditions. Whatever the pool type, it always delivers the required flow rate and pressure.

The Boise pump is built for ease of handling. It has a see-through lid for easy inspection and a large strainer to extend time between cleanings.

The motor materials are rustproof; the motor shaft is made from stainless steel and the sealed bearings never need lubrication. The thermoplastic housing withstands extreme heat and corrosion.

Flow rates in l/h at 6 mwc for 0.33 HP, 8 mwc for 0.5 HP, 10mwc for 0.75 HP and 12 mwc for rest of range.

	Code	Standard Pack	Standard Weight in kg	Standard Volume in m^3
8,500 l/h 0.23 kW (1/3 HP) 230 V II	**71671**	1	8.8	0.039
10,500 l/h 0.38 kW (½ HP) 230 V II	**71672**	1	9.0	0.039
10,300 l/h 0.52 kW (¾ HP) 230 V II	**71673**	1	9.5	0.039
10,500 l/h 0.71 kW (1 HP) 230 V II	**71674**	1	10.8	0.039
13,900 l/h 0.82 kW (1,25 HP) 230 V II	**71675**	1	11.8	0.039

Other options available such as 230 HP and 60 Hz motors and Thai/Australian/British connections

SELF-PRIMING PUMPS

Self-priming pump performance curves

Victoria Plus Silent pump



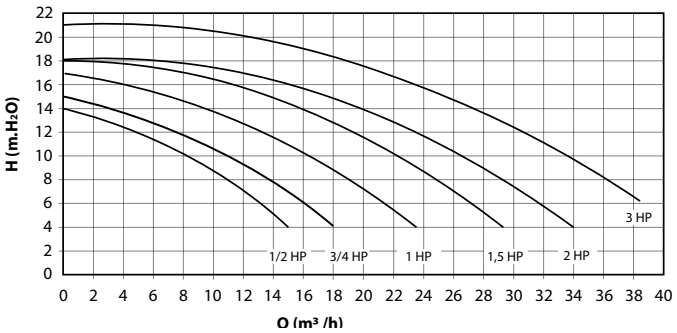

Verdon ES pump

New



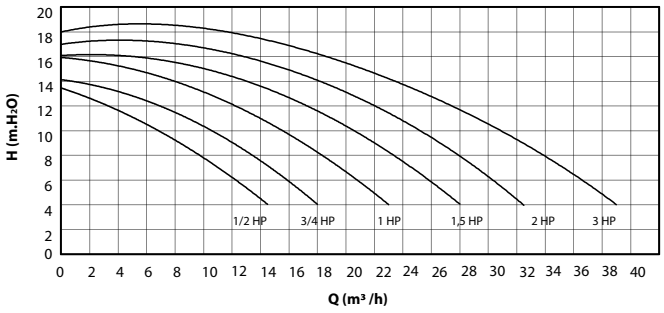

Sena pump



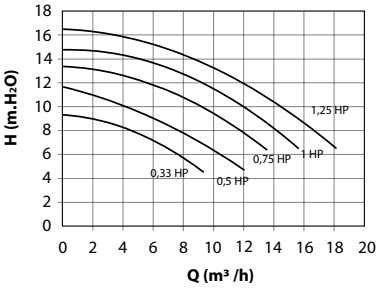

Colusa pump



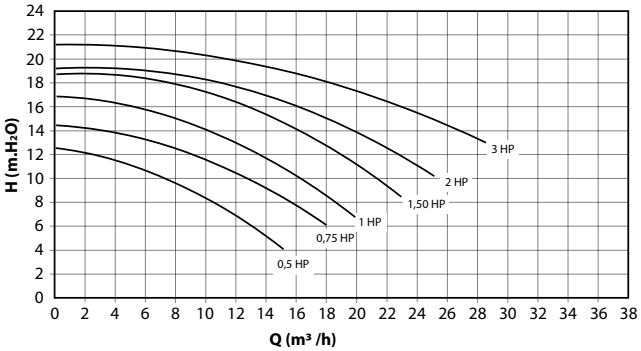

Boise pump



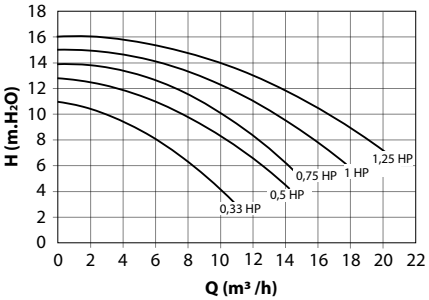

+ info PDB Product Database
Further information on **PRODUCTS**
www.astralpool.com

CONTROL BOXES



Control boxes

IP-65 protection. Glass panel with lock and key. All units are compatible with:
- 220/240V 1-phase (P+N+T) 50Hz/60Hz
- 380/415V 3-phase (3P+N+T) 50Hz/60Hz
- 220/230V 3-phase (3P+T) 50Hz/60Hz

24h programming clock with hourly programming. Connection for remote control of pump (on/off,...) and for auxiliary equipment (cold detector, level control...).

All products supplied with:
- Electrical diagram
- Connection diagram
- Instructions for installation
- CE conformity certificate
- Stuffing box at every cable entrance
- Screws and plugs (4) for fixing to wall

The control box model should be selected according to the nominal voltage of the pump:

Type	Intensity range	Power Range 1-phase 230V	Power Range 3-phases 400V	Power Range 3-phases 230V
A	1.6A - 2.5A	1/4 HP	¾ HP - 1 HP	½ HP
B	2.5A - 4A	½ HP	1.5 HP - 2 HP	¾ HP - 1 HP
C	4A - 6.3A	¾ HP - 1 HP	3 HP*	1.5 HP
D	6A - 10A	1.5 HP	4 HP**	2 HP - 3 HP

* Also 3.5 hp 400V 3~ in plastic (code 08003)
** Also 4.5 and 5.5 hp 400 V 3~ in plastic (codes 08004, 08005)



Control box for pump overload protection

Thermal overload protection (1.6 to 10A), contactor, 24 hr programming clock, modular switch with 3 positions, Auto / 0 / Manual.

	Code	Standard Pack	Standard Weight in kg	Standard Volume in m^3
Type A	**25717**	1	1.5	-
Type B	**25718**	1	1.5	-
Type C	**25719**	1	1.5	-
Type D	**25720**	1	1.5	-



Control box for pump overload protection and underwater light

Thermal overload protection (1.6 to 10A), contactor, 24 hr programming clock, modular switch with 3 positions: Auto / 0 / Manual.

	Code	Standard Pack	Standard Weight in kg	Standard Volume in m^3
Type A	**25721**	1	1.6	-
Type B	**25722**	1	1.6	-
Type C	**25723**	1	1.6	-
Type D	**25724**	1	1.6	-

+ info PDB
Further information on **PRODUCTS**
www.astralpool.com

CONTROL BOXES



Control box for pumps overload protection and underwater light with differential protection

Thermal overload protection (1.6 to 10A), contactor, 24 hr programming clock.
Three positions: Auto/0/manual. Protected 230 V 10 A output and controlled for underwater projectors. Single-phase.

	Code	Standard Pack	Standard Weight in kg	Standard Volume in m^3
Type A	**25725**	1	1.9	-
Type B	**25726**	1	1.9	-
Type C	**25727**	1	1.9	-
Type D	**25728**	1	1.9	-



Control box for pump overload protection and underwater light with differential protection

Thermal overload protection (1.6 to 10A), contactor, 24 hr programming clock.
Three positions: Auto/0/manual. Protected 230 V 10 A output and controlled for lights. Three phases. Three-phase.

	Code	Standard Pack	Standard Weight in kg	Standard Volume in m^3
Type A	**25729**	1	1.9	-
Type B	**25730**	1	1.9	-
Type C	**25731**	1	1.9	-
Type D	**25732**	1	1.9	-



Control box for pump overload protection and 1 underwater light

Control box for pump overload protection and 1 underwater light.
Thermal overload protection (1.6 to 10A), contactor, 24 hr programming clock.
Three positions: Auto/0/manual. 12 V 315. Protected output for 1 underwater light.

	Code	Standard Pack	Standard Weight in kg	Standard Volume in m^3
Type A	**69916**	1	6	-
Type B	**69917**	1	6	-
Type C	**69918**	1	6	-
Type D	**69919**	1	6	-



Control box for pump overload protection and 2 underwater lights

Thermal overload protection (1.6 to 10A), contactor, 24 hr programming clock.
Three positions: Auto/0/manual. 12 V 630. Protected output for 2 underwater lights.

	Code	Standard Pack	Standard Weight in kg	Standard Volume in m^3
Type A	**69920**	1	8	-
Type B	**69921**	1	8	-
Type C	**69922**	1	8	-
Type D	**69923**	1	8	-

CONTROL BOXES



Control box with overload protection for 2 pumps and control for 1 underwater light

Circuit breaker protection (2 pumps of 1.6 at 10 A), contactor and 24 h timer. Three positions: Auto/0/manual. Protected 230 V 10 A output for lights. Protected 12 V 315 VA output for 1 underwater light.

	Code	Standard Pack	Standard Weight in kg	Standard Volume in m^3
Type C + Type D	**70429**	1	7.5	-
Type D + Type D	**70422**	1	7.5	-



Control box with protection for 2 pumps and control for 2 underwater lights

Thermal overload protection (1srt pump: 4 poles, 10 A max. / 2nd pump: 2 poles, 10 A max.), contactor, 24 hr. programming clock, modular switch "Auto / 0 / Manual". Transformer 230/12 V -600VA for 2 underwater light of 300W.

	Code	Standard Pack	Standard Weight in kg	Standard Volume in m^3
Type C + Type D	**70423**	1	9.5	-
Type D + Type D	**70424**	1	9.5	-



Control box with protection for 1 pump and control for 3 underwater lights

Thermal overload protection (4 poles, 10 A max.), contactor, 24 hr. programming clock, modular switch "Auto / 0 / Manual". Transformer 230/12 V -600VA + 300VA for 3 underwater light of 300W.

	Code	Standard Pack	Standard Weight in kg	Standard Volume in m^3
Type A	**70425**	1	9.5	-
Type B	**70426**	1	9.5	-
Type C	**70427**	1	9.5	-
Type D	**70428**	1	9.5	-



Encapsulated security transformer IP-65 for pool

Manufactured according to the rules UNE-EN 61558 and directive CE.
- IP-657 housing protection degree.
- Transformer Class II. total protection against electric shock.
- Self-extinguishing housing IEC 695-2-1.
- Frequency 50/60 Hz.

	Code	Standard Pack	Standard Weight in kg	Standard Volume in m^3
130 VA from 220-240V to 12 V	**35807**	1	3.2	0.02
400 VA to 220-240V to 12-17 V	**35385**	1	6.8	0.04
800 VA from 220-240V to 12-17 V	**35386**	1	10.4	0.04

COUNTERCURRENT SWIMMING EQUIPMENT – SELECTION GUIDE

EQUIPMENT WITH STAINLESS STEEL HOUSING	EQUIPMENT WITH PLASTIC HOUSING	TWIN EQUIPMENT

GRAB RAILS | **GRAB RAILS**



S.S. hand grip 65535	Rectang. Polished S.S. 00246	Rectang. Painted S.S. 09447	Round Painted S.S. 07536	Demi-circular Polished S.S. 37214	S.S. hand grip 65535	Rectang. Polished S.S. 00246	Rectang. Painted S.S. 09447	Round Painted S.S. 07536	Demi-circular Polished S.S. 37214	Polished S.S. 05557
NOZZLE SET	NOZZLE SET				NOZZLE SET	NOZZLE SET		NOZZLE SET	NOZZLE SET	



Basic NL	Rectang. Plastic white	Round Plastic white	Basic NL	Rectang. Plastic white	Round Plastic white	With hand grips built-in white plastic	Rectangular plastic white
65489	11501	11500	65489	11015	11016	11013	11508

HOUSING | **HOUSING** | **HOUSING**

For concrete pool	For prefabricated pool	For concrete pool	For prefabricated pool	For concrete pool	For prefabricated pool



Housing in S.S. 00243	Housing in S.S. 00243 + Accessories 00248	Housing in plastic 11502	Housing 11502 + Accessories 11503	Housing in S.S. 05555	Housing in S.S. 05555 + Accessories 05558

PUMPS | **PUMPS**



230 V II 1.5 Kw (2 HP)	11505	230 V II 1.5 Kw (2 HP)	28566	230/400 V III 3.3 Kw (4.5 HP)	11509	230/400 V III 3.3 Kw (4.5 HP)	11509
230 V II 2.2 Kw (3 HP)	25415	230 V II 2.2 Kw (3 HP)	28568	230/400 V III 4 Kw (5.5 HP)	65549	230/400 V III 4 Kw (5.5 HP)	65549
230/400 V III 2.60 Kw (3.5 HP)	11504	230/400 V III 2.2 Kw (3 HP)	30774				

CONTROL BOXES | **CONTROL BOXES**



230 V II 1.5 Kw (2 HP)	11507	400 V III 3.3 Kw (4.5 HP)	11510
230 V II 2.2 Kw (3 HP)	25456	400 V III 4 Kw (5.5 HP)	65536
400 V III 2.2 Kw (3 HP)	32151		
230/400 V III 2.6 Kw (3.5 HP)	11506		
400 V III 3,3 Kw (4.5 HP)	11510		
400 V III 4 Kw (5.5 HP)	65536		

+ info

PDB Product Database

Further information on **PRODUCTS**
www.astralpool.com

COUNTERCURRENT SWIMMING EQUIPMENT



Basic NL countercurrent nozzle set

Countercurrent nozzle set in polished AISI-316L stainless steel front cover, interchangeable with nozzle sets 11499 and 11014, multi-directional water-air return nozzle, and suction capacity 60 m³/h, and on-off push button. Optional hand grip (code 65535).

	Code	Standard Pack	Standard Weight in kg	Standard Volume in m³
Basic NL nozzle set. for both stainless steel and plastic housing.	**65489**	1	-	-



Basic ND countercurrent kit

Countercurrent kit made up of:
- Return inlet (air-water) made of AISI-316 stainless steel.
- Illuminated ON-OFF piezoelectric push button made of AISI-316 stainless steel.
- Suction grille with a capacity of 60 m³/h made of polished AISI-316 stainless steel.
- 5.5 HP pump.
- Flow rate of 60 m³/h.
- Power control cabinet.

	Code	Standard Pack	Standard Weight in kg	Standard Volume in m³
Basic ND unit for concrete pools	**65498**	1	-	-
Basic ND unit for liner pools	**66044**	1	-	-



Advance ND countercurrent kit

Countercurrent kit made up of:
- Return inlet (air-water) made of polished AISI-316 stainless steel.
- Illuminated ON-OFF and +/- piezoelectric push button made of AISI-316 stainless steel.
- Suction grille with a capacity of 60 m³/h made of polished AISI-316 stainless steel.
- 5.5 HP pump.
- Flow rate adjustable from 23 m³/h to 60 m³/h thanks to a variable-speed drive.
- Power control cabinet.

	Code	Standard Pack	Standard Weight in kg	Standard Volume in m³
Advance ND unit for concrete pools	**65497**	1	-	-
Advance ND unit for liner pools	**66043**	1	-	-



Nozzle assemblies with round front plate in white plastic

Made up of: Front plate, nozzle assembly, on-off and air regulation remote control.
Components in AISI-316 stainless steel.

	Code	Standard Pack	Standard Weight in kg	Standard Volume in m³
For stainless steel housing	**11500**	1	5.0	0.045
For plastic housing	**11016**	1	4.4	0.056



Nozzle assemblies with rectangular front plate in white plastic

Made up of: Front plate, nozzle assembly, on-off and air regulation remote control.
Components in AISI-316 stainless steel.

	Code	Standard Pack	Standard Weight in kg	Standard Volume in m³
For stainless steel housing	**11501**	1	5.0	0.045
For plastic housing	**11015**	1	3.9	0.039

For all products on this page

Complies with Standard **EN 13451-1-3**

Complies with Standards **EN 16582-1** **EN 16713-2**

+ info PDB Product Data Base
Further information on **PRODUCTS**
www.astralpool.com

COUNTERCURRENT SWIMMING EQUIPMENT



Nozzle assemblies with rectangular front plate in white plastic and built-in hand grip

Made up of: Front plate, nozzle assembly, on-off and air regulation remote control.

	Code	Standard Pack	Standard Weight in kg	Standard Volume in m^3
For plastic housing	**11013**	1	4.2	0.039



Front suction countercurrent unit hand grip

Handrail made of AISI-316 stainless steel for assembly with Basic NL nozzle set (code 65489).

Code	Standard Pack	Standard Weight in kg	Standard Volume in m^3
65535	1	-	-



Rectangular hand grips in painted AISI-316L Stainless Steel

Specially designed for 11015 & 11501 nozzles. Nevertheless can be mounted on any of the other nozzle sets except for the 11013.

Code	Standard Pack	Standard Weight in kg	Standard Volume in m^3
09447	1	1.4	0.013



Rectangular hand grips in polished AISI-316L Stainless Steel

Specially designed for 11015 and 11501 nozzles. Nevertheless can be mounted on any of the other nozzle sets except for the 11013.

Code	Standard Pack	Standard Weight in kg	Standard Volume in m^3
00246	1	1.48	0.01



Round Hand grips in painted AISI-316L Stainless Steel

Specially designed for 11016 & 11500 nozzles. Nevertheless can be mounted on any of the other nozzle sets except for the 11013.

Code	Standard Pack	Standard Weight in kg	Standard Volume in m^3
07536	1	1.6	0.02



Semicircular grab rail in polished AISI-316L Stainless Steel

AISI-316L polished stainless steel. Specially indicated for Marlin counter current swimming kit models; Marlin 30 II, Marlin 30 III and Marlin 45 III, although it may be mounted on any of the inlet sets, except for model 11013.

Code	Standard Pack	Standard Weight in kg	Standard Volume in m^3
37214	1	1.62	0.018

For all products on this page

Complies with Standard **EN 13451-1-3**

Complies with Standards **EN 16582-1** **EN 16713-2**

COUNTERCURRENT SWIMMING EQUIPMENT



Stainless Steel Housing

In AISI-316L stainless steel. 240 mm in depth. Suitable for both, concrete and prefabricated pools. Supplied with sealing elements and 3 m cable conduit.

Code	Standard Pack	Standard Weight in kg	Standard Volume in m^3
00243	1	7.79	0.04



Accessory for fitting in liner and fibreglass pools

In AISI-316L stainless steel, with seals and screws.

Code	Standard Pack	Standard Weight in kg	Standard Volume in m^3
00248	1	0.85	0.002



Housing

Made in unalterable plastic. Supplied with sealing elements and two conduits of 3 m each.

Code	Standard Pack	Standard Weight in kg	Standard Volume in m^3
11502	1	5.0	0.036



Accessory for fitting in liner and fibreglass pools

In plastic, with seals and screws.

Code	Standard Pack	Standard Weight in kg	Standard Volume in m^3
11503	1	0.6	0.003



Massage hose

To be fitted on to the discharge nozzle. Length: 1.5 m.

Code	Standard Pack	Standard Weight in kg	Standard Volume in m^3
00247	1	1.22	0.01



Pumps

Made of plastic. Double insulation motor shaft. IP-54 motor protection.

	Code	Standard Pack	Standard Weight in kg	Standard Volume in m^3
1.5 kW (2 HP) II 230 V 50 Hz	**11505**	1	27	0.098
2.2 kW (3 HP) II 230 V 50 Hz	**25415**	1	29	0.098
2.60 kW (3.5 HP) III 230/400 V 50 Hz	**11504**	1	30.5	0.098

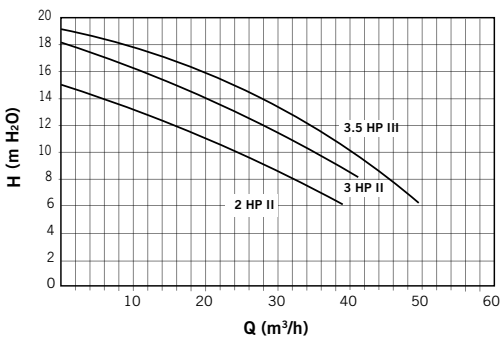

+ info
PDB Product Database
Further information on **PRODUCTS**
www.astralpool.com

COUNTERCURRENT SWIMMING EQUIPMENT



CCIV vertical drive pumps

Specially designed for countercurrent equipment with high performance output with larger diameter of discharge and suction. It is important not to add any special features to the installation as they may limit the performance significantly. All the pumps metal components in contact with water are manufactured in AISI-316L Stainless Steel, highly resistant to corrosion.

	Code	Standard Pack	Standard Weight in kg	Standard Volume in m^3
Power 1.5 Kw 2 HP II 230 V 50 Hz	**28566**	1	21.0	0.095
Power 2.2 Kw 3 HP II 230 V 50 Hz	**28568**	1	22.6	0.095
Power 2.2 Kw 3 HP III 230/400 V 50 Hz	**30774**	1	22.5	0.095
Power 4 Kw 5.5 HP III 230/400 V 50 Hz	**65549**	1	-	-

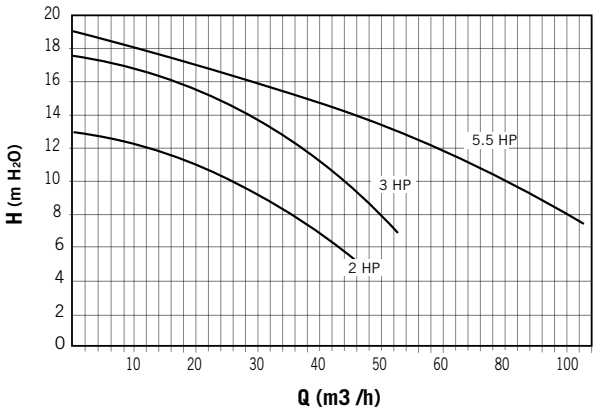



Control boxes

Electro-pneumatic box. Pumps are operated through the nozzle faceplate buttons.

	Code	Standard Pack	Standard Weight in kg	Standard Volume in m^3
For 230 V II 1.5 kW (2 HP) pumps	**11507**	1	1.2	0.004
For 230 V II 2.2 kW (3 HP) pumps	**25456**	1	1.2	0.004
For 400 V III 2.2 Kw (3 HP) pumps	**32151**	1	1.2	0.004
For 230/400 V III 2.6 kW (3.5 HP) pumps	**11506**	1	1.2	0.004
For 400 V III 4 kW (5.5 HP) pumps	**65536**	1	-	-



Nozzle assemblies with rectangular front plate in white plastic

Composed of: Faceplate, nozzle, On/OFF switch and air regulation knob. Components in AISI-316 Stainless Steel.

Code	Standard Pack	Standard Weight in kg	Standard Volume in m^3
11508	1	7.0	0.065

UNE-EN 13451-1-3
Complies with Standard **EN 13451-1-3**

UNE-EN 16582-1 EN 16713-2
Complies with Standards **EN 16582-1** **EN 16713-2**



Grab rails

In AISI-316L Stainless Steel. (2 units).

Code	Standard Pack	Standard Weight in kg	Standard Volume in m^3
05557	1	1.9	0.01

UNE-EN 13451-1-3
Complies with Standard **EN 13451-1-3**

UNE-EN 16582-1 EN 16713-2
Complies with Standards **EN 16582-1** **EN 16713-2**

COUNTERCURRENT SWIMMING EQUIPMENT



Twin Housing

In AISI-316L stainless steel. 240 mm in depth. Suitable for both, concrete and prefabricated pools. Supplied with sealing elements and 3 m cable conduit.

Code	Standard Pack	Standard Weight in kg	Standard Volume in m^3
05555	1	11.4	0.06



Accessory for mounting in prefabricated and liner pools

In AISI-316L Stainless Steel. With gaskets and screws.

Code	Standard Pack	Standard Weight in kg	Standard Volume in m^3
05558	1	1.35	0.01



Pumps

Made of plastic. Double insulation motor shaft. IP-54 motor protection

	Code	Standard Pack	Standard Weight in kg	Standard Volume in m^3
3.3 kW power (4.5 HP) III 230/400 V 50 Hz	**11509**	1	32.5	0.098

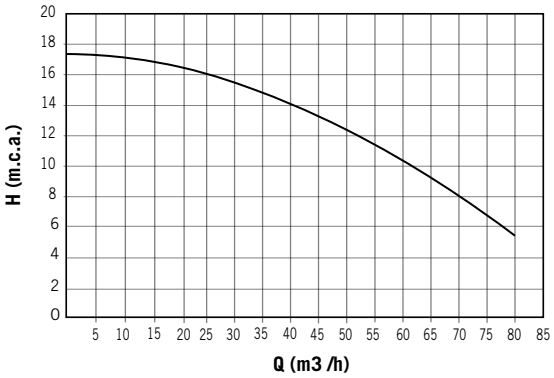



Control boxes

Electro-pneumatic box. Pumps are operated through the nozzle faceplate buttons.

	Code	Standard Pack	Standard Weight in kg	Standard Volume in m^3
For 400 V III 3.3 Kw (4.5 HP) pumps	**11510**	1	1.2	0.004

Complies with Standard **EN 13451-1-3**

Complies with Standards **EN 16582-1** **EN 16713-2**

COUNTERCURRENT SWIMMING EQUIPMENT





Marlin XS countercurrent swimming equipment

Set nozzle Mini Eco counter current unit. Highly competitive in its hydraulic performance. It can be installed in both concrete and prefabricated pools. Manufactured in white plastic parts. Consists of front panel nozzle set, stop/start push button and housing. Supplied with installation kit. Does not include pump or control box.

	Code	Standard Pack	Standard Weight in kg	Standard Volume in m^3
Marlin XS	**45618**	1	1.553	0.015

Marlin: inexpensive countercurrent swimming unit. The innovative design and concept supplied as a kit (including face plate, housing, control box and pump) makes it a feature that will add significant value to your pool. A highly competitive product thanks to its high performance hydraulic features, the Marlin countercurrent system is available in 3 models: the Marlin 30 II, the Marlin 30 III and the Marlin 45 III. Grab rails and hydromassage hose may be added as optional features.



Marlin 30 II (single-phase)

Consists of: Nozzle faceplate, plastic housing, control box and pump 2.2 kW (3 HP) 230 V II 50 Hz.

Code	Standard Pack	Standard Weight in kg	Standard Volume in m^3
35375	1	37.4	0.260

Marlin 30 III (three-phase)

Consists of: Nozzle faceplate, plastic housing, control box and pump 2.2 kW (3 HP) 400 V III 50 Hz.

Code	Standard Pack	Standard Weight in kg	Standard Volume in m^3
35376	1	37.4	0.260

Marlin 45 III (three-phase)

Consists of: Nozzle faceplate, plastic housing, control box and pump 3.3 kW (4.5 HP) 400 V III 50 Hz.

Code	Standard Pack	Standard Weight in kg	Standard Volume in m^3
35377	1	42.2	0.260

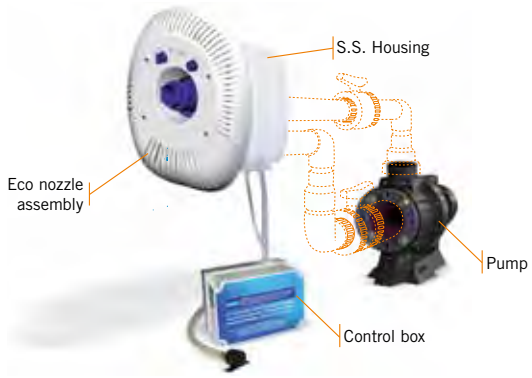

Part 11503 required for liner pools.

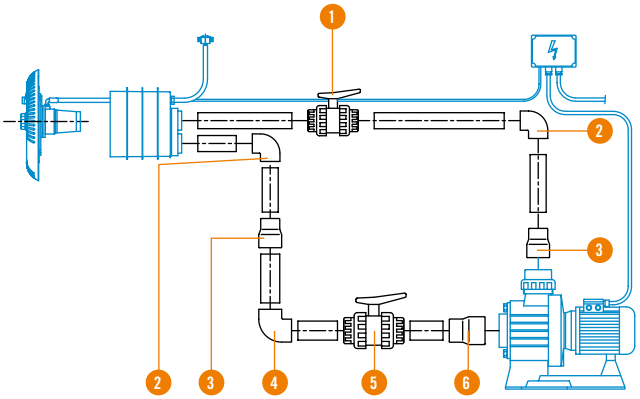

Accessories (not included in the kit)

Position	Quantity	Denomination	Code
1	1	PVC Ball valve Ø63 mm	**02458**
2	2	PVC elbow 90° Ø63 mm	**01717**
3	2	Conical reduction Ø90-75x63 mm	**01993**
4	1	PVC elbow 90° Ø75 mm	**01718**
5	1	PVC Ball valve Ø75 mm	**02459**
6	1	Conical reduction Ø110-90x75 mm	**01997**
-	-	PVC pipe Ø 63 mm PN-6	**02692**
-	-	PVC pipe Ø75 mm PN-6	**02693**

+ info
Further information on **PRODUCTS**
www.astralpool.com

BLOWER PUMPS



Air pump

Air pump designed for spas, baths, hydromassage installations and similar which produces a constant stream of air bubbles at medium and high air volume levels. It can also be used to stir up the filter bed, for example in back wash cycles where a low intensity air current is required.

The filter casing and impeller are made from an injected aluminium alloy whilst the motor spindle is manufactured from stainless steel, with the impeller dynamically balanced and directly adapted to the spindle. The motors, single phase or 3 phase for continuous use, are made from steel in compliance with CEI 2/3 1988 regulations, and feature IP54 external protection and class-F insulation. The standard voltages are100-120/200-240V for the monophase range and 200-240/380-440V for the triphase models, at 50/60Hz. The pumps can be mounted horizontally or vertically. Moreover, since there is no contact between the mobile parts and the pump static discharges, neither lubrication nor maintenance is necessary and it does not cause wear on the parts.

The turbines have a maximum working temperature of 40ºC. Do not use in conjunction with aggressive, inflammable or explosive gases.

Model	Code	Frequency (Hz)	Voltage (V)	Phase	Flow rate (m^3/h)	Max. Pressure (mbar)	Standard Weight kg	Standard Volume m^3
Blower 0.4 kW	**33970-2450**	50	Δ 200-240 Y 345-415	3	80	130	10	0.045
Blower 0.5 kW		60	Δ 220-275 Y 380-480	3	98	170		
Blower 0.85 kW	**35388-2450**	50	200-240	1	145	160	17	0.059
Blower 0.95 kW		60	200-240	1	175	160		
Blower 0.85 kW	**35387-2450**	50	Δ 200-240 Y 345-415	3	145	160	16	0.045
Blower 0.95 kW		60	Δ 220-275 Y 380-480	3	175	160		
Blower 1.3 kW	**31090-2450**	50	200-240	1	210	170	23	0.059
Blower 1.5 kW		60	200-240	1	255	140		
Blower 1.3 kW	**31091-2450**	50	Δ 200-240 Y 345-415	3	210	170	22	0.059
Blower 1.5 kW		60	Δ 220-275 Y 380-480	3	255	140		
Blower 1.5 kW	**33971-2450**	50	200-240	1	210	220	24	0.064
Blower 1.75 kW		60	200-240	1	255	220		
Blower 1.6 kW	**31092-2450**	50	Δ 200-240 Y 345-415	3	210	220	23	0.064
Blower 2.1 kW		60	Δ 220-275 Y 380-480	3	255	220		
Blower 1.6 kW 2V	**35389-2450**	50	Δ 200-240 Y 345-415	3	150	300	25	0.087
Blower 2.06 kW 2V		60	Δ 220-275 Y 380-480	3	180	310		
Blower 2.2 kW	**31093-2450**	50	Δ 200-240 Y 345-415	3	318	230	30	0.097
Blower 2.55 kW		60	Δ 220-275 Y 380-480	3	376	220		
Blower 3.0 kW 2V	**31094-2450**	50	Δ 200-240 Y 345-415	3	230	410	40	0.126
Blower 3.45 kW 2V		60	Δ 220-275 Y 380-480	3	275	400		
Blower 3.0 kW	**31095-2450**	50	Δ 200-240 Y 345-415	3	318	280	36	0.097
Blower 3.45 kW		60	Δ 220-275 Y 380-480	3	376	280		
Blower 4.3 kW 2V	**31096-2450**	50	Δ 345-415 Y 600-720	3	520	600	54	0.217
Blower 4.8 kW 2V		60	Δ 380-480 Y 660-720	3	385	320		
Blower 5.5 kW	**31097-2450**	50	Δ 345-415 Y 600-720	3	530	320	63	0.16
Blower 6.3 kW		60	Δ 380-480 Y 660-720	3	620	340		
Blower 5.5 kW 2V	**33972-2450**	50	Δ 345-415 Y 600-720	3	320	515	66	0.201
Blower 6.3 kW 2V		60	Δ 380-480 Y 660-720	3	385	530		
Blower 7.5 kW	**31098-2450**	50	Δ 345-415 Y 600-720	3	530	400	66	0.16
Blower 8.6 kW		60	Δ 380-480 Y 660-720	3	620	400		
Blower 11 kW 2V	**33973-2450**	50	Δ 345-415 Y 600-720	3	520	600	104	0.353
Blower 12.6 kW 2V		60	Δ 380-480 Y 660-720	3	620	600		
Blower 12.5 kW	**33974-2450**	50	Δ 345-415 Y 600-720	3	1050	270	116	0.353
Blower 14.5 kW		60	Δ 380-480 Y 660-720	3	1250	260		





WATER TREATMENT PRODUCTS

193 • Regulators
194 • Disinfectants
197 • Algicides
199 • Flocculants
201 • Cleaners
202 • Winterising products
203 • Accessories
204 • Blueriiot water testers
205 • Blue Connect accessories
210 • Pocket gauges
210 • Test kits and photometers

Structure of AstralPool labelling for chemical products

- Image overhaul
- Icon displays
- Differentiation by colour

An easy and convenient way of identifying ourselves.

Label

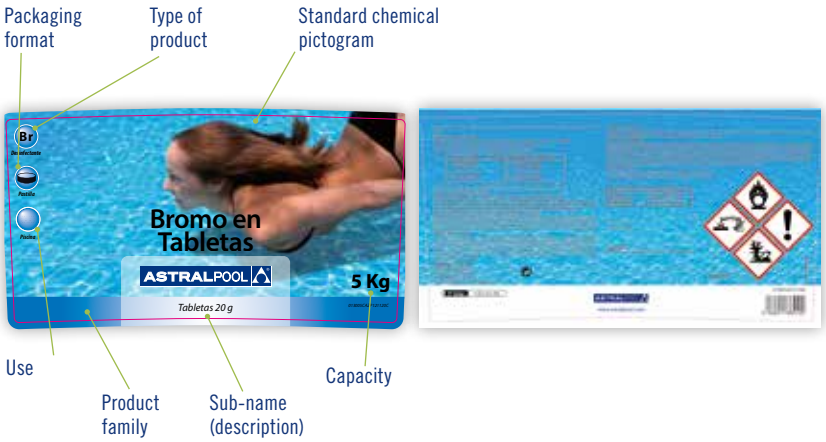

Icon description

Type of product

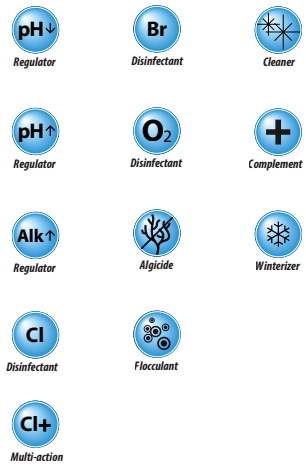

Product families by colour



- Disinfection
- Multi-action



- Regulators



- Algaecides



- Cleaning
- Flocculants
- Accessories

Packaging Presentation



Use

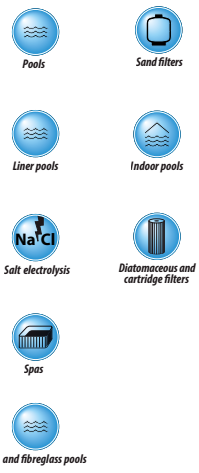

For minimum amounts, ask your dealer

REGULATORS



Solid pH Minor

Solid pH reducer. For adjusting the pH to between 7.2 and 7.6.

	Packaging	Code	Standard Pack	Kg/l/pallet
Square packaging	1.5 kg	**11384**	18	600
Square packaging	7 kg	**73139**	4	960
Square packaging	16 kg	**16540**	2	768
	40 kg	**11974**	1	480





Solid pH Plus

Solid pH enhancer. For adjusting the pH to between 7.2 and 7.6.

	Packaging	Code	Standard Pack	Kg/l/pallet
Square packaging	1 kg	**16538**	18	400
Square packaging	6 kg	**11386**	4	864
Square packaging	12 kg	**16539**	2	720
	35 kg	**15975**	1	630





Liquid pH Minor

Liquid pH reducer. Ideal for dosing with a pump.

		Packaging	Code	Standard Pack	Kg/l/pallet
Liquid pH Minor for professional use		10 l	**43290**	1	600
Liquid pH Minor for professional use		25 l	**16541**	1	600
Liquid pH Minor for end users	New	10 l	**73664**	1	600
Liquid pH Minor for end users		25 l	**73665**	1	600



Liquid pH Plus

Liquid pH enhancer. Ideal for dosing with a pump.

	Packaging	Code	Standard Pack	Kg/l/pallet
	25 l	**16542**	1	600



Alkalinity enhancer

Powder for increasing water alkalinity when it falls below 125 ppm.

	Packaging	Code	Standard Pack	Kg/l/pallet
Square packaging	6 kg	**15976**	4	864
	40 kg	**19933**	1	480

For minimum amounts, ask your dealer

DISINFECTANTS

Non-combustible chlorine. Non-combustible, multi-action trichloride tablets and blocks are also available. Non-combustible products are less dangerous, according to current laws, in comparison with combustible chlorinated products and, therefore, have the advantage of being able to be stored anywhere, pursuant to Royal Decree 379/2001 and the Seveso II Directive.



55% dichloride granules

Dichloride granules with 55% free available chlorine.

	Packaging	Code	Standard Pack	Kg/l/pallet
Square packaging	1 kg	**11393**	18	400
Square packaging	5 kg	**11394**	4	720
	30 kg	**11395**	1	540
	50 kg	**11396**	1	600



Fast-dissolving chlorine tablets

Trichloride 20-g tablets with 50% free available chlorine.

	Packaging	Code	Standard Pack	Kg/l/pallet
Square packaging	1 kg	**11397**	18	400
Square packaging	5 kg	**11398**	4	720
	25 kg	**11399**	1	450



Trichloride powder

Trichloride powder with 90% free available chlorine.

	Packaging	Code	Standard Pack	Kg/l/pallet
Square packaging	1 kg	**11400**	18	400
Square packaging	5 kg	**11401**	4	720
	30 kg	**11402**	1	540
	50 kg	**11403**	1	600

For minimum amounts, ask your dealer

DISINFECTANTS



Trichloride granules

Trichloride granules with 90% free available chlorine.

	Packaging	Code	Standard Pack	Kg/l/pallet
Square packaging	1 kg	**11404**	18	400
Square packaging	5 kg	**11405**	4	720
	30 kg	**11406**	1	540
	50 kg	**11407**	1	600



250-g trichloride tablets

Slow-dissolving 250-g trichloride blocks with 90% free available chlorine.

	Packaging	Code	Standard Pack	Kg/l/pallet
Square packaging	1 kg	**34433**	18	540
Square packaging	5 kg	**34434**	4	720
	25 Kg	**34436**	1	450
	50 Kg	**34437**	1	600



Action 10

250-g multipurpose tablets that perform the functions of the following 10 products: disinfectant, algicide, bactericide, algaestat, virucide, fungicide, flocculant-coagulant, pH reducer, stabilizer and descaler.

	Packaging	Code	Standard Pack	Kg/l/pallet
Square packaging	5 kg	**25325**	4	720



Multi-action block

Slow-dissolving, 500-g blocks that act as an algicide, bactericide and flocculant. In individual film wrappers.

	Packaging	Code	Standard Pack	Kg/l/pallet
	5 kg	**25316**	4	480
	25 kg	**25355**	1	450

For minimum amounts, ask your dealer

DISINFECTANTS



Multi-action granules

Granules that act as a bactericide, algicide and flocculant.

Packaging	Code	Standard Pack	Kg/l/pallet
1 kg	**15983**	18	400
5 kg	**15984**	4	480
30 kg	**15985**	1	540





Multi-action 250-g tablet

Slow-dissolving, 250-g tablet that acts as an algicide, bactericide and flocculant.

Packaging	Code	Standard Pack	Kg/l/pallet
Square packaging 1 kg	**34438**	18	540
Square packaging 5 kg	**34439**	4	720
25 kg	**34441**	1	450



Special multi-purpose tablet for hard water

Solid compound in tablet form, specially formulated so that a single dose will remove bacteria, viruses and microorganisms from pool water, which prevents algae from growing, limescale from forming and keeps the water crystal clear.

Packaging	Code	Standard Pack	Kg/l/pallet
1 kg	**40935**	12	576
5 kg	**40936**	4	720
25 kg	**40938**	1	450

DISINFECTANTS



Bromine tablets

Slow-dissolving 20-g bromine tablets for the continuous disinfection of pools and spas. Does not smell of chlorine. High tolerance to pH levels. Powerful disinfectant and oxidising agent.

Packaging	Code	Standard Pack	Kg/l/pallet
5 kg	**16550**	4	400
20 kg	**28740**	1	540

ALGICIDES



Algicides

Prevents the formation of algae in pools.

Packaging	Code	Standard Pack	Kg/l/pallet
5 l	**11417**	1	600
25 l	**11418**	1	600



Algicide with brightener

A powerful bactericide, algicide and fungicide.

Packaging	Code	Standard Pack	Kg/l/pallet
1 l	**11413**	12	480
5 l	**11414**	4	640
25 l	**11415**	1	600



Algicide Extra

Highly efficient non-foaming algicide that also acts as a flocculant.

Packaging	Code	Standard Pack	Kg/l/pallet
5 l	**24616**	4	640
25 l	**11424**	1	600

For minimum amounts, ask your dealer

ALGICIDES

PhosFree



Instantly removes what algae feed on.

Concentrated product: lasts for 13 weeks*

* 80 ml a week for a 50 m³ pool.

Concentrated product that prevents the formation of algae as a result of chemicals, garden fertilizers and other contaminating agents. It removes the phosphates on which algae feed, thus inhibiting their growth.

Suitable for use in all types of pools, filters and disinfection treatment systems.

- Is easy to use.
- Improves the performance of salt chlorinators.

Recommended use:
The concentration of phosphates should be kept below 125 ppb (parts per billion) to prevent the formation of algae.

Initial treatment for high phosphate levels:

1. Ensure the filter is clean and that the system is working properly.
2. Pour the required concentration of PhosFree in a container with water and spread the solution evenly across the surface of the pool.
3. Keep the filtration system running for at least 24 hours following application.
4. Test the phosphate level of your pool using a phosphate test kit 48 hours later. If necessary, repeat the treatment.

	Packaging	Code	Standard Pack	Kg/l/pallet
PhosFree	1 l	**65957**	12	480
Phosphate test strips	25 strips	**64291**	12	-



64291

For a 50 m³ pool				
Phosphate level of the pool	250 ppb	500 ppb	1000 ppb	1500 ppb
Phosfree ml	150	300	600	900

Algicide Power



More power in each drop!

Concentrated product: 25 weeks (1 l)

A fast-acting compound formulated from surfactants that displays great properties as an algicide and fungicide, which therefore prevents the formation and growth of algae in pool water.

Prevention is better than cure:
Concentrated maintenance product that keeps pools free of all types of algae thanks to its powerful properties.

The revolutionary dosing cap will enable you to add exactly the amount of the product you need, thus helping you to make savings and use it more efficiently.

Packaging	Code	Standard Pack	Kg/l/pallet
1 l	**63124**	12	480

For minimum amounts, ask your dealer

ALGICIDES

Algicide Extra Power



An extra strong, fast-acting algicide with micro-flocculant properties that makes it better able to prevent the appearance of algae that live suspended in the water. **Non-foaming.**

Concentrated maintenance product that keeps pools free of all types of algae thanks to its powerful properties.

The revolutionary dosing cap will enable you to add exactly the amount of the product you need, thus helping you to make savings and use it more efficiently.

Packaging	Code	Standard Pack	Kg/l/pallet
1 l	**63126**	12	480

Non-foaming.

Concentrated product: 20 weeks (1 l)

FLOCCULANTS

Natural Flocculant



This natural clarifier made from chitosan (crustacean shells) is the most effective weekly treatment for preventing the formation of foam and cloudiness in pool water. It removes all traces of body oils and lotions, as well as excess metal precipitates.

Suitable for use in all types of pools and filters.

- Keeps water crystal clear, which helps the filter collect dirt.
- Removes excess metal precipitates.
- Helps make cleaning filters quicker and easier.
- Improves the performance of salt chlorinators.

Recommended use:
To keep your pool water crystal clear, treat it with the recommended dose of Natural Clarifier once a week. For home pools that are used a lot or for public pools, treat the pool water with twice or three times the recommended dose.

Packaging	Code	Standard Pack	Units/pallet
1 l	**65956**	12	480

The natural way to make water clean and transparent.

Concentrated product: 25 weeks (1 l)

* 40 ml a week for a 50 m^3 pool.

CrystalBlock – Single dose gel flocculant



The easiest way to enjoy crystal clear water. No handling or complicated dosing systems required. It has never been easier to enjoy crystal clear water. Ideal for all pool types, except ones with cartridge or diatomaceous earth filters.

The single dose gel blocks will enable you to add the exact amount of the product with next to no effort. CrystalBlock collects colloidal particles and algae spores so that they are filtered better.

- Increases filter efficiency.
- Helps keep your pool water crystal clear.
- Improves the efficiency of disinfectants.

Packaging	Code	Standard Pack	Units/pallet
36 UN	**67558**	72	10.800

For minimum amounts, ask your dealer

FLOCCULANTS



Liquid flocculant

Clarifies water by eliminating the colloidal particles that cause cloudiness in water.

Packaging	Code	Standard Pack	Kg/l/pallet
1 l	**11387**	12	480
5 l	**11388**	4	640
25 l	**11389**	1	600



Solid flocculant

Long-lasting improvement of water transparency through permanent flocculation.

Packaging		Code	Standard Pack	kg/pallet
1 kg of product in 8 bags (8 bags of 125 g each)	1 kg (8 x 125 g)	**11390**	14	490



Claritab Plus

Super concentrated dual action coagulant and flocculant tablets, specially formulated to obtain the best performance from sand filters. The slow dissolving and controlled action completely removes suspended particles in the water (metal ions, organic matter, etc.). Savings are made as fewer disinfectants are used.

Packaging		Code	Standard Pack	Units/pallet
Display 20 units	Unit: 5 x 20 g	**72769**	24	960

For minimum amounts, ask your dealer

CLEANERS



Extra descaler

Extra strong descaler. Acid.

Packaging	Code	Standard Pack	Kg/l/pallet
5 l	**11391**	4	640
25 l	**11392**	1	600



Specially formulated descaler for polyester and fibreglass pools.

It combats limescale and grease without damaging pool lining.

Packaging	Code	Standard Pack	Kg/l/pallet
5 l	**16558**	4	640

For minimum amounts, ask your dealer

CLEANERS



Non-foaming water line degreaser

A specially formulated compound for removing scum and dirt from pool edges and walls, and areas around them that may require cleaning.

Packaging	Code	Standard Pack	Kg/l/pallet
1 l	**11425**	12	480
5 l	**11426**	4	640
25 l	**11427**	1	600



Gelamin

Gel descaler for pool walls and floors. Highly effective. Easy to use.

Packaging	Code	Standard Pack	Kg/l/pallet
5 l	**15987**	4	640



Gel descaler specially formulated for the water line.

Powerful liquid descaler with degreasing properties for cleaning the water line.

Packaging	Code	Standard Pack	Kg/l/pallet
1 l	**40931**	12	480
5 l	**40932**	4	640
25 l	**40934**	1	600



Liquid Filnet

Liquid descaler specially designed for cleaning the inside of sand filters in public pools.

Packaging	Code	Standard Pack	Kg/l/pallet
5 l	**73557**	4	640
25 l	**73558**	1	600



Step 1 Polisher

Stainless steel polisher and rust remover.

Packaging	Code	Standard Pack	Kg/l/pallet
750 ml	**72847**	12	432



Step 2 Brightener

Product designed to care and polish stainless steel.

Packaging	Code	Standard Pack	Kg/l/pallet
750 ml	**72848**	12	432

For minimum amounts, ask your dealer

CLEANERS



Solid Filnet

A solid descaler for cleaning the inside of sand filters.

Packaging	Code	Standard Pack	Kg/l/pallet
1 kg	**15988**	18	540



Stainless steel cleaner-polish

Stainless steel cleaner-polish. It removes stains and degreases all types of stainless steel surfaces.

Packaging	Code	Standard Pack	Kg/l/pallet
1 l	**72845***	12	480
5 l	**72846***	4	640

* New codes replace old codes 18713 and 16630.



New

Surf-Clean

Surface sanitizer with a pleasant pine smell for all kinds of surfaces.

Packaging	Code	Standard Pack	Kg/l/pallet
1 l	**73666**	9	432
5 l	**73667**	4	720
25 l	**73668**	1	450

For minimum amounts, ask your dealer

WINTERISING PRODUCTS



Winterizer

Prevents the proliferation of algae and bacteria in the water. Prevents water from going stagnant and the build-up of limescale. Takes the strain out of spring cleaning. Non-foaming.

Packaging	Code	Standard Pack	Kg/l/pallet
5 l	**11430**	4	640



Copper-free Power Winterizer

Concentrated winterizer specially formulated for liner and polyester pools that will enable you to keep your pool water in top condition during winter as it prevents the formation of algae and bacteria. Saves water as it can be used from one season to the next.

The revolutionary dosing cap will enable you to add exactly the amount of the product you need, thus helping you to make savings and use it more efficiently.

At the end of the bathing season before ending regular maintenance treatment, a super-chlorination should be performed using dichlor granules.

It is advisable to repeat the process halfway through the winter season.

Packaging	Code	Standard Pack	Kg/l/pallet
1 l	**63165**	12	480

More power in each drop!

Concentrated product:
0,5 L / 40 - 50 m³

For minimum amounts, ask your dealer

ACCESSORIES



Inverlong

Full treatment for pools in winter. Prevents the water from going stagnant and the proliferation of algae. Keeps the water crystal clear. Acts as a bactericide, algicide and flocculant. Comes with a floating dispenser.

Packaging	Code	Standard Pack	Units/pallet
1.75 kg	**69872**	8	128



Kit-Splash

Children's pool maintenance kit. It contains 0.5 l of dichlor granules and 0.5 l of concentrated algicide.

Packaging	Code	Standard Pack	Units/pallet
Kit	**15986**	14	294



Chlorine stabilizer

Prevents the rapid breakdown of chlorine by the sun's UV rays.

Packaging	Code	Standard Pack	Kg/l/pallet
1 kg	**16556**	12	360
4,5 kg	**72812**	4	480
25 kg	**19935**	1	450



Chlorine and bromine neutralizer

For the removal of excess residual chlorine or bromine.

Packaging	Code	Standard Pack	Kg/l/pallet
6 kg	**16578**	4	576



Super descaler

Highly efficient descaler. Prevents the precipitation of lime and the build-up of limescale. Prevents pipes from getting blocked.

Packaging	Code	Standard Pack	Kg/l/pallet
5 l	**16555**	4	640



Descaler

Prevents limescale.

Packaging	Code	Standard Pack	Kg/l/pallet
5 l	**11431**	4	640

BLUERIIOT WATER TESTERS



Blue Check

Smart test strip (50 strips).

- pH.
- Free chlorine.
- Bromine.
- Total alkalinity.
- Total hardness.
- Cyanuric acid.
- Blueriiot Pool & spa Assistant free app.

Code	Standard Pack	Standard Weight in kg	Standard Volume in m^3
71664*	1	-	-
71665*	1	-	-

*71664 : Packaging in English, French, Dutch and German.
*71665 : Packaging in English, Spanish, Italian and Portuguese.



Blue Connect GO

The smart pool analyser.

- Temperature.
- pH.
- ORP (Platinum).
- Works with Bluetooth.
- Blueriiot Pool & spa Assistant free app.
- Compatible with chlorine and bromine pools and spas. Not compatible with salt chlorinator pools and spas.

Code	Standard Pack	Standard Weight in kg	Standard Volume in m^3
73014	1	-	-



Blue Connect Plus (Gold)

The smart pool analyser.

- Temperature.
- pH.
- ORP (Gold).
- Conductivity (Salinity).
- Works with Bluetooth.
- Up to 20 automatical measurements.
- Blueriiot Pool & spa Assistant free app.
- Blueriiot Premium lifetime.
- Blue Fit50.
- Virtual Pool Care (Pools) lifetime.
- Compatible with chlorine, bromine and salt chlorinator pools and spas.

Code	Standard Pack	Standard Weight in kg	Standard Volume in m^3
71663	1	-	-

BLUE CONNECT ACCESSORIES



Fit

50 mm or 60 mm tapping saddle.

	Code	Standard Pack	Standard Weight in kg	Standard Volume in m³
50 mm tapping saddle	**7015C002**	1	-	-
60 mm tapping saddle	**71882**	1	-	-



Calibration Kit

2 x 20ml packets of pH4.
2 x 20ml packets of pH7.
2 x 20ml packets of ORP 468 mV.

Code	Standard Pack	Standard Weight in kg	Standard Volume in m³
71666	6	-	-



Battery

Battery for *Blue Connect*:
1 year warranty.

Code	Standard Pack	Standard Weight in kg	Standard Volume in m³
7015C001	1	-	-



Sensor

Sensors for Blue Connect:

- 3-in-1 sensor Pt and 4-in-1 sensor Pt : Compatible with chlorine, bromine pools and spas.
- 4-in-1 sensor Au : compatible with chlorine, bromine and salt pools and spas.
- 2 years warranty.

	Code	Standard Pack	Standard Weight in kg	Standard Volume in m³
4-in-1 sensor Pt	**7015R001**	1	-	-
4-in-1 sensor Au	**7015R002**	1	-	-
3-in-1 sensor Pt New	**7015R003**	1	-	-



Extender

Wi-Fi bridge.
With Blue Extender, use Blue Connect with a Wi-Fi network.

Code	Standard Pack	Standard Weight in kg	Standard Volume in m³
7015C004	1	-	-

TESTERS



3-in-1 test strips

Quick and easy test for free chlorine, pH and alkalinity. Contains 50 strips.

Code	Standard Pack	Standard Weight in kg	Standard Volume in m^3
41925	10	0.6	0.005



6-in-1 test strips

Quick and easy test for free chlorine, pH, alkalinity, bromine, water hardness and cyanuric acid. Contains 50 strips.

Code	Standard Pack	Standard Weight in kg	Standard Volume in m^3
45198	10	0.6	0.005



Reagent refills

1 OTO and 1 phenol refill

Code	Standard Pack	Standard Weight in kg	Standard Volume in m^3
38638	144	8	0.037



Basic pH and chlorine test kit - Basic Line

With OTO and phenol

Code	Standard Pack	Standard Weight in kg	Standard Volume in m^3
38637	48	8	0.054



Total chlorine and pH comparison test kit

Comes in a modern, practical design. Packaged in a blue plastic box. Comes with OTO and liquid phenol.

Code	Standard Pack	Standard Weight in kg	Standard Volume in m^3
25353	25	4.8	0.019



Chlorine, bromine and pH comparison test kit

Comes in a modern, practical design. Packaged in a blue plastic box. Comes with phenol and DPD tablets.

Code	Standard Pack	Standard Weight in kg	Standard Volume in m^3
26155	25	4.8	0.019

TESTERS



Liquid active oxygen tester

For testing the residual liquid active oxygen in the water.

Code	Standard Pack	Standard Weight in kg	Standard Volume in m³
26082	1	15.4	0.0265



28050 28051

Reagent refills

		Code	Standard Pack	Standard Weight in kg	Standard Volume in m³
OTO refill	15 cm³	**28050**	50	2.1	0.020
Phenol refill	15 cm³	**28051**	50	2.1	0.020
OTO refill	250 cm³	**16623**	20	5.5	0.010
Phenol refill	250 cm³	**16624**	20	5.5	0.010
1 OTO and 1 phenol refill	15 cm³	**16610**	50	3.5	0.020



16623 16610



Free chlorine and pH Pooltester

	Code	Standard Pack	Standard Weight in kg	Standard Volume in m³
Chlorine range: 0.1–3.0 mg/l pH range: 6.8–8.2	**03253**	12	2.2	0.007
Chlorine range: 0.5–6.0 mg/l ph range: 6.8–8.2	**01419**	12	2.2	0.007



Oxygen and pH Pooltester

Code	Standard Pack	Standard Weight in kg	Standard Volume in m³
03182	12	2.2	0.007



Bromine and pH Pooltester

Code	Standard Pack	Standard Weight in kg	Standard Volume in m³
16374	12	2.2	0.007

TESTERS



Copper test kit

Code	Standard Pack	Standard Weight in kg	Standard Volume in m³
03258	1	0.2	0.004



Pooltester refill blister pack

20 DPD-1 tablets and 20 red phenol tablets.

Code	Standard Pack	Standard Weight in kg	Standard Volume in m³
18854	30	1.4	0.010



Reagent tablets

		Code	Standard Pack	Standard Weight in kg	Standard Volume in m³
Phenol reagent tablets (pH)	250 units	**01426**	1	0.1	0.004
DPD-1 reagent tablets	250 units	**01424**	1	0.1	0.004
DPD 2 reagent tablets	250 units	**43409**	1	0.1	0.004
DPD-3 reagent tablets	250 units	**01425**	1	0.1	0.004
DPD 4 reagent tablets	250 units	**43408**	1	0.1	0.004
MPS-OUT reagent tablets (test for the amount of chlorine in the presence of Oximines)	250 units	**08677**	1	0.1	0.004



3-in-1 test strips: MPS

Tests for potassium monopersulphate, pH and total alkalinity. Each pack contains 50 strips.

Code	Standard Pack	Standard Weight in kg	Standard Volume in m³
57500	-	-	-



4-in-1 test strips: free chlorine

Quick and easy test for free chlorine, pH and total alkalinity in pools treated with chlorine. Each pack contains 50 strips.

Code	Standard Pack	Standard Weight in kg	Standard Volume in m³
11732	-	-	- -



4-in-1 test strips: bromine

Quick and easy test for bromine, pH and total alkalinity in pools treated with bromine. Each pack contains 50 strips.

Code	Standard Pack	Standard Weight in kg	Standard Volume in m³
54467	-	-	- -

TESTERS



Salt test kit

Salt test strips for checking salt levels. Salt levels must be checked on a regular basis as the water is renewed.

Code	Standard Pack	Standard Weight in kg	Standard Volume in m³	
07937	-	-	-	-



TruTest test strips

50 TruTest 3-in-1 test strips (test for free chlorine and bromine, pH and total alkalinity).

Code	Standard Pack	Standard Weight in kg	Standard Volume in m³
40817	-	-	-



Digital test strip reader

Digital test strip reader for measuring total free chlorine/bromine, pH and alkalinity. It combines the simplicity and accuracy of test strips with advanced digital technology. You will no longer have to guess the exact results of test strips. Just wet a test strip in your pool or spa water, put it in the reader and you will obtain fast, accurate results.

Code	Standard Pack	Standard Weight in kg	Standard Volume in m³
38813	-	-	-



TruTest kit

Comes with:
- 1 display rack and banner for your point of sale.
- 6 digital test strip readers.
- 6 packs of TruTest digital test strips.

Code	Standard Pack	Standard Weight in kg	Standard Volume in m³
41653	-	-	-

POCKET GAUGES



Dissolved solids pocket gauge

A small, practical pocket gauge for quickly measuring the solids dissolved in the water.

Code	Standard Pack	Standard Weight in kg	Standard Volume in m^3
41928	1	-	-



Redox pocket gauge

A small, practical pocket gauge for quickly measuring the redox level in pool water.

Code	Standard Pack	Standard Weight in kg	Standard Volume in m^3
28583	1	-	-



pH pocket gauge

A small, practical pocket gauge for quickly measuring the pH level in pool water.

Code	Standard Pack	Standard Weight in kg	Standard Volume in m^3
43447	1	-	-



Conductivity pocket gauge

A small, practical pocket gauge for quickly measuring conductivity.

Code	Standard Pack	Standard Weight in kg	Standard Volume in m^3
43428	1	-	-

Range: 0.1–19.9 mS/cm.

TEST KITS AND PHOTOMETERS



3-in-1 photometer

Chlorine: 0.01–5.0 mg/l
Isocyanuric acid 2–200 mg/l
pH: 6.8 - 8.4

Code	Standard Pack	Standard Weight in kg	Standard Volume in m^3
47189	1	1.0	0.049

TEST KITS AND PHOTOMETERS



6-in-1 photometer

Chlorine range: 0.01–5.0 mg/l
ph range: 6.8–8.4
Isocyanuric acid 2–200 mg/l
Calcium hardness: 5–500 mg/l
Bromine: 0.01–5.0 mg/l
Alkalinity: 10–500 mg/l

Code	Standard Pack	Standard Weight in kg	Standard Volume in m^3
47190	1	1.0	0.049



3-in-1 photometer PC test kit

Chlorine range: 0.05–6.0 mg/l
ph range: 6.5–8.4
Cyanuric acid range: 0–80.0 mg/l

Code	Standard Pack	Standard Weight in kg	Standard Volume in m^3
54567	1	1.0	0.049



Pool-Control-Direct

Multiparameter photometer that enables a wide range of tests to be performed that cover all pool water readings. Intended for pool dealers.

	Code	Standard Pack	Standard Weight in kg	Standard Volume in m^3
Pool-Control-Direct	**41922**	1	1.9	0.023

Parameters tested (the reagents required can be ordered):

Alkalinity: 10 – 500 mg/l
Aluminium: 0.02–0.5 mg/l
Ammonia: 0.01–1.0 mg/l
Cyanuric acid: 2–200 mg/l
Biguanide: 2–100 mg/l
Bromine: 0.04–10.0 mg/l
Calcium hardness: 5–500 mg/l
Chloride: 10–500 mg/l
Free chlorine: 0.01–5.0 mg/l
Total chlorine: 0.01–5.0 mg/l
Free chlorine released: 0.01–10 mg/l
Total chlorine released: 0.01–10 mg/l
Chlorine range: 1–250 mg/l
Total copper 0.03–5.0 mg/l
Free copper: 0.03–5.0 mg/l
Total hardness: 5–500 mg/l
Phosphates: 0.03–4.0 mg/l
Iron: 0.01–1.0 mg/l
Manganese: 0.001–0.03 mg/l
Nitrates: 0.02–20 mg/l
Ozone: 0.01–2.0 mg/l
Hydrogen peroxide: 1–100 mg/l
pH: 6,8 – 8,4
Salt level: 0–10.000 mg/l
Sulphates: 5–200 mg/l



5-in-1 photometer PC test kit

Chlorine range: 0.05–6.0 mg/l
ph range: 6.5–8.4
Cyanuric acid range: 0–80.0 mg/l
Alkalinity range: 5–200 mg/l
Calcium hardness range: 50–500 mg/l

Code	Standard Pack	Standard Weight in kg	Standard Volume in m^3
54568	1	1.0	0.049

TEST KITS AND PHOTOMETERS



Code 03009

Photometer reagents

		Code	Standard Pack	Standard Weight in kg	Standard Volume in m^3
Phenol reagent tablets (pH)	250 units	**03019**	1	0.1	0.004
DPD-1 reagent tablets	250 units	**03009**	1	0.1	0.004
DPD-3 reagent tablets	250 units	**03014**	1	0.1	0.004
MPS-OUT reagent tablets (test for the amount of chlorine in the presence of Oximines)	250 units	**08679**	1	0.1	0.004
Isocyanuric acid reagent tablets	250 units	**08345**	1	0.1	0.004
Other reagents		**Consult**			



WATER TREATMENT EQUIPMENT

214 • Residential pools water treatment solutions
215 • Salt water electrolysis - Residential pools
220 • Automatic UV disinfection - Residential pools
224 • pH & Chlorine automatic regulations - Residential pools
228 • Dosing pumps for residential pools
231 • Dosing equipment
234 • Water meters & Control devices

RESIDENTIAL POOLS WATER TREATMENT SOLUTIONS

Disinfection management and pH management represent 20% of pool water treatment but 80% of daily in-store enquiries. Correctly managing disinfection and pH is then key for a perfect pool experience. AstralPool® offers 4 product families to relieve the pool owners from constraints.

How to chose the most adapted water treatment solution?

Our water treatment product portfolio allows pool owners to adapt their equipment to their needs, from lowering maintenance constraints to increasing bathing comfort, connectivity or environmentally friendly solutions. The chart below will help you chose the best option for your pool.

For an optimal disinfection against pathogens (bacteria, viruses, fungi...), you may combine UV treatment with chlorinated treatment. It delivers a larger efficacy spectrum ensuring pool's water is disintected AND disinfectant.

Range ramp up



		Dosing	UV	Salt Water Electrolysis	Neolysis
Type of disinfection		Liquid chlorine	UV treatment	Salt water chlorination	UV treatment + Salt water chlorination
pH regulation*		✓	✓	✓	✓
Disinfection regulation		✓	✓	✓	✓
Automated dosing / disinfecting		✓	✓	✓	✓
Remote control of the device with Fluidra Connect (using app/website)*		✓	-	✓	✓
Reduced maintenance constraints		✓	✓✓	✓✓✓	✓✓✓
Reduced use/handling of chemicals		✓	✓✓	✓✓✓	✓✓✓
Gentle and healthy treatment		✓	✓✓	✓✓	✓✓✓
Investment	**At installation**	€ - €€€	€€ - €€€	€€ - €€€€	€€€ - €€€€
	Seasonal cost	€€€	€€	€€	€€

* When ✓ : depending on model.

SALT WATER ELECTROLYSIS - RESIDENTIAL POOLS

Model comparison (master ranges)







Product name	Elite Connect				Smart Next					Energy Sel			Bering Sel
Chlorine output (g/h)	12	24	32	42	7	12	21	30	40	9	13	19	8
Pool volume Based on 8 h/day of chlorination for a pool water = 25°C (if pool water > 25°C : -15% max volume)	50	100	150	200	30	50	90	140	180	40	55	85	35
Salinity (g/L)	Standard Mini: 5 - Ideal: 6 Low Salt Mini: 1 - Ideal: 2				Mini: 5 - Ideal: 6					Mini: 3,5 - Ideal: 4			Mini: 3,2 - Ideal: 4
Output control	0-100%				0-100% (10 levels)					0-100%			0-100%
User interface	2,8" TFT colour touchscreen				Back-lit touchscreen					2 digits LCD screen			LED
Minimum flow rate (m^3/h)	2	4	6	8	2	3	5	6	8	2	3	4	3
Electric power (W)	83	165	205	205	46	92	92	184	207	70			100
Protection rating	IP65				IP65					IP45			IP24
Type of cell	Horizontal or vertical				Horizontal or vertical					Horizontal or vertical			Horizontal or vertical
Cell service life	12,000 h				10,000 h					8,000 h			8,000 h
Polarity reversal	✓ (2-3-4 h)				✓ (2-3 h)					✓ (0 to 99 h)			✓
Cover mode	✓				✓					✓			-
Lack of water:													
Gas sensor	✓				✓					-			-
Flow Switch	✓				✓ (Optional)					✓ (Optional)			-
Salt fail-safe mode (High - Low)	✓				✓					-			-
Running time counter	✓				✓					-			-
Temperature display	✓				✓					-			-
Salinity display	✓				✓					-			-
Connectivity:													
NN-compatible	✓				✓					-			-
PoolStation included	✓				-					-			-
External output control	✓				✓					-			-
pH control	✓ (Scalable)				✓ (Optional)					-			-
Sensor holder included	✓				✓					-			-
pH pump included	✓				✓					-			-
ORP control	✓ (Scalable)				✓ (Optional)					-			-
ppm control	✓ (Scalable)				-					-			-
Low Salt version	✓				-					-			-
Timer	✓				-					-			-
Inputs - Outputs	4 (digital) - 4 (relays)				-					-			-
Warranty	3 years				2 years					2 years			2 years

+ info PDB Product Database
Further information on **PRODUCTS**
www.astralpool.com

SALT WATER ELECTROLYSIS - RESIDENTIAL POOLS

Elite Connect



A fully automated pH and chlorine control unit with all of the added advantages of salt water chlorination.

- Connected product using built-in Ethernet port and PoolStation app (available on iOS & aOS).
- NN compatible: Smart control within Fluidra Connect pool automation and NN app (available on iOS & aOS).
- Scalable control functions with S-Driver® plug-in modules (pH, Rx and Cl ppm).
- 2.8'' TFT colour touchscreen.
- 4 digital inputs and 4 digital outputs (relays) to control filter pump, heater, lighting, etc.
- Equipped with a gas sensor, a flow switch and a compact sensor holder as standard.
- Equipped with high quality electrodes, with a service life of up to 12,000 hours under normal conditions.
- Output control from 0 to 100%.
- pH dosing pump included with pH option.
- Low-salt version (1–4 g/l).
- VSP driver that can control 3-speed variable speed pumps and backwash piston valves.
- Optional Power & Control cabinet to ease the installation between Elite Connect and the controlled pool equipment. See page 224.

COMPATIBLE NN thing
Fluidra Connect compatible

PoolStation
Embedded System

Modbus







Possibility of upgrading the unit with S-Driver® modules

	Code	Standard Pack	Standard Weight in kg	Standard Volume in m³
Elite Connect				
Up to 50 m³ 12 g/h	**70012**	1	6.30	0.047
Up to 100 m³ 24 g/h	**70013**	1	8.20	0.047
Up to 150 m³ 32 g/h	**70014**	1	9.10	0.047
Up to 200 m³ 42 g/h	**70016**	1	9.50	0.047
Elite Connect pH				
Up to 50 m³ pH 12 g/h	**70019**	1	7.70	0.047
Up to 100 m³ pH 24 g/h	**70021**	1	9.50	0.047
Up to 150 m³ pH 32 g/h	**70023**	1	10.60	0.047
Up to 200 m³ pH 42 g/h	**70025**	1	10.90	0.047
Elite Connect pH/Rx				
Up to 50 m³ 12 g/h	**70031**	1	8.15	0.047
Up to 100 m³ 24 g/h	**70032**	1	9.95	0.047
Up to 150 m³ 32 g/h	**70033**	1	11.05	0.047
Up to 200 m³ 42 g/h	**70035**	1	11.35	0.047
Elite Connect pH/ppm				
Up to 50 m³ 12 g/h	**70361**	1	13.80	0.080
Up to 100 m³ 24 g/h	**70363**	1	14.90	0.080
Up to 150 m³ 32 g/h	**70365**	1	16.60	0.080
Up to 200 m³ 42 g/h	**70369**	1	16.90	0.080
Elite Connect LS				
LS. Up to 50 m³ 12 g/h	**70037**	1	6.30	0.047
LS. Up to 100 m³ 24 g/h	**70039**	1	8.20	0.047
LS pH. Up to 50 m³ 12 g/h	**70040**	1	7.70	0.047
LS pH. Up to 100 m³ 24 g/h	**70042**	1	9.50	0.047
LS pH/Rx. Up to 50 m³ 12 g/h	**70047**	1	7.80	0.047
LS pH/Rx. Up to 100 m³ 24 g/h	**70048**	1	8.90	0.047
LS pH/ppm. Up to 50 m³ 12 g/h	**70371**	1	14.90	0.080
LS pH/ppm. Up to 100 m³ 24 g/h	**70372**	1	16.60	0.080
Driver				
SD-pH	**70049**	1	0.80	0.06
SD-Pump (pH)	**70054**	1	0.80	0.06
SD-ORP	**70051**	1	0.80	0.06
SD-PPM	**70052**	1	6.00	0.051
SD-VSP	**73471**	1	0.80	0.002



70049



70054



70051



70052

SALT WATER ELECTROLYSIS - RESIDENTIAL POOLS



Smart Next

New

A salt water chlorinator with optional ph automated control.

- **New for 2021 : pH/Rx version that brings ORP control of the chlorination in addition to the pH control.**
- NN compatible: Smart control within Fluidra Connect pool automation and NN app (available on iOS & aOS).
- Smart Next is available as a Salt water chlorinator, or with regulations: pH only or pH and Redox for chlorination control.
- Equipped with a gas sensor (optional flow switch) and compact sensor holder (pH and pH/Rx options) as standard.
- Monitors temperature and salinity.
- Equipped with high quality electrodes, with a service life of up to 10 000 hours under normal conditions.
- Output control from 0 to 100%.
- pH dosing pump included with pH and pH/Rx options.

Fluidra Connect compatible

	Code	Standard Pack	Standard Weight in kg	Standard Volume in m³
Smart Next				
Up to 30 m³ 7 g/h	**70058**	1	4.80	0.047
Up to 50 m³ 12 g/h	**70060**	1	6.30	0.047
Up to 90 m³ 21 g/h	**70062**	1	8.20	0.047
Up to 140 m³ 30 g/h	**70063**	1	9.10	0.047
Up to 180 m³ 40 g/h	**70064**	1	9.50	0.047
Smart Next pH				
Up to 30 m³ 7 g/h	**70083**	1	6.20	0.047
Up to 50 m³ 12 g/h	**70084**	1	7.70	0.047
Up to 90 m³ 21 g/h	**70085**	1	9.50	0.047
Up to 140 m³ 30 g/h	**70086**	1	10.60	0.047
Up to 180 m³ 40 g/h	**70093**	1	10.90	0.047
New **Smart Next pH/Rx**				
Up to 30 m³ 7 g/h	**71692**	1	6.65	0.047
Up to 50 m³ 12 g/h	**71693**	1	8.15	0.047
Up to 90 m³ 21 g/h	**71694**	1	9.95	0.047
Up to 140 m³ 30 g/h	**71695**	1	11.05	0.047
Up to 180 m³ 40 g/h	**71696**	1	11.35	0.047
Option:				
Flow switch kit (with 50mm collar and adaptor)	**71124**	1	0.17	0.002



Energy Sel

Self-cleaning salt water chlorinator thanks to polarity reversal. Flat screen design. Easy to install and use. On / off push button located in the lower part to avoid involuntary disconnections. It is recommended for pools up to 85 m³. Relay for automatic cover. Optional flow switch (code 300227 includes D.63 collar; code 300228 includes D.50 collar).

	Chlorine output	Code	Standard Pack	Standard Weight in kg	Standard Volume in m³
Up to 40 m³	9 g/h	**71650**	1	3.50	0.025
Up to 55 m³	13 g/h	**71651**	1	3.65	0.025
Up to 85 m³	19 g/h	**71652**	1	3.70	0.025



Bering Sel

Self-cleaning salt water chlorinator thanks to polarity reversal. For pools up to 35 m³. Compact design. Manual output adjustment (from 0 to 100%).
3 indicators: solid green = running, solid red = in standby mode, flashing red = failure (lack of water, lack of salt).

	Chlorine output	Code	Standard Pack	Standard Weight in kg	Standard Volume in m³
Up to 35 m³	8 g/h	**64315**	1	6.0	-

+ info
PDB Product Database
Further information on **PRODUCTS**
www.astralpool.com

SALT WATER ELECTROLYSIS - RESIDENTIAL POOLS



E-Next

New

E-Next salt water chlorinator is able to treat pools up to 180 m³.

It automatically disinfects and lowers the chlorine production if pool is equipped with an automatic pool cover (dedicated dry contact).

The polarity reversal will help cleaning the electrodes, and its salt alarm will warn the user in case of low salt concentration to avoid damaging the cell and the pool to turn green.

	Chlorine output	Code	Standard Pack	Standard Weight in kg	Standard Volume in m³
Up to 30 m³	7 g/h	**74081**	1	4.80	0.047
Up to 50 m³	12 g/h	**74082**	1	6.30	0.047
Up to 90 m³	21 g/h	**74083**	1	8.20	0.047
Up to 140 m³	30 g/h	**74084**	1	9.10	0.047
Up to 180 m³	40 g/h	**74085**	1	9.50	0.047



Sel Clear

Self-cleaning salt water chlorinator thanks to polarity reversal. Easy to install and use. It is recommended for pools up to 85 m³. Relay for automatic cover. Optional flow switch (code 300227 includes D.63 collar; code 300228 includes D.50 collar).

	Chlorine output	Code	Standard Pack	Standard Weight in kg	Standard Volume in m³
Up to 40 m³	9 g/h	**54041**	1	3.50	0.025
Up to 55 m³	13 g/h	**54042**	1	3.65	0.025
Up to 85 m³	19 g/h	**54043**	1	3.70	0.025



Salt test kit

Salt test strips for checking salt levels. Salt levels must be checked on a regular basis as the water is renewed.

Code	Standard Pack	Standard Weight in kg	Standard Volume in m³
07937	1	0.8	0.001



Earthing anode

Easy-to-install stainless steel earthing anode to remove roaming curents that might be present with salt water. Provided with saddle clamp kit.

	Code	Standard Pack	Standard Weight in kg	Standard Volume in m³
For Ø 50 mm	**25894**	1	0.6	0.001
For Ø 63 mm	**25895**	1	0.6	0.001

SALT WATER ELECTROLYSIS - RESIDENTIAL POOLS



Standard Elite Connect electrodes

	Code	Standard Pack	Standard Weight in kg	Standard Volume in m³
Elite Connect 12 electrode (Codes 70012 / 70019 / 70031 / 70361)	**60588**	1	-	-
Elite Connect 24 electrode (Codes 70013 / 70021 / 70032 / 70363)	**60589**	1	-	-
Elite Connect 32 electrode (Codes 70014 / 70023 / 70033 / 70365)	**60594**	1	-	-
Elite Connect 42 electrode (Codes 70016 / 70025 / 70035 / 70369)	**70316**	1	-	-
Elite Connect 12 LS electrode (Codes 70037 / 70040 / 70047 / 70371)	**70317**	1	-	-
Elite Connect 24 LS electrode (Codes 70039 / 70042 / 70048 / 70372)	**70318**	1	-	-



Standard Smart Next / E-Next electrodes

	Code	Standard Pack	Standard Weight in kg	Standard Volume in m³
Smart Next 07 electrode (Codes 70058 / 70083 / 71692 / 74081)	**60595**	1	-	-
Smart Next 12 electrode (Codes 70060 / 70084 / 71693 / 74082)	**60596**	1	-	-
Smart Next 21 electrode (Codes 70062 / 70085 / 71694 / 74083)	**70312**	1	-	-
Smart Next 30 electrode (Codes 70063 / 70086 / 71695 / 74084)	**70314**	1	-	-
Smart Next 40 electrode (Codes 70064 / 70093 / 71696 / 74085)	**70315**	1	-	-



Energy Sel / Sel Clear electrodes

	Code	Standard Pack	Standard Weight in kg	Standard Volume in m³
Electrode 30: up to 40 m³	**54051**	1	0.35	0.0055
Electrode 55: up to 55 m³	**54052**	1	0.44	0.0055
Electrode 95: up to 85 m³	**54053**	1	0.50	0.0055



Bering Sel electrode

	Code	Standard Pack	Standard Weight in kg	Standard Volume in m³
Electrode: up to 35 m³	**72889**	1	0.5	0.0070

+ info
PDB Product Database
Further information on **PRODUCTS**
www.astralpool.com

AUTOMATIC UV DISINFECTION - RESIDENTIAL POOLS

Neolysis is the most advanced water treatment from AstralPool. It is a patented innovative sanitation system combining UV treatment with salt water electrolysis to deliver an unrivalled efficiency against pathogens.

Advantages:
- Water suitable for watering.
- Dual disinfection based on UV and electrolysis.
- Unbeatable water quality.
- Sustainable and healthier treatment.

Characteristics:
- The ultimate in chloramine reduction capacity (UV LP + Electrolysis).
- UV LP high quality lamps (13,000 h).
- High quality electrolysis electrodes (12,000 h).
- Patented process.





COMPATIBLE NN thing
Fluidra Connect compatible

Neolysis S (standard salinity)

Standard salinity (S) salt water chlorination systems combined with UV lamps for use in private pool up to 120 m³. Operation with standard salinity (4–6 g/L).

	Code	Standard Pack	Standard Weight in kg	Standard Volume in m³
AP NEO/S (6 Gr/l) 12 Gr/h + UV 48 W	**66126**	1	13.50	0.187
AP NEO/S (6 Gr/l) 24 Gr/h + UV 56 W	**66127**	1	14.00	0.187
AP NEO/S (6 Gr/l) 32 Gr/h + UV 56 W	**66128**	1	15.50	0.187
AP NEO/S (6 Gr/l) 12 Gr/h + UV 48 W + pH	**66129**	1	14.00	0.187
AP NEO/S (6 Gr/l) 24 Gr/h + UV 56 W + pH	**66130**	1	14.50	0.187
AP NEO/S (6 Gr/l) 32 Gr/h + UV 56 W + pH	**66138**	1	15.00	0.187
AP NEO/S (6 Gr/l) 12 Gr/h + UV 48 W + pH/ORP	**66139**	1	14.50	0.187
AP NEO/S (6 Gr/l) 24 Gr/h + UV 56 W + pH/ORP	**66140**	1	15.00	0.187
AP NEO/S (6 Gr/l) 32 Gr/h + UV 56 W + pH/ORP	**66141**	1	17.00	0.187
Optional: Connect Kit for remote control with Fluidra Connect & Go	**60363**	1	0.39	0.002





COMPATIBLE NN thing
Fluidra Connect compatible

Neolysis LS (low salinity)

No need to add any extra salt. Natural conductivity in the operating range of 1.5–3 g/L depending on the temperature (28–35 ºC) and nominal output (80–100%).

	Code	Standard Pack	Standard Weight in kg	Standard Volume in m³
AP NEO 12 Gr/h + UV 48 W	**57744**	1	13.50	0.187
AP NEO 24 Gr/h + UV 56 W	**57745**	1	14.00	0.187
AP NEO 32 Gr/h + UV 56 W	**57746**	1	15.50	0.187
AP NEO 12 Gr/h + UV 48 W + pH	**57747**	1	14.00	0.187
AP NEO 24 Gr/h + UV 56 W + pH	**57748**	1	14.50	0.187
AP NEO 32 Gr/h + UV 56 W + pH	**57749**	1	16.50	0.187
AP NEO 12 Gr/h + UV 48 W + pH/ORP	**57750**	1	14.50	0.187
AP NEO 24 Gr/h + UV 56 W + pH/ORP	**57751**	1	15.00	0.187
AP NEO 32 Gr/h + UV 56 W + pH/ORP	**57752**	1	17.00	0.187
Optional: Connect Kit for remote control with Fluidra Connect & Go	**60363**	1	0.39	0.002

AUTOMATIC UV DISINFECTION - RESIDENTIAL POOLS

Lamps for the Neolysis system in private pools



	Code	Standard Pack	Standard Weight in kg	Standard Volume in m³
48-W UV LP-10 lamps (Codes 57744, 57747, 57750, 66126, 66129, 66139)	**60559**	1	0.10	0.016
56-W UV LP-14 lamps (Codes 57745, 57746, 57748, 57749, 57751, 57752, 66127, 66128, 66130, 66138, 66140 and 66141)	**60606**	1	0.12	0.016
UV LP-10/14 quartz	**60607**	1	0.08	-

Neolysis electrodes for private pools



	Code	Standard Pack	Standard Weight in kg	Standard Volume in m³
12 gr/h Neolysis electrode (Codes 57744, 57747, 57750)	**61116**	1	0.88	0.064
24 gr/h Neolysis electrode (Codes 57745, 57748, 57751)	**61117**	1	1.15	0.064
32 gr/h Neolysis electrode (Codes 57746, 57749, 57752)	**61118**	1	1.85	0.064
12 gr/h Neolysis-S (6 gr/l) electrode (Codes 66126, 66129, 66139)	**67807**	1	0.70	0.064
24 gr/h Neolysis-S (6 gr/l) electrode (Codes 66127, 66130, 66140)	**67808**	1	1.00	0.064
32 gr/h Neolysis-S (6 gr/l) electrode (Codes 66128, 66138, 66141)	**67809**	1	1.70	0.064

Heliox UV LP systems (LP = Low Pressure) systems are designed to be used in residential pools. They work on a wavelength of 254 nm, which is ideal for removing microorganisms. They will enable you to benefit from the latest ultraviolet light technology in the field of water treatment.

Heliox UV LP features:

- Stainless steel and polyethylene versions.
- Double lamp version (LP30 and LP30+).
- Plastic injection power box.
- Fluidra technology (design and manufacturing).
- Lamp "ON" indicator.
- Electronic counter for working time and ignitions (lamp lifetime control).
- Flow switch (optional, included in LP+ versions).
- LP+ versions come with a built-in pH/ORP controller (complete package).
- LP+ versions come with a flow switch, pH/ORP sensors and sensor holder (dosing pumps not included).

Heliox UV LP S.S. (Stainless Steel)



	Code	Standard Pack	Standard Weight in kg	Standard Volume in m³
Heliox UV LP 10	**52206**	1	11.80	0.153
Heliox UV LP 14	**52207**	1	12.00	0.153
Heliox UV LP 25	**52208**	1	15.00	0.187
Heliox UV LP 30	**52209**	1	15.60	0.187
Version with pH/ORP Control (LP+):				
Heliox UV LP 10 +	**52210**	1	12.10	0.153
Heliox UV LP 14 +	**52211**	1	12.40	0.153
Heliox UV LP 25 +	**52212**	1	16.00	0.187
Heliox UV LP 30 +	**52213**	1	16.50	0.187

+ info PDB Product Database
Further information on **PRODUCTS**
www.astralpool.com

AUTOMATIC UV DISINFECTION - RESIDENTIAL POOLS



Heliox UV LP PE (PolyEthylene)

	Code	Standard Pack	Standard Weight in kg	Standard Volume in m³
Heliox UV LP P10	**52214**	1	7.90	0.153
Heliox UV LP P14	**52215**	1	8.10	0.153
Heliox UV LP P20	**52216**	1	9.20	0.187
Heliox UV LP P25	**52217**	1	9.60	0.187
Version with pH/ORP Control (LP+):				
Heliox UV LP P10 +	**52218**	1	8.10	0.153
Heliox UV LP P14 +	**52219**	1	8.30	0.153
Heliox UV LP P20 +	**52220**	1	10.80	0.187
Heliox UV LP P25 +	**52221**	1	11.15	0.187

Material	Code	Model	Code	Model	Flow rate (30 mJ/cm²)	Nº lamps	Rated / UV-C power	Total height (mm)	Ø reactor
Stainless steel	**52206**	UV LP 10	**52210**	UV LP 10+	10 m³/h	1	48 / 13 W	790	204
Stainless steel	**52207**	UV LP 14	**52211**	UV LP 14+	14 m³/h	1	56 / 18 W	790	204
Stainless steel	**52208**	UV LP 25	**52212**	UV LP 25+	25 m³/h	1	90 / 30 W	1033	204
Stainless steel	**52209**	UV LP 30	**52213**	UV LP 30+	30 m³/h	2	2 x 75 / 2 x 25 W	1033	204
PE	**52214**	UV LP P10	**52218**	UV LP P10+	10 m³/h	1	48 / 13 W	735	200
PE	**52215**	UV LP P14	**52219**	UV LP P14+	14 m³/h	1	56 / 18 W	735	200
PE	**52216**	UV LP P20	**52220**	UV LP P20+	20 m³/h	1	75 / 25 W	978	200
PE	**52217**	UV LP P25	**52221**	UV LP P25+	25 m³/h	1	90 / 30 W	978	200

Heliox UV LP lamps



	Code	Standard Pack	Standard Weight in kg	Standard Volume in m³
48-W UV LP-10 lamps (Codes 52206, 52210, 52214, 52218)	**60559**	1	0.10	0.016
56-W UV LP-14 lamps (Codes 52207, 52211, 52215, 52219)	**60606**	1	0.12	0.016
75-W UV LP-20 lamp (Codes 52216, 52220)	**60608**	1	0.20	0.022
90-W UV LP-25 lamp (Codes 52208, 52212, 52217, 52221)	**60609**	1	0.12	0.022
Kit of 2 x 75-W UV LP replacement lamps (Codes 52209, 52213)	**60637**	1	0.24	0.045
UV LP-10/14 quartz (lamps 48 W and 56 W)	**60606**	1	0.08	0.016
UV LP-20/25/30 quartz (lamps 75 W and 90 W)	**60631**	1	0.09	0.022

AUTOMATIC UV DISINFECTION - RESIDENTIAL POOLS





UV-C TL

The Astral UV-C TL ensures that your pool water is kept clean, fresh and crystal clear at all times in the most efficient, environmentally friendly way possible. Easy to install and maintain. It has a built-in electronic ballast for running the power pack without problems. In addition, the stainless steel reactor reflects UV-C rays, thus increasing efficiency by as much as 35%. The 30 and 55 Watt versions have a single lamp, whilst the 110-Watt version has two 55-Watt lamps in dual housing to increase contact time. Max. pressure: 2 bar. Comes with 3 connections (one closed with a blind cover) for easy installation. Also includes adaptors from Ø 63 mm to Ø 50 mm, with 1½ " female thread. The reactor must be wired to earth.

	Code	Standard Pack	Standard Weight in kg	Standard Volume in m^3
Astral UVC-30W TL	**71427**	1	-	-
Astral UVC-55W TL	**71428**	1	-	-
Astral UVC-110W TL	**71429**	1	-	-

Code	Flow rate of 30 mJ/cm^2	Max. flow rate m^3/h	Watt	Connection	Reactor material	Lamp service life
71427	8 m^3/h	23	30	63/50/1.5"	316L	9000 h
71428	13 m^3/h	23	55	63/50/1.5"	316L	9000 h
71429	20 m^3/h	23	110 (2 x 55)	63/50/1.5"	316L	9000 h



UV-C PE

AstralPool high quality UV-C PE in 30 and 55 Watt. The unit has a reactor that is big in diameter to increase exposure time to UV-C radiation. You pool water will be disinfected efficiently and safely. The units have rubber side caps that are splash-proof so that the lamp can be changed quickly. The unit can also be assembled in the opposite direction. It is therefore possible to choose the position of the input and output (left and right). The UV-C unit has a full PE reactor, which makes the device perfectly suited for pools with a salt chlorinator or salt water. The input has two 1½ " female threaded connections. The rest of the opening will be used for the transparent plug supplied as the lamp's indicator. The UV-C unit comes with 25/32/40 mm hoses. The reactor must be wired to earth.

	Code	Standard Pack	Standard Weight in kg	Standard Volume in m^3
Astral UV-C PE 30W	**71398**	1	-	-
Astral UV-C PE 55W	**71399**	1	-	-

Code	Flow rate of 30 mJ/cm^2	Max. flow rate m^3/h	Watt	Connection	Reactor material	Lamp service life
71398	13.5 m^3/h	20	30	1 ½" fem. Thr.	PE	9000 h
71399	18 m^3/h	20	55	1 ½" fem. Thr.	PE	9000 h

+ info
PDB Product Database
Further information on **PRODUCTS**
www.astralpool.com

PH & CHLORINE AUTOMATIC REGULATIONS - RESIDENTIAL POOLS



Control Connect

A fully automated multi-parameters control unit for a balanced and disinfected swimming pool.

A range of models suitables to different needs with either pH & ORP automatic regulations and dosing or pH & PPM free chlorine automatic regulations.

- Connected product using built-in Ethernet port and PoolStation app (available on iOS & aOS).
- NN compatible: Smart control within Fluidra Connect pool automation and NN app (available on iOS & aOS).
- Available in stand-alone version (code 71537) or in a complete panel version with low flow chamber (codes 71538 & 71539).
- 2.8'' TFT colour touchscreen.
- 4 digital inputs and 4 digital outputs (relays) to control the filter pump, heat pump, lighting, refill system, etc.
- Water temperature reading as standard.
- Equipped with a flow switch as standard.
- Equipped with dedicated outputs for pH & chlorine dosing pumps.
- pH and chlorine dosing pumps NOT included to give maximum flexibility depending on pool type. Kit 70054 can be used (1.5 L/h peristaltic pumps).

Fluidra Connect compatible

PoolStation
Embedded System

Modbus







71537

pH/ORP/Temp.
stand-alone



71538

pH/ORP/Temp.
complete panel



71539

pH/PPM/Temp.
complete panel

	Code	Standard Pack	Standard Weight in kg	Standard Volume in m³
pH / ORP / Temp. stand-alone	**71537**	1	5.85	0.047
pH / ORP / Temp. complete panel	**71538**	1	6.85	0.079
pH / PPM / Temp. complete panel	**71539**	1	6.85	0.079



Power & Control cabinet - Elite Connect & Control Connect

New

Pre-wired cabinet that facilitates the installation between Elite Connect or Control connect and the pool equipment that can be controlled using 4 power outputs (filter pump, heater, lighting, etc.). See Elite Connect on page 216.

- IP55 watertight casing.
- All outputs are protected by a fuse.
- Control features :
  1 x 230 Vac output for :
  - Filter pump up to 3 HP
  - Or any device up to 10A / 2.3 kW
  3 x 230 Vac outputs for :
  - Filter pump up to 1/3 HP
  - Any device up to 6.5A / 1.5 kW

	Code	Standard Pack	Standard Weight in kg	Standard Volume in m³
Power & Control cabinet - Type A	**72454**	1	9.5	-

Check sensors and installation kit on page 227

PH & CHLORINE AUTOMATIC REGULATIONS - RESIDENTIAL POOLS



Control Basic Plus

Small in size, it has been designed to prevent siphoning, require little maintenance, be easy to install and is protected from the spraying of chemical products. The device automatically measures and checks a pool's pH or ORP level.

Supplied without sensors or calibration solutions. Installation kit included.

- Plastic housing with IP-65 protection rating
- Backlit LCD display comprising 2 lines and 16 characters.
- Self-calibration of sensors.
- Quality control of sensors.
- Dosing pause during alarms and notification by a blinking LED.
- Proportional dosing.
- Adjustable set point.
- Flow rate: 1,5 l/h or 5 l/h.
- Back pressure: 1.5 bar.
- pH measurement range: 0.00 to 14.00.
- Redox measurement range: -999 to + 999 mV.
- Switch.
- Alarm relay.
- Minimum chemical product level input.
- PT100 temperature inlet (optional sensor).

Fluidra Connect compatible

See the sensors and the installation kit on page 227

	Code	Standard Pack	Standard Weight in kg	Standard Volume in m³
Control Basic 1,5 l/h	**66159**	1	2.2	0.01
Control Basic 5,0 l/h	**66160**	1	2.2	0.01
pH sensor with calibration solutions	**36004**	1	0.4	0.001
Redox sensor with calibration solutions	**36005**	1	0.3	0.001
Optional				
PT100 sensor	**66758**	-	-	-
Flange for PT100	**66759**	-	-	-



Redox Basic EV Plus

Small in size, it has been designed to prevent siphoning, require little maintenance, be easy to install and is protected from the spraying of chemical products. Recommended for use with any chlorinator without ORP regulation.

Supplied without sensors or calibration solutions. Installation kit included.

- Plastic housing with IP-65 protection rating
- Backlit LCD display comprising 2 lines and 16 characters.
- Self-calibration of sensors.
- Quality control of sensors.
- Dosing pause during alarms and notification by a blinking LED.
- Proportional dosing.
- Adjustable set point.
- Redox measurement range: -999 to + 999 mV.
- Switch.
- Alarm relay.
- Output relay for external component.
- Minimum chemical product level input.
- PT100 temperature input (optional sensor).

Fluidra Connect compatible

See the sensors and the installation kit on page 227

	Code	Standard Pack	Standard Weight in kg	Standard Volume in m³
Redox Basic EV Plus Sensor not included	**66161**	1	2.1	0.01
Redox sensor with calibration solutions	**36005**	1	0.3	0.001
Optional				
PT100 sensor	**66758**	-	-	-
Flange for PT100	**66759**	-	-	-

+ info
PDB Product Database
Check sensors and installation kit on page 227

PH & CHLORINE AUTOMATIC REGULATIONS - RESIDENTIAL POOLS



Dual pH-EV Basic Control Plus

The DUAL pH-EV Basic Control Plus dosing device has been specifically designed for automatically controlling pH and ORP levels.

It is a must in home spas and pools. It can work with a salt chlorinator or chlorine tablets, as it has relay output for enabling the chlorinator, in addition to controlling a pool's pH levels though a peristaltic pump.

Small in size, it comes with all of the components required for proper installation.

Depending on the device that has been connected, the control function can be set to the ON-OFF setting or proportional setting (ideal for solenoid valves).

COMPATIBLE NN thing

Fluidra Connect compatible

General technical features

- Automatic pH or redox control and dosing system.
- Measurement range of 0–14 (pH) and 0–100 mV (redox).
- Includes full installation kit comprising a pH and Redox sensor, sensor holder, standard solutions, suction and blow pipes and suction- and blow-pipe fittings.
- ABS casing with IP65 protection rating.
- Digital screen that gives pH, redox (ORP) and temperature (optional Pt100) readings
- Remote on-off input (230 VAC) that keeps display lit up for calibration and programming.
- Chemical product level inlet.
- Alarm relay.

	Code	Standard Pack	Standard Weight in kg	Standard Volume in m^3
Dual pH-EV Basic Control 1.5 l/h compatible with Fluidra Connect (includes sensors)	**66180**	1	-	-
SPA pH-EV 0.4 l/h Dual Basic Control compatible with Fluidra Connect (includes sensors)	**66181**	1	-	-
Optional				
PT100 sensor	**66758**	-	-	-
Flange for PT100	**66759**	-	-	-



Control Basic Next

The Control Basic Next device has been specifically designed for the automatic control of pH and redox levels. It can be set to control whichever of these two functionalities is required.

It is the most simple control and dosing device in the market. Small in size, it has all of the components required for immediate installation.

General technical features

- Automatic pH or redox control and dosing system.
- Measurement range of 0–14 (pH) and 0–100 mV (redox).
- It comes with a full installation kit, made up of a pH or redox sensor (depending on the model), a sensor holder, standard solutions, suction and blow pipes, and suction and blow pipe fittings.
- ABS casing with IP65 protection rating.
- Digital display screen for both pH and redox readings.
- Remote on-off input (230 VAC) that keeps display lit up for calibration and programming.

See the sensors and the installation kit on page 227

	Code	Standard Pack	Standard Weight in kg	Standard Volume in m^3
Control Basic pH 1.5 l/h NEXT (pH sensor included)	**66162**	1	-	-
Control Basic pH 3 l/h NEXT (pH sensor included)	**66336**	1	-	-
Control Basic ORP 1.5 l/h NEXT (ORP sensor included)	**66163**	1	-	-
Control Basic ORP 3 l/h NEXT (ORP sensor included)	**66337**	1	-	-
Control Basic pH 0.4 l/h NEXT SPA (pH sensor included)	**66156**	1	-	-
Control Basic ORP 0,4 l/h NEXT SPA (ORP sensor included)	**66157**	1	-	-

PH & CHLORINE AUTOMATIC REGULATIONS - RESIDENTIAL POOLS



Redox Basic EV Next

The Redox Basic EV Next device has been specifically designed for automatically controlling ORP levels. It is the most simple control and dosing device in the market. Small in size, it has all of the components required for immediate installation.

It can work with a salt chlorinator, a simple dosing pup or even chlorine tablets thanks to its relay output automatically enabling the sanitation feature when needed.

General technical features

- Automatic redox control and dosing system.
- Measurement range of 0...1000 mV.
- It comes with basic installation kit, made of an ORP sensor, a sensor holder and standard buffer solution (no piping kit as device is made to control a separate sanitizer appliance).
- ABS casing with IP65 protection rating.
- Digital screen that gives redox readings.
- Remote on-off input (230 VAC) that keeps display lit up for calibration and programming.

	Code	Standard Pack	Standard Weight in kg	Standard Volume in m^3
Redox Basic EV Next Includes redox sensor	**66174**	1	-	-

Installation kit					
Control Basic Next	•	•	•	•	•
Redox Basic EV next				•	•

Sensors				
pH sensor with calibration solutions (Code: 36004)	•		•	
Redox sensor with calibration solutions (Code: 36005)		•		•

+ info
PDB Product Database
Further information on **PRODUCTS**
www.astralpool.com

DOSING PUMPS FOR RESIDENTIAL POOLS

Optima dosing pump

The OPTIMA dosing pump represents the development of more than 30 years of experience in the automatic dosing field. This series reduces the number of pumps required to meet the various dosing needs.

The OPTIMA dosing pump series, with its power supply technology from 90, VCA to 265 VCA and at 50-60 Hz, ensures a precision and reliability never seen before.

Integration of many functions due to its simple programming, an alphanumeric display, the possibility of multilingual programming of the menu and a technology which permit controlled flow rate and back pressure. Allows to use the same model for various applications providing a great versatility.

Systems manufactured in compliance with EC standards. IP5 protection. 90-265V AC 50/60 Hz power supply. Components in contact with chemicals are made of polypropylene, Viton, Teflon and PVC. (Other materials are available if made to order.) Acid-resistant casing. Moisture-resistant membrane push buttons. Built-in purge valve. No lubrication and little maintenance work required. Sensors and calibration solutions not included. Also available with a peristaltic pump (see page 230).

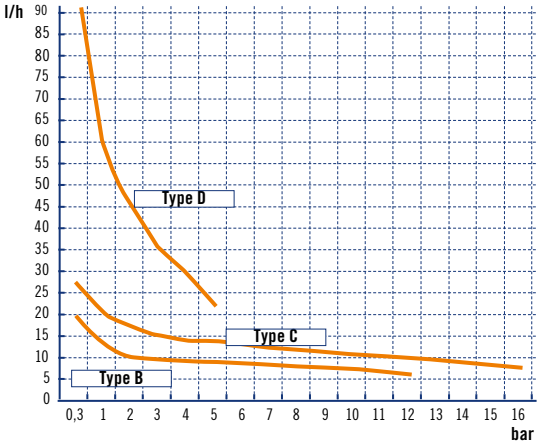

Sensors				
pH sensor with calibration solutions (Code: 36004)	•		•	
Redox sensor with calibration solutions (Code: 36005)		•		•



OPTIMA constant flow rate analogue dosing pump

In OPTIMA constant flow rate analogue dosing pumps, the flow rate can be set as a percentage using the potentiometer under the front panel, which modifies the pump's operation frequency.
The pumps in this range have an level inlet sensor.

Double scale adjustment: the maximum dosing frequency can be divided into 5. This double scale allows users to have two pumps with a single unit.

Power supply from 90 to 230 VCA at 50-60 Hz with plug and switch

	Code	Standard Pack	Standard Weight in kg	Standard Volume in m^3
Adjustable manual Optima pump				
B-type pump of5–10 bar and 2–5 l/h	**57132**	1	3.5	0.01
C-type pump of 5 bar and 10 l/h	**57133**	1	4.5	0.01
D-type pump of 5 bar and 120 l/h	**57135**	1	4.5	0.01



OPTIMA NEXT constant flow rate analogue dosing pump

The flow rate is fully adjustable from the flow meter. Power supply from 90 to 230 VCA at 50-60 Hz without plug.

	Code	Standard Pack	Standard Weight in kg	Standard Volume in m^3
Adjustable Optima manual pump at 8 bar and 5 l/h	**66164**	1	-	-

See the sensors on page 228

DOSING PUMPS FOR RESIDENTIAL POOLS



OPTIMA proportional and volumetric dosing pump

OPTIMA pumps provide all the functions of proportional dosing in a single model.

Features:
- Proportional with analogue signals 4 - 20 mA.
- Proportional with digital signals and the possibility of:
  - Multiplying the input impulses (1:n)
  - Dividing the input impulses (n:1)
  - Function in ppm
  - The pump has a memory function for processing input impulses dosing
- Level alarm with pump disconnection.
- Maximum dosing flow rate to prevent overdosing.
- Password for protecting programmed data
- Possibility of alarm connection
- Power supply from 90 to 265 VCA at 50-60 Hz with plug

	Code	Standard Pack	Standard Weight in kg	Standard Volume in m^3
Type B Model 7-10 bar and 5 litres	**57136**	1	3.5	0.01
Type C Model 5 bar and 10 litres	**57137**	1	4.5	0.01
Type D Model 5 bar and 20 litres	**57138**	1	4.5	0.01



OPTIMA NEXT proportional and volumetric dosing pump

OPTIMA pumps provide all the functions of proportional dosing in a single model.

Features:
- Proportional with analogue signals 4 - 20 mA.
- Reading of pulses/minute.
- Chemical product minimum level inlet.
- pulse entry for dosing proportional from pulse emitter counter.
- Remote start/stop.
- Power supply from 90 to 265 VCA at 50-60 Hz without plug.

	Code	Standard Pack	Standard Weight in kg	Standard Volume in m^3
Model 8 bar and 5 litres	**66165**	1	-	-



OPTIMA PLUS dosing pump with pH or redox tester

OPTIMA dosing pump with built-in pH/Redox control. pH/Redox instrument.
Automatic calibration: Calibration by simply pressing a button, with the possibility of controlling the level of sensor efficiency.

Features:
- 90-265 VAC 50/60 Hz power supply
- Manual temperature compensation for pH or optionally automatic via Pt100.
- 4...20mA output for printed register or transmission of the reading.
- Level alarm with pump disconnection or simple warning of lack of product by means of the alarm relay.
- Alarm notifying deactivation of the programmable setpoint across whole of the measurement range.
- Dosing delay time to stop the dosing pump from injecting product in event of sensor malfunction.
- Maximum dosing pump flow rate for preventing overdosing.
- Password for protecting programmed data.
- Possibility of alarm connection.

Fluidra Connect compatible

	Code	Standard Pack	Standard Weight in kg	Standard Volume in m^3
Type C Optima Redox/pH control dosing pump (10 bar and 5 l/h and 5 bar and 10 l/h)	**66179**	1	4.5	0.01
pH sensor with calibration solutions	**36004**	1	0.4	0.001
Redox sensor with calibration solutions	**36005**	1	0.3	0.001
Optional				
PT100 sensor	**66758**	-	-	-
Flange for PT100	**66759**	-	-	-

Sensor not included (see kits on page 228)

Sensor holder not included (code 01306)

+ info
PDB Product Database
Further information on **PRODUCTS**
www.astralpool.com

DOSING PUMPS FOR RESIDENTIAL POOLS



Sensor not included
(see kits on page 228)
Sensor holder not included
(code 01306)

OPTIMA NEXT dosing pump with pH or redox tester

OPTIMA dosing pump with built-in pH/Redox control instrument.
Automatic calibration by simply pressing a button, with the possibility of controlling the degree of sensor efficiency.

Features:
- Power supply from 90 to 265 VCA at 50-60 Hz without plug
- Manual temperature adjustment for pH or optional automatic adjustment with PT100 (sensor not included).
- Level control input.
- Remote off control.

	Code	Standard Pack	Standard Weight in kg	Standard Volume in m³
Optima Next dosing pump redox control/pH control at 8 bar and 5 l/h	**66166**	1	-	-
pH sensor with calibration solutions	**36004**	1	0.4	0.001
Redox sensor with calibration solutions	**36005**	1	0.3	0.001



Bracket for mounting above tank

Optional support for mounting the OPTIMA series and pH Basic horizontally; for example, above chemical solution tanks.

	Code	Standard Pack	Standard Weight in kg	Standard Volume in m³
	36830	1	0.1	0.002



Peristaltic dosing pumps

90/260V 50/60 Hz electrical connection.

The installation kit includes:
- Transparent glass-type flexible 2-m PVC suction pipe.
- Semi-rigid white polyethylene 2-m return pipe.
- 3/8" BSP m. injection valve.
- Pool floor filter.

	Code	Standard Pack	Standard Weight in kg	Standard Volume in m³
Peristaltic pump 4 l/h (3 bar)	**57179**	1	-	-
Peristaltic pump 12 l/h (1 bar)	**57178**	1	-	-



Polyethylene cylindrical tanks

To hold chemicals for dosage pumps.

	Code	Standard Pack	Standard Weight in kg	Standard Volume in m³
Capacity: 125 l	**01314**	1	4.5	0.120
Capacity: 250 l	**01315**	1	10.0	0.390
Capacity: 350 l	**01316**	1	14.0	0.510
Capacity: 500 l	**01317**	1	21.5	0.760
Capacity: 1000 l	**28831**	1	-	-



Manual stirrer

For Polyethylene tanks.

	Code	Standard Pack	Standard Weight in kg	Standard Volume in m³
Length 60 cm	**01318**	1	0.5	0.010
Length 90 cm	**01319**	1	1.2	0.020

DOSING EQUIPMENT

Floating dispenser



36620 69668



38630 38629

Allows for dosing and easy chemical product handling in the pool.

	Code	Standard Pack	Standard Weight in kg	Standard Volume in m³
Shark Series				
Floating dispenser for 200 g tablets	**36620**	12	8.0	0.14
Blue Line				
Dispenser with tablet level indicator	**69668**	12	3.8	0.067
Basic Line				
Floating dispenser for 200 g tablets	**38630**	12	4.0	0.079
Floating dispenser for 20 g tablets	**38629**	12	4.0	0.030

Dossi-5 in-line and Dossi-10 in-line bromine feeders



Bromine dispenser. Manufactured from unalterable plastic materials (ABS). With regulation valve, manual purge, Venturi automatic depression purge, and opening key. For pools up to 45 m³ with the Dossi-5 dispenser and up to 90 m³ Dossi-10 dispenser. Connections 1½". Ø 200 mm.

	Code	Standard Pack	Standard Weight in kg	Standard Volume in m³
Dossi-5 in-line. Height 486 mm. Approximate capacity: 5 kg of tablets	**21438**	1	3.7	0.031
Dossi-10 in-line. Height 725 mm. Approximate capacity: 10 kg of tablets	**21439**	1	4.8	0.049

Chlorine and bromine feeder Dossi-5 and Dossi-10 off-line



Bromine and chlorine feeder. Manufactured from unalterable plastic materials (ABS). Approximate capacity: 5 kg of tablets for Dossi-5 and 10 kg for Dossi-10. Supplied with two valves in order to stop the water flow. Height 486 mm and Ø 200 mm. Connections Ø 20 mm.

	Code	Standard Pack	Standard Weight in kg	Standard Volume in m³
Dossi-5 off-line For pools up to 100 m³	**01413**	1	3.7	0.031
Dossi-10 off-line For pools up to 200 m³	**43998**	1	4.86	0.048

	Volume of chlorine-treated pools	Volume of bromine-treated pools
Dossi 5	20 m³ - 80 m³	4 m³ - 50 m³
Dossi 10	20 m³ - 160 m³	4 m³ - 100 m³

+ info PDB Product Database
Further information on **PRODUCTS**
www.astralpool.com

DOSING EQUIPMENT



3.5 kg Dossi-3 chlorine and bromine feeder

Chlorine and bromine feeder. Manufactured from unalterable plastic materials (ABS). Approximate capacity: 3.5 kg of tablets. Lid closing with double safety system. Easy to operate regulation valves. For pools up to 60 m³ with Chlorine and up to 30 m³ with bromine. Height: 405 mm.

	Code	Standard Pack	Standard Weight in kg	Standard Volume in m³
Dossi-3, in-line For direct connection to pipework With 1½" connectors	**24429**	1	1.81	0.03
Dossi-3 off-line For by-pass connection with flexible tube	**24430**	1	1.90	0.031

Code 24429 IN-LINE

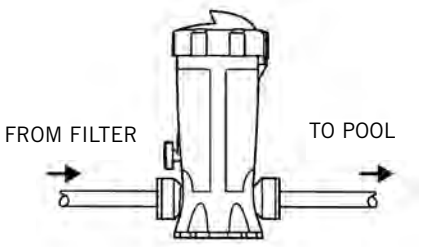

Code 24430 OFF-LINE

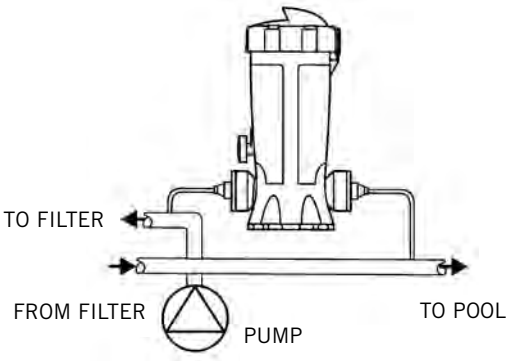

DOSING EQUIPMENT

INSTALLATION DIAGRAM OF CHLORINE/BROMINE DOSING UNITS AND AUTOMATIC REGULATING AND CONTROL EQUIPMENT

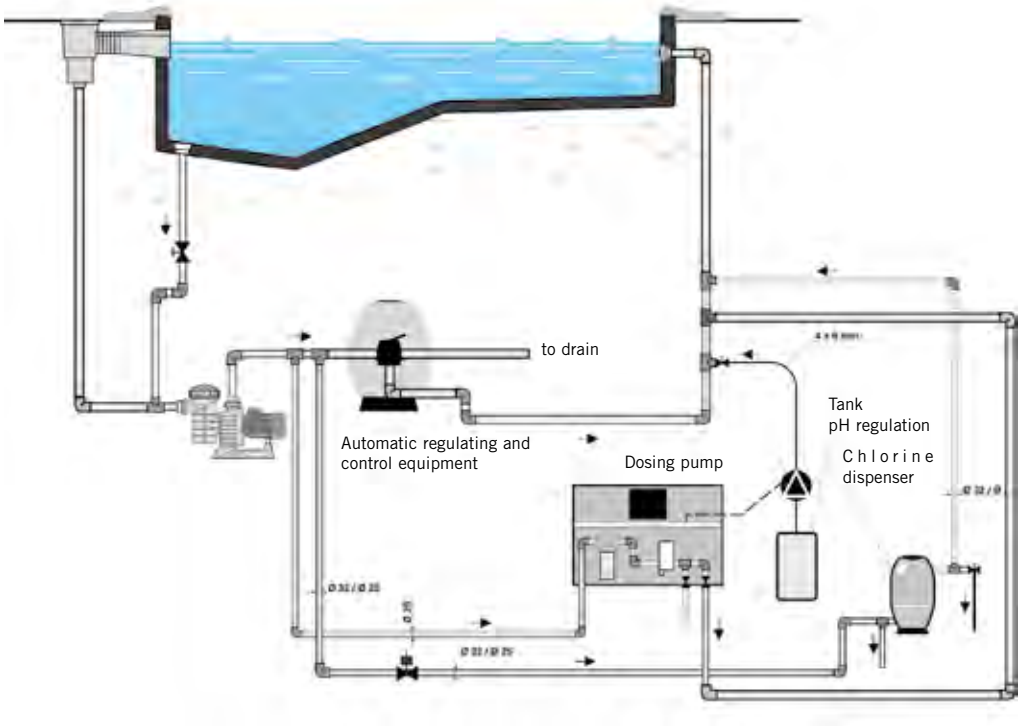



Compact dosage tank

Trichlor and bromine tablet dosage unit with automatic safety valve. Made out of fibreglass and polyester.

	Code	Standard Pack	Standard Weight in kg	Standard Volume in m³
Compact dosage tank 40 l Trichlor (for pools from 200 to 500 m³) Bromine (for pools from 150 to 300 m³)	**16631**	1	15	0.134
Compact dosage tank 60 l Trichlor (for pools from 500 to 1000 m³) Bromine (for pools from 300 to 450 m³)	**16632**	1	18	0.190



Degassing valve kit

Degassing valve, with a spring. Opening pressure 2.5 to 3.5 bar (Kg/cm²). For Chlorimax filters.

	Code	Standard Pack	Standard Weight in kg	Standard Volume in m³
For 40 l dosage tank	**16633**	1	0.4	0.002
For 60 l dosage tank	**16634**	1	0.4	0.002

+ info PDB Product Database
Further information on **PRODUCTS**
www.astralpool.com

WATER METERS & CONTROL DEVICES



Woltman type turbine meters

Woltman type axial turbine water meter, with numerical counter readout, and numbered drums. Dry dial with magnetic transmission. Easily removable gearwork and turbine. Pre-set for pulse emission. IP-68 protection level. CYBLE type pulse emission.

	Code	Standard Pack	Standard Weight in kg	Standard Volume in m^3
2" gauge - 50 mm	**20430**	1	12.0	0.004
2½" gauge - 65 mm	**20431**	1	13.6	0.004
3" gauge - 80 mm	**20432**	1	14.6	0.004
4" gauge - 100 mm	**20433**	1	20.0	0.006
5" gauge - 125 mm	**20434**	1	30.0	-
6" gauge - 150 mm	**20435**	1	36.0	0.009
8" gauge - 200 mm	**20436**	1	55.0	0.012
CYBLE type emitter K= 1 l/pulse	**23235**	1	-	-
CYBLE type emitter K= 10 l/pulse	**23235-0010**	1	-	-
CYBLE type emitter K= 100 l/pulse	**23235-0100**	1	-	-



Electrically driven plastic valves - Nylon

Threaded connection. Manually operated ON position Flow regulator. Stainless Steel AISI-302 spring. Maximum working pressure = 10 atm.

	Code	Standard Pack	Standard Weight in kg	Standard Volume in m^3
1½" connections	**09392**	1	0.5	-
2" connections	**56116**	1	0.7	-
3" connections	**57641**	1	1.1	-

MODELS	09392	56116	57641
Connection	1½"	2"	3"
Min. pressure kg/cm^2	1	1	1
Max. pressure kg/cm^2	10	10	10
Maximum flow m^3/h	30	40	60

Pressure and flow diagrams

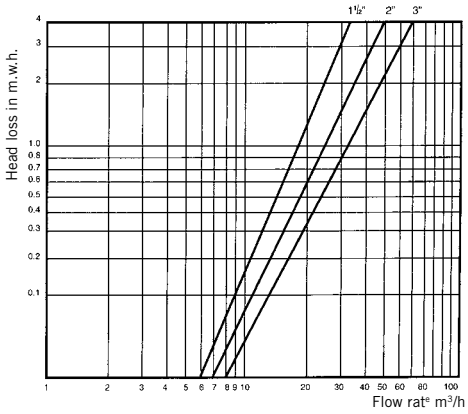



24 Volt solenoids

To install in electric valves with code 09392, 06935 and 06936.

	Code	Standard Pack	Standard Weight in kg	Standard Volume in m^3
	09393	1	-	-

WATER METERS & CONTROL DEVICES

BALANCE TANK INSTALLING DIAGRAM

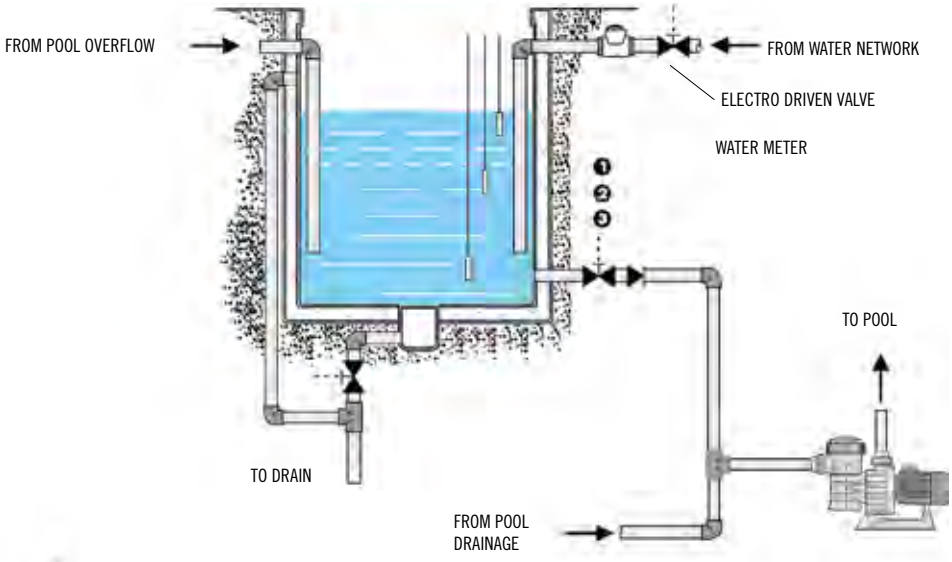

1. Maximum water level signal in BALANCE TANK for starting the pumping system
2. Minimum water level signal in POOL for opening the electrically operated valve for make-up water.
3. Minimum level signal in BALANCE TANK for shutting down the pumping system.

Electronic operating panel for overflow pool balance tank

For overflow pool. Water level sensor with 2 m cable.

For 2 water levels control panel:

* Minimum safety level for pump operation: The pump stops working if water level doesn't have the minimum set level.
* Top-up level, whereby a signal is sent to the solenoid valve to top up the level of water in the pool. Signal to the valve at 220 V II and 24 V II.

	Code	Standard Pack	Standard Weight in kg	Standard Volume in m^3
	12061	1	-	-

3 water level control panel:

* Minimum safety level for pump operation: The pump stops working if water level reaches the minimum set level.
* Water make up level: Gives the solenoid water inlet valve, the opening signal to keep correct water level in balance tank. Solenoid valve signal in 220 V II & 24 V II.
* Forced start-up, so that the pump unit starts up when the balance tank overflows due to a burst pipe or non-return valve failure.

	Code	Standard Pack	Standard Weight in kg	Standard Volume in m^3
Dual frequency (50/60 Hz)	**12062**	1	-	-





CLEANING EQUIPMENT

238 • Pool cleaner accessories
238 • Suction automatic pool cleaners
239 • Manual pool cleaners - Blue Line Range
241 • Manual pool cleaners - Shark Range
242 • Manual pool cleaners - Classic Range
245 • Net'n'Clean Integrated Cleaning System
247 • Hoses

ASTRALPOOL

POOL CLEANER ACCESSORIES



Pump caddy for stand-alone pool cleaners

Made of anodized aluminium tube and a 460 mm x 370 mm plastic platform. Face plate in AISI-304 stainless steel.

Code	Standard Pack	Standard Weight in kg	Standard Volume in m^3
04648	1	8.06	0.12

SUCTION AUTOMATIC POOL CLEANERS



Splasher

Splasher is an hydraulic suction cleaner. It's using the pool filtration system to work and collect the debris in the pump pre-filter.

It is simply connected to the skimmer vacuum plate and works at the same time than the pool filtration.

Its membrane system ensures an optimum and quieter performance.

Cleaning areas: floor and walls.
Pool floors types: flat or gentle slopes.
Pool size: up to 9m length.
Filter pump minimum required pressure: 1/2 HP.
Included in pack : 9,6m hose.

	Code	Standard Pack	Standard Weight in kg	Standard Volume in m^3
Splasher suction cleaner	**66281**	1	5.6	0.05



Mamba

Mamba is an hydraulic suction cleaner. It's using the pool filtration system to work and collect the debris in the pump pre-filter.

It is simply connected to the skimmer vacuum plate and works at the same time than the pool filtration.

The Mamba's dual suction design ensures the pump and filter are never starved of water. The adjustable bypass valve allows for operation from small to large capacity filtration pumps.

Cleaning areas: floor and walls.
Pool floors types: flat or gentle slopes.
Pool size: up to 9m length.
Filter pump minimum required pressure: 1/2 HP.
Included in pack : 12 x 80 cm hose sections, flow regulator, universal adapter.

	Code	Standard Pack	Standard Weight in kg	Standard Volume in m^3
Mamba suction cleaner	**60092**	1	7	0.061

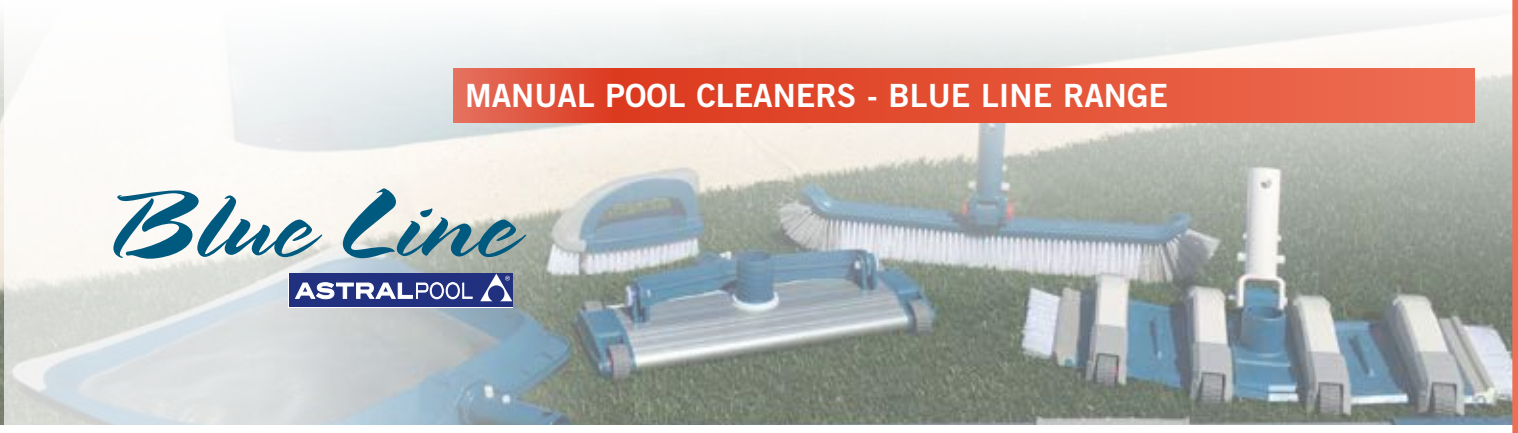

MANUAL POOL CLEANERS - BLUE LINE RANGE



69661

Blue Line manual suction cleaner - wing-nut fastening

	Code	Standard Pack	Standard Weight in kg	Standard Volume in m^3
1 ½" 350 flexible pool cleaner	**69661**	6	6.6	0.053
1 ½" 350 aluminium pool cleaner	**69673**	6	-	-
Triangular pool cleaner	**69663**	6	-	-
Oval pool cleaner	**69664**	6	-	-



69673



69663



69664



69656



69658



69669

Blue Line wall brush - wing-nut fastening

	Code	Standard Pack	Standard Weight in kg	Standard Volume in m^3
Adjustable handle wall brush (48 cm)	**69656**	12	2.5	0.04
Fixed handle wall brush (50 cm)	**69658**	12	3.9	0.04
Multifunction manual brush	**69669**	24	-	-

MANUAL POOL CLEANERS - BLUE LINE RANGE

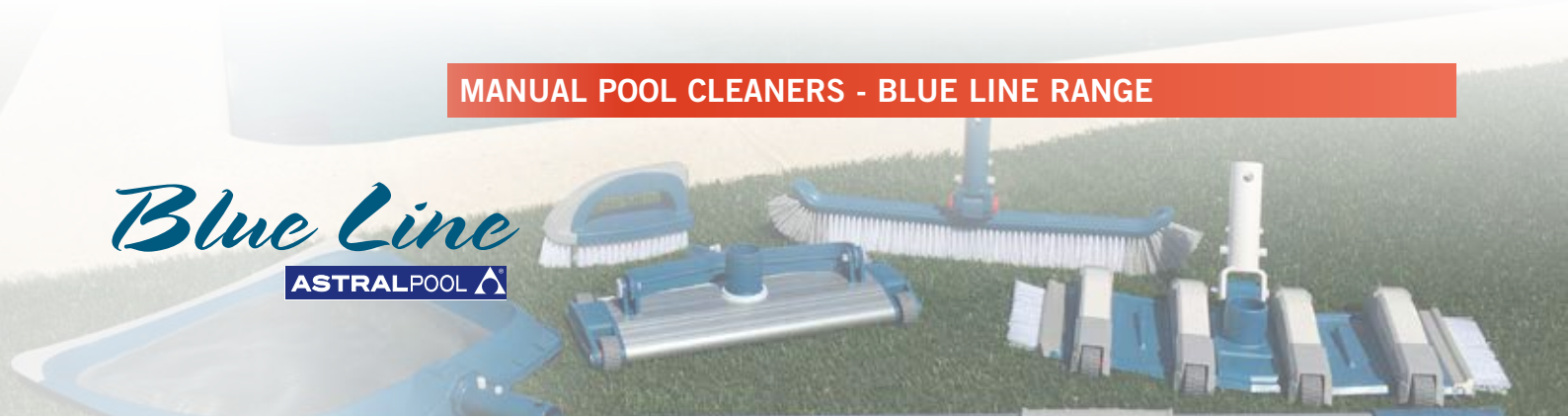



69665

Blue Line leaf skimmer - wing-nut fastening

	Code	Standard Pack	Standard Weight in kg	Standard Volume in m³
Plastic flat leaf skimmer	**69665**	12	-	-
Plastic net leaf skimmer fixed handle	**69666**	12	-	-
Aluminium net leaf skimmer	**69667**	12	-	-



69666

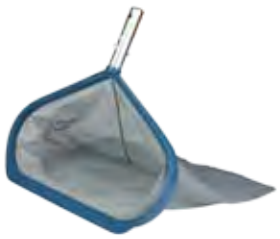

69667



69659 - 69660

Blue Line handles - wing-nut fastening

	Code	Standard Pack	Standard Weight in kg	Standard Volume in m³
1.8-3.6 m easy regulation aluminium handle	**69659**	12	-	-
2.4-4.8 m easy regulation aluminium handle	**69660**	12	-	-

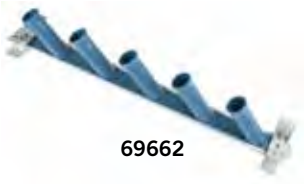

69662

Blue Line cleaning material wall bracket

	Code	Standard Pack	Standard Weight in kg	Standard Volume in m³
Cleaning material wall bracket	**69662**	6	-	-



69668

Blue Line floating dispenser

	Code	Standard Pack	Standard Weight in kg	Standard Volume in m³
Floating dispenser for 200g tablets	**69668**	12	-	-

MANUAL POOL CLEANERS - SHARK RANGE

Shark pool cleaner - wing-nut or wishbone fixing

	Code	Standard Pack	Standard Weight in kg	Standard Volume in m³
Shark Flexo pool cleaner	**36618**	6	9.9	0.04
Shark Oval pool cleaner	**40997**	5	6.4	0.04
Shark Injected Aluminium pool cleaner	**41625**	4	6.5	0.035
Shark Triangular pool cleaner	**36619**	4	5.2	0.04



36618



40997



41625



36619

Shark brushes - wing-nut or wishbone fixing



36615



36616



36617

	Code	Standard Pack	Standard Weight in kg	Standard Volume in m³
Shark special bottom curved brush	**36615**	10	3.7	0.04
Shark bottom/walls curved brush	**36616**	15	4.2	0.04
Shark corner suction brush	**36617**	12	2.4	0.04

Shark leaf skimmers - wing-nut or wishbone fixing



36613

36614

	Code	Standard Pack	Standard Weight in kg	Standard Volume in m³
Shark water surface leaf skimmer	**36613**	15	6.2	0.14
Shark deep water leaf skimmer	**36614**	15	6.5	0.14

Shark telescopic pole - wing-nut or wishbone fixing



38422 - 38423

	Code	Standard Pack	Standard Weight in kg	Standard Volume in m³
Shark 1.8 - 3.6 m telescopic pole	**38422**	10	11.7	0.05
Shark 2.4 - 4.8 m telescopic pole	**38423**	10	14.4	0.06

Shark floating dispenser for 5 tablets



	Code	Standard Pack	Standard Weight in kg	Standard Volume in m³
Floating dispenser for 5 tablets 200 g Shark	**36620**	12	6.6	0.14

Shark submergible analogue thermometer



	Code	Standard Pack	Standard Weight in kg	Standard Volume in m³
Shark submergible analogue thermometer	**36622**	10	2.8	0.04

CLASSIC ASTRALPOOL

MANUAL POOL CLEANERS - CLASSIC RANGE



01355 - 01356

Classic pool cleaner - wing-nut fastening

	Code	Standard Pack	Standard Weight in kg	Standard Volume in m³
Classic extruded aluminium pool cleaner 1 ½" connection 350 mm	**01355**	4	10.2	0.04
Classic extruded aluminium pool cleaner 2" connection 450 mm	**01356**	4	12.2	0.06



Flexo pool cleaner Classic

	Code	Standard Pack	Standard Weight in kg	Standard Volume in m³
Wishbone fixing	**01351**	4	7.2	0.04
Wing-nut fixing	**01352**	4	7.2	0.04



01405



01407

Classic brushes - wing-nut fastening

	Code	Standard Pack	Standard Weight in kg	Standard Volume in m³
Classic PP bristle 330mm straight brush	**01405**	20	2.8	0.04
Classic S.S. bristle 165mm straight brush	**01407**	20	9.0	0.018
Classic PP bristle 180mm straight brush	**09456**	14	6.1	0.177



09456



Classic brush holder - wing-nut fastening

	Code	Standard Pack	Standard Weight in kg	Standard Volume in m³
Classic water surface leaf skimmer with handle incorporated	**01400**	12	5	0.18



Classic fixed handle - wing-nut fastening

	Code	Standard Pack	Standard Weight in kg	Standard Volume in m³
Classic fixed handle 2.5 m	**01365**	12	10.2	0.06



01353-01354-08661

Classic pool cleaner - wishbone fixing

	Code	Standard Pack	Standard Weight in kg	Standard Volume in m³
Extruded aluminium pool cleaner				
1 ½" connection 350 mm	**01353**	4	11.8	0.04
2" connection 450 mm	**01354**	4	15.5	0.06
1 ½" connection 450 mm	**08661**	4	15.5	0.06

MANUAL POOL CLEANERS - CLASSIC RANGE

Classic public pool aluminium pool cleaner - wishbone fixing



16601



01357

01358

	Code	Standard Pack	Standard Weight in kg	Standard Volume in m³
Length: 800 mm				
Drag with cable (00210 not included)	**01357**	1	13.0	0.03
With nozzle	**16601**	1	13.0	0.03
Length: 450 mm				
With nozzle 1 ½" - 2" connection	**01358**	4	13.6	0.05

Classic brushes - wishbone fixing



01406



01404

	Code	Standard Pack	Standard Weight in kg	Standard Volume in m³
PP bristle 330mm straight brush	**01406**	20	2.8	0.04
Bottom/walls curved brush	**01404**	20	4	0.05
Floating line brush	**11789**	20	3.8	0.03

Classic leaf skimmers



01398



01396

	Code	Standard Pack	Standard Weight in kg	Standard Volume in m³
Wishbone fixing				
Water surface leaf skimmer	**01398**	20	4.2	0.12
Deep water leaf skimmer	**01396**	20	4.3	0.12
Wing-nut fixing				
Water surface leaf skimmer	**01399**	20	4.3	0.12
Deep water leaf skimmer	**01397**	20	4.4	0.12

Classic fixed handle - wishbone fixing



	Code	Standard Pack	Standard Weight in kg	Standard Volume in m³
Fixed handle 2.5 m	**01364**	20	11.4	0.06

CLASSIC ASTRALPOOL

MANUAL POOL CLEANERS - CLASSIC RANGE

Shark telescopic pole - wing-nut or wishbone fixing



	Code	Standard Pack	Standard Weight in kg	Standard Volume in m³
Classic 1.8 - 3.6 m telescopic pole	**01359**	12	13.4	0.05
Classic 2.4 - 4.8 m telescopic pole	**01360**	12	16.2	0.06

Classic reinforced telescopic pole - Public pools



Reinforced telescopic pole, aluminium	Code	Standard Pack	Standard Weight in kg	Standard Volume in m³
2.5 - 5 m	**01361**	5	16.0	0.04
3.75 - 7.5 m	**15838**	1	6.0	0.01
5 - 10 m	**01362**	1	6.5	0.02
6.5 - 13 m	**01363**	1	8.4	0.02

Hose adapter



For connecting wing nut assembly to clip hose or clip assembly to wing nut hose.

	Code	Standard Pack	Standard Weight in kg	Standard Volume in m³
Adapts the wishbone handle connection to wing-nut connection	**08465**	35	2.55	0.01
Adapts the reinforced pole connection to wing-nut connection	**17937**	38	2.66	0.01

Hose adapter



For connecting wing nut assembly to clip hose or clip assembly to wing nut hose.

	Code	Standard Pack	Standard Weight in kg	Standard Volume in m³
Adapts the connection hose clip to wing nuts	**14592**	48	3.36	0.01

Thermometers



Celsius & Fahrenheit scale.

	Code	Standard Pack	Standard Weight in kg	Standard Volume in m³
	20594	20	2.1	0.032

ZOO floating thermometers



Celsius & Fahrenheit scale.

	Code	Standard Pack	Standard Weight in kg	Standard Volume in m³
Basic line. Desktop display. This includes: 6 models of each one: duck, dolphin, frog and whale	**66058**	1	1.6	0.08
Duck model	**38613**	1	3.5	0.05
Dolphin model	**58652**	1	3.5	0.05
Frog model	**58653**	1	3.5	0.05
Whale model	**58654**	1	3.5	0.05






NET'N'CLEAN INTEGRATED CLEANING SYSTEM

NET 'N' CLEAN Integrated cleaning system

The NET'N'CLEAN is an efficient cleaning system, consisting of a six outlet distributor valve that receives clean water from the filter and distributes it sequentially to a series of nozzles installed on the pool floor.

This type of distribution from the bottom keeps the particles in suspension so they are collected by the skimmer and main drain and retained by the filter. It helps improve the use and efficacy of chemical products injected in the return piping and reduces heating costs by returning hot water along the bottom.

INSTALLATION DIAGRAM





Net'n'Clean distributor valve Ø 50 mm

Six way distribution valve. This valve is part of the Net'n'Clean cleaning system which is integrated in the pool floor. It distributes water sequentially through its various branches. Made of plastic and AISI 316L it has high resistance to salt water. Maximum working pressure: 1.4 bars. Maximum flow: 15 m³/h. Connections: 7 x Ø 50 mm. 2 pop-up nozzles for branch recommended.

	Code	Standard Pack	Standard Weight in kg	Standard Volume in m³
Net'n'Clean distributor valve: European model	**21257**	1	1.7	0.015



Net'N'Clean distributor valve Ø 63 mm

Distributor valve optimized for greater hydraulic performance. Maximum working pressure of 1.5 bars. Maximum flow of 25 m³/h. Connections: 7 x Ø 63 mm or 7 x Ø 75 mm. From 2 to 5 nozzles per branch.

	Code	Standard Pack	Standard Weight in kg	Standard Volume in m³
Net'N'Clean distributor valve Ø 63 mm	**35079**	1	5.6	0.031



Net'N'Clean reducing wall conduit for nozzles

Reducing conduit to install concrete Net'N'Clean nozzles (26985). Made in white PVC. Ø 50 mm inside & Ø 63 mm outside connections.

Code	Standard Pack	Standard Weight in kg	Standard Volume in m³
21248	12	7.3	0.032



Ø 90 mm wall conduit

PVC wall conduit. Cutting area of 120 mm for fitting it to the pool wall or floor. Ø 63 or Ø 75 connection, as required.

	Code	Standard Pack	Standard Weight in kg	Standard Volume in m³
Ø 90/Ø 63–Ø 75 mm wall conduit	**43590**	9	7.3	0.033

For inlets:
Net'N'Clean: 43584 - 43585
BCN 03: 43586 - 43587 - 43588 - 43589
Return inlet/suction nozzle for high flow rates: 41518 - 41519 - 41520 - 41521


Concrete


Concrete


Fibreglass


Liner


65232

NET'N'CLEAN INTEGRATED CLEANING SYSTEM

Net'N'Clean nozzles

Range of Net'N'Clean nozzles with four different outlets. S4 is recommended for pool floor and S1 or S2 for steps. Designed for concrete pools with glass tiling, liner pools and polyester pools. For in-ground pools, both adjustable and fixed nozzles are available, and for liner pools there are self-tapping nozzles or nozzles with metal inserts.

	Code	Standard Pack	Standard Weight in kg	Standard Volume in m^3
Nozzles				
For concrete pools:				
With swivel joint	**26985**	12	4.14	0.02
Fixed	**26986**	12	3.78	0.02
For polyester pools:				
Fixed	**21209**	-	-	-
For liner pools:				
Fixed, with PN10 metal insert	**28500**	12	5.05	0.034
Adjustable, with INSERTS	**43584**	12	5.64	0.033
Adjustable, SELF-TAPPING	**43585**	12	5.30	0.033
Bodies				
For concrete pools:				
With swivel joint	**65230**	12	4.44	0.02
Fixed	**65231**	12	4.44	0.02
For polyester pools:				
Fixed	**65232**	12	4.44	0.02

Inner assembly kit

Colours can be selected with the minimum number of parts. Existing pools can be renewed without any effort.


65234


65234CL090


65234CL129


65234CL144

	Code	Standard Pack	Standard Weight in kg	Standard Volume in m^3
Inner assembly kit				
White	**65234**	12	4.4	0.031
Beige	**65234CL090**	12	4.4	0.031
Light grey	**65234CL129**	12	4.4	0.031
Anthracite grey	**65234CL144**	12	4.4	0.031



Concrete

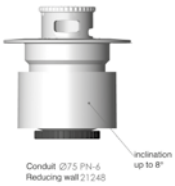



Liner

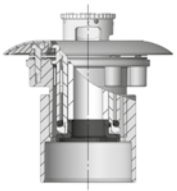



Polyester

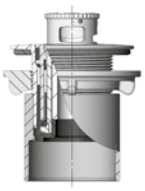



HOSES



Hose connectors

	Code	Standard Pack	Standard Weight in kg	Standard Volume in m³
Ø 38 mm for connections to inlets 16328, 16329, 16330, 21644, 21645, in white ABS	**05684**	12	1.0	0.003
Ø 50 mm connections to inlets 00315, grey PP	**01392**	12	1.0	0.006



Hose fitting

White ABS plastic.

	Code	Standard Pack	Standard Weight in kg	Standard Volume in m³
For Ø 38 mm hose, male thread 1½"	**01393**	12	1.0	0.006



Hose cuffs

	Code	Standard Pack	Standard Weight in kg	Standard Volume in m³
Made in flexible blue PVC				
For Ø 38 mm (01372) hose Only for vac inlets 24415	**07958**	12	2.0	0.003
For Ø 38 mm hose (01372)	**01385**	12	2.0	0.003
For Ø 50 mm hose (01373)	**01386**	12	3.0	0.010
Made in flexible white PVC				
For Ø 38 mm hose (01374-01375 01376-01377-01378)	**01387**	12	2.0	0.030
For Ø 50 mm hose (01379)	**01388**	12	3.0	0.010



Floating suction hose

Transparent blue Polyethylene hose.

	Code	Standard Pack	Standard Weight in kg	Standard Volume in m³
Ø 38 mm (1½")	**01372**	30 m	8.0	0.108
Ø 50 mm (2")	**01373**	30 m	14.0	0.192



Floating suction hose

Made of blue polyethylene. Includes terminals, except in the 30-m hose (01374, 01379).

	Code	Standard Pack	Standard Weight in kg	Standard Volume in m³
Ø 38 mm (1½")				
30 m	**01374**	1	12.0	0.192
15 m	**01375**	1	5.6	0.192
12 m	**01376**	1	4.5	0.192
10 m	**01377**	1	3.0	0.192
8 m	**01378**	1	3.0	0.192
Ø 50 mm (2")				
30 m	**01379**	1	15.0	0.240



Hose roller

For hoses of up to 15 metres.

	Code	Standard Pack	Standard Weight in kg	Standard Volume in m³
Hose roller	**66042**	1	2.4	0.05

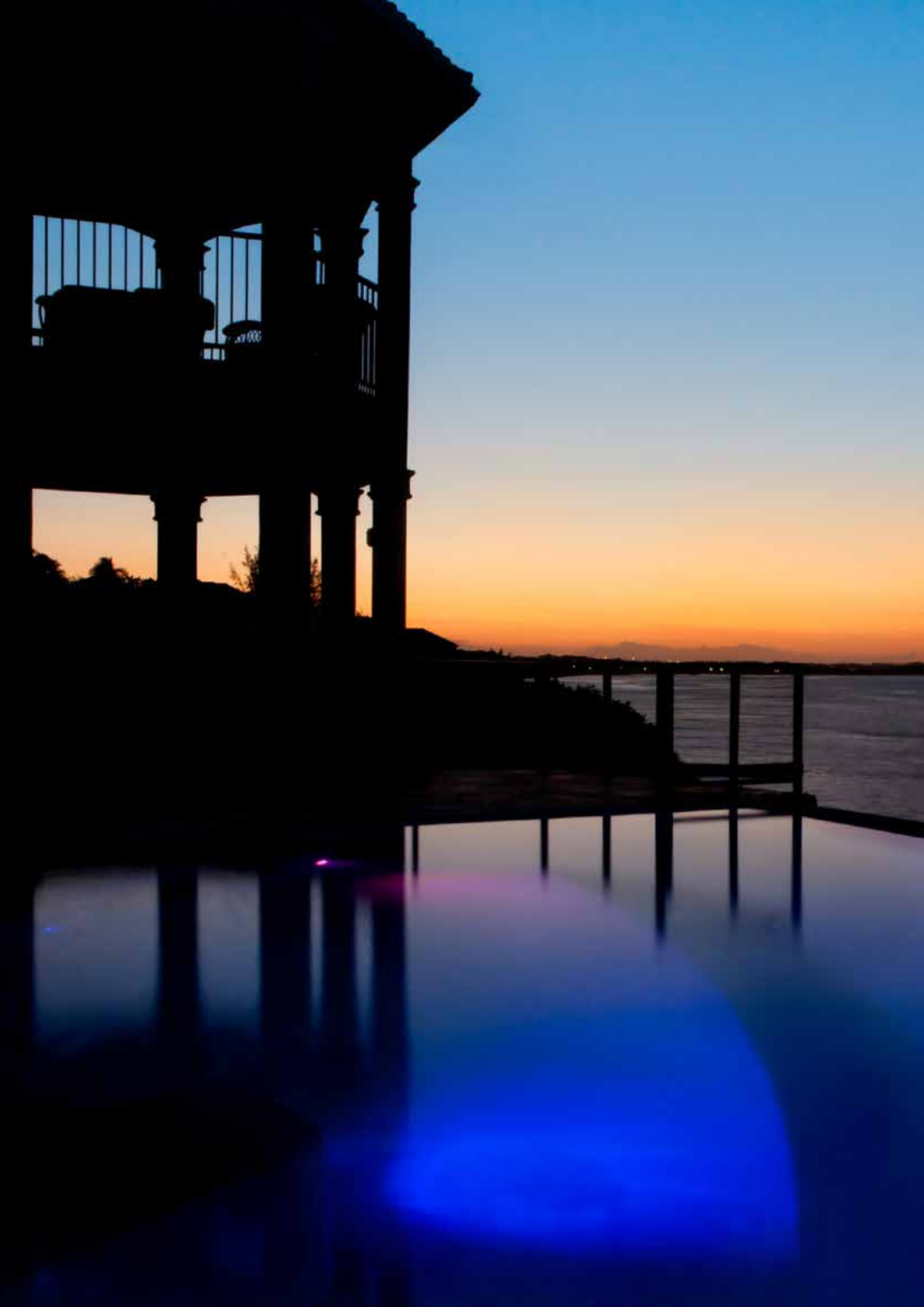



POOL LIGHTING

250 • LEDs selection guide
251 • LED lighting - LumiPlus
262 • LED lighting - control systems
266 • LED lighting - other LED solutions
267 • Halogen lighting
270 • Niches
271 • Transformers and accessories
274 • Aquarmony underwater music system

LEDS SELECTION GUIDE



			Projectors							Lamps		
			Public pools		Residential pools		Ladders - Small spaces - SPAS			Public pools	Residential pools	
			LumiPlus Design	LumiPlus Flexi V2	LumiPlus Flexi V1	PAR56 & Flat	LumiPlus Mini V3	LumiPlus Mini V2	LumiPlus Micro	LumiPlus PAR56 V2	LumiPlus PAR56 V1 (2)	Lamps PAR56 (2)
Brand			ASTRALPOOL	ASTRALPOOL	ASTRALPOOL	AQUASPHERE	ASTRALPOOL	ASTRALPOOL	ASTRALPOOL	ASTRALPOOL	ASTRALPOOL	AQUASPHERE
Lifespan (h)			L70 50000h	L70 50000h	L70 50000h	25000h	L70 50000h	L70 50000h	L70 50000h	L70 50000h	L70 50000h	25000h
Warranty (years)			3	3	3	2	2	2	2	3	3	2
Options finishing			Stainless steel effect White	Stainless steel White Anthracite Light grey Beige	Stainless steel White Anthracite Light grey Beige	White	Stainless steel effect White	Stainless steel White Anthracite Light grey Beige	Stainless steel White	-	-	-
Type of installation			Niche Ø 180 mm	Niche Ø180 mm up to 230 mm (PAR56) Surface mounted Inlet or nozzle	Niche Ø180 mm up to Ø230 mm (PAR56) Surface mounted Inlet or nozzle	Niche Ø230 mm (PAR56) Surface mounted	Inlet or bushing Mini niche	Ø63 mm pipe 1"½ thread Mini niche	Ø50 mm pipe 1"¼ thread	PAR56 Projector	PAR56 Projector	PAR56 Projector
RGB	**Watts**		40	43	22	15	4	4	4	48	27	15
	Lumens		2544	2544	1100	900	186	186	186	2544	1100	900
	Efficiency		A	A	A	A	A	A	A	A	A	A
	Control options	**Control**	LumiPlus Top LumiPlus App LumiPlus DMX Fluidra Connect compatible	LumiPlus ECO LumiPlus Top LumiPlus App Fluidra Connect compatible	Wireless Control Motion	RC	LumiPlus Top LumiPlus App LumiPlus DMX Fluidra Connect compatible			LumiPlus Top LumiPlus App LumiPlus DMX Fluidra Connect compatible	(a) LumiPlus ECO LumiPlus Top LumiPlus App Fluidra Connect compatible (b) Wireless control Motion	RC
		Capacity	Control up to 12 projectors per Modulator	Control up to 15 projectors per Modulator	3 projectors at 5 mts	2 projectors at 2 mts	-			Control up to 12 projectors per Modulator	(a) Control up to 15 projectors per Modulator (b) 3 projectors at 5 mts	2 projectors at 2 mts
White	**Watts**		45	32	16 AC 14 DC	9	4	4	6	32	16 AC 14 DC	9
	Lumens		4320	4320	1485	900	315	315	315	4320	1485	900
	Efficiency	**DC(1)**	-	A++	A+	-	-	-	-	A++	A+	-
		AC	A+	A++	A+	A+	A+	A+	A+	-	A+	A+

* Compatible with ABS niches.
(1) DC - power supply included.
(2) AC lamp direct retrofit with 300 W halogen lamps.

LED LIGHTING - LUMIPLUS



AstralPool LumiPlus is the most extensive family in the market of underwater spotlights for public, commercial and residential pools.

The entire LumiPlus range is made of high-quality LEDs and electronic components, and is manufactured entirely in the EU to European quality standards.

The AstralPool LumiPlus family delivers:

- Greater energy efficiency.
- High performance projectors with top quality lighting (TQL) technology.
- Enhanced energy efficiency in pools thanks to the use of LumiPlus DC lamps and projectors run from a direct current power source (24 V DC).
- Great control over the range with the inclusion of the Internet of Pools (IoP) concept by Fluidra Connect.
- IP68 protection rating.
- L70 50000 hours lifespan.

The most comprehensive range for every type of pool

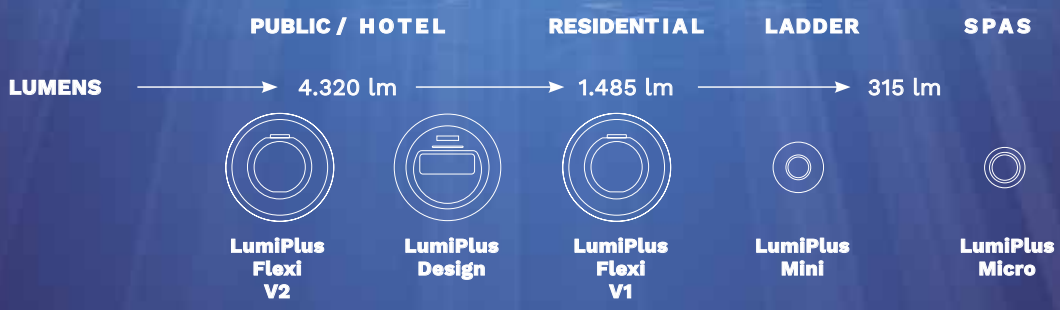

PROJECTOR

LumiPlus Flexi

The LED solution that adapts to every type of pool

Available in 2021

Stainless Steel version

New



WHITE | ANTHRACITE GREY | BEIGE | LIGHT GREY | STAINLESS STEEL

The LumiPlus projectors, FlexiNiche, FlexiSlim and FlexiRapid, are characterised by their more stylish finish and their great adaptability to any type of new-build or existing pool, whether a liner or concrete pool, that can be fitted to niches on the surface or in bushings.

“AstralPool’s LumiPlus Flexi system delivers top flexibility”

GARANTÍA 3 AÑOS YEARS GUARANTEE

GREEN FRIENDLY

PROJECTOR

LumiPlus Flexi

The LED solution that adapts to all types of pool



The family of LumiPlus Flexi PROJECTORS, FlexiNiche, FlexiSlim and FlexiRapid, is characterized by its great adaptability to any type of new-build and existing liner or concrete pool and can be fitted in a niche, on the surface or in a bushing.

Maximum flexibility with the LumiPlus Flexi system by AstralPool.

Ideal for public/hotel pools and residential pools in version V2 and V1, respectively.

LumiPlus Flexi is made up of 3 components

1	2	3
		
Spotlight	Niche	Faceplate

The 3 components are required for the proper installation of FlexiNiche and FlexiRapid.

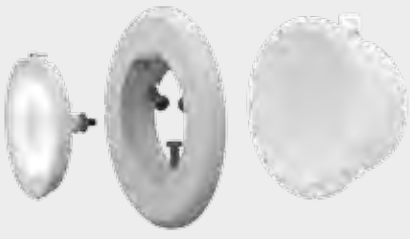

LumiPlus FlexiNiche



LumiPlus FlexiSlim



LumiPlus FlexiRapid

* Resistant to salt water except stainless steel version

LED LIGHTING - LUMIPLUS

LumiPlus Flexi projectors - The LED solution that adapts to every type of pool

The family of LumiPlus Flexi spotlights – FlexiNiche, FlexiSlim and FlexiRapid – is characterised by its great adaptability to any type of new-build or existing pool, whether a liner or concrete pool, that can be fitted to niches, on the surface or in bushings. The LumiPlus Flexi system delivers top flexibility. Versions V1 and V2 are ideal for public/hotel pools and residential pools, respectively.

Note: To correctly light a pool, it is advisable to install a LumiPlus Flexi V1 for every 20m² of water surface or a LumiPlus Flexi V2 for every 25m² of water surface. Projectors should always be installed submerged in water.

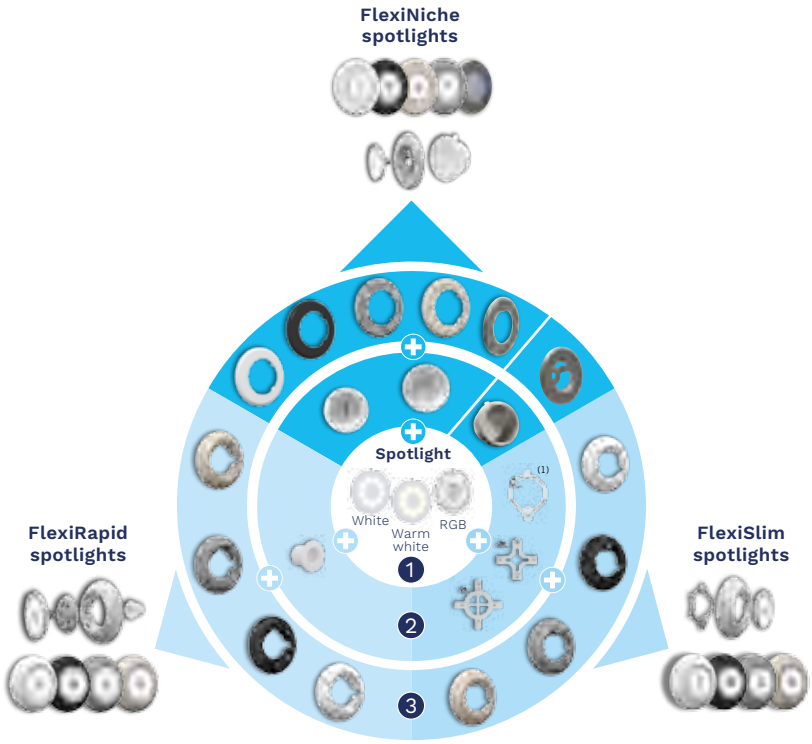

Available in 2021:

FlexiNiche version in Stainless Steel

- Full stainless steel
- ABS body and stainless steel embellisher

	LumiPlus FlexiNiche		LumiPlus FlexiSlim	LumiPlus FlexiRapid
Type of installation	Niche Ø180 - Ø230		Walls	Inlet
Ø of faceplate **Depth of faceplate**	ABS: Ø 294 mm / 20 mm including ABS with SS embellisher	Full stainless steel: Ø 310 mm / 26 mm	Ø 290 mm / 51 mm	Ø 267 mm / 48 mm
	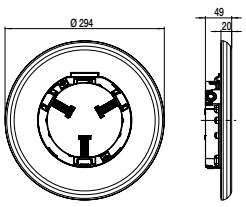	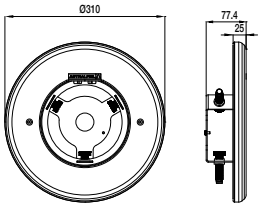	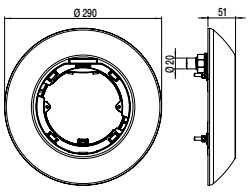	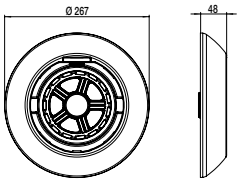

How to install them?

LumiPlus FlexiNiche	LumiPlus FlexiSlim	LumiPlus FlexiRapid
LumiPlus FlexiNiche	LumiPlus FlexiSlim	LumiPlus FlexiRapid

LumiPlus Flexi LED configurator

https://www.astralpool.com/configurador-led-lumiplus-flexi

The models with RGB light are compatible with Fluidra Connect.

Seawater-proof. ABS versions.

(1) Included.

LED LIGHTING - LUMIPLUS

LumiPlus Flexi projectors - Selection guide

Follow the steps below to choose the LumiPlus Flexi that best suits your pool:

1 Select colour of light

		Niche				Walls				Inlet / Bushing			
		RESIDENTIAL V1 White 1485 lm RGB 1100 lm		PUBLIC/HOTEL V2 White 4320 lm RGB 2544 lm		RESIDENTIAL V1 White 1485 lm RGB 1100 lm		PUBLIC/HOTEL V2 White 4320 lm RGB 2544 lm		RESIDENTIAL V1 White 1485 lm RGB 1100 lm		PUBLIC/HOTEL V2 White 4320 lm RGB 2544 lm	
		V1 - AC	V1 - DC	V2 - AC	V2 - DC	V1 - AC	V1 - DC	V2 - AC	V2 - DC	V1 - AC	V1 - DC	V2 - AC	V2 - DC
WHITE		White 16W (24VA)	White 14W	White 32W (42VA)	White 32W	White 16W (24VA)	White 14W	White 32W (42VA)	White 32W	White 16W (24VA)	White 14W	White 32W (42VA)	White 32W
WHITE		Warm white 16W (24VA)	Warm white 14W	Warm White 32W (42VA)	Warm white 32W	Warm white 16W (24VA)	Warm white 14W	Warm White 32W (42VA)	Warm white 32W	Warm white 16W (24VA)	Warm white 14W	Warm White 32W (42VA)	Warm white 32W
RGB		RGB 22W (29VA)		RGB 43W (54VA)		RGB 22W (29VA)		RGB 43W (54VA)		RGB 22W (29VA)		RGB 43W (54VA)	
RGB		Wireless 22W (29VA)		RGB-DMX 43W (54VA)		Wireless 22W (29VA)		RGB-DMX 43W (54VA)		Wireless 22W (29VA)		RGB-DMX 43W (54VA)	

2 Select a model according to the type of installation



Ø230 mm models



Ø180 mm models



Compatible with the brackets for Flat, Extraflat and Slim projectors by AstralPool

FlexiSlim adaptor (included)



Any bushing with 1"½ internal thread

3 Select faceplate colour

FlexiNiche



WHITE | ANTHRACITE GREY | BEIGE | LIGHT GREY | STAINLESS* STEEL

FlexiSlim



WHITE | ANTHRACITE GREY | BEIGE | LIGHT GREY

FlexiRapid



WHITE | ANTHRACITE GREY | BEIGE | LIGHT GREY

All RGB models are compatible with Fluidra Connect.

* Full body in Stainless Steel or ABS body and SS embellisher.

Note: AC - Alternating current. DC - Direct current

Seawater-proof. ABS versions.

Power pack included in FLEXI DC spotlights

LED LIGHTING - LUMIPLUS

LumiPlus Flexi projectors - Components required to install a LumiPlus Flexi

Choose from among the components according to your requirements:

- **New-build pools** - FlexiNiche or FlexiRapid: 1+2+3
- **New-build pools** - FlexiSlim: 1+3
- **Replacement without changing niche:** 1+3

1 SPOTLIGHT





	Code V1	Code V2
White AC LumiPlus Flexi spotlight	71200	71233
Warm White AC LumiPlus Flexi spotlight	71200WW	71233WW
White DC LumiPlus Flexi spotlight	71201	71202
Warm White DC LumiPlus Flexi spotlight	71201WW	71202WW
RGB AC LumiPlus Flexi spotlight (1)	71203	71204
Wireless AC LumiPlus Flexi spotlight (2)	71205	
Wireless AC 1 PL LumiPlus Flexi spotlight + 1 Control Motion (2)	71206	
Wireless AC 2 PL LumiPlus Flexi spotlight + 1 Control Motion (2)	71207	
RGB DMX AC LumiPlus Flexi spotlight (1)		71208

All spotlights come with a 2.5 m power cable. Power cables of 5 m, 10 m and 15 m available on request.
(1) Choose the most suitable remote control (see control systems section).
(2) Compatible with ABS trim solutions.

2 INSTALLATION





NICHES (*)	Code NICHE Ø180	Code NICHE Ø230
Niche in ABS for concrete pools	59813	00349
Niche S.S. for concrete pools /prefabricated pools		54102 / 54103
Niche in ABS for prefabricated pools with inserts	59814	00364 / 17805
Niche in ABS for prefabricated pools without inserts	59815	28887 / 72261(1)
Niche in ABS for panel pools with inserts / without inserts		23671 / 23670
INLET		
Inlet for concrete pools with 1 ½" threaded Ø63 PN-6 piping		35418
Inlet for concrete pools with 1 ½" threaded Ø63 PN-10 piping		35421
Inlet for liner prefabricated pools with 1 ½" thread		27084
Inlet for polyester prefabricated pools		38805

Other Ø230 and Ø180 niches also available (see catalogue).
For FlexiSlim version installed in concrete + liner pools, Kit 71234 should be used to complete installation (not delivered with).
* Suitable to use ABS niches with ABS trim Flexi solutions (1) Parker screw

3 TRIM







FLEXINICHE	Code
White	71209
Beige	71209CL090
Light Grey	71209CL129
Anthracite grey	71209CL144
Stainless steel embellisher with ABS fitting (New)	71209CLSS
Full Stainless Steel	73440
FLEXISLIM	
White	71210
Beige	71210CL090
Light Grey	71210CL129
Anthracite grey	71210CL144
FLEXIRAPID	
White	71211
Beige	71211CL090
Light Grey	71211CL129
Anthracite grey	71211CL144

KITS : FACEPLATE + SPOTLIGHT



	Code WHITE AC	Code WHITE DC
FlexiNiche: White faceplate + white spotlight	71212	71213
FlexiSlim: White faceplate + white spotlight	71214	71215
FlexiRapid: White faceplate + white spotlight	71216	71217
Kit FlexiNiche White + Vulcanized Kit (to convert from halogen to LED)*	71212K	
FlexiNiche : Full SS Projector body + white spotlight (New)	73442	73441

AC - Alternating current DC - Direct current *The 2 components of the kit are delivered separatly

LED LIGHTING - LUMIPLUS

Projector Design

To correctly light a pool it is advisable to install a projector from the LumiPlus Design range every 25 m² of water surface.

Note: this recommendation applies to pools light in colour with white light spotlights, but if there are RGB spotlights more should be fitted. In dark or stainless steel pools it is recommended to use more projectors per m².

Projectors for installation in "Design" type niches (not included)

The RGB model is compatible with LumiPlus ECO, LumiPlus Top, LumiPlus LED APP and LumiPlus Modbus controls. The RGB DMX model requires the LumiPlus DMX 41107 modulator.



Light Colour	Type of faceplate		Consumption	Luminous flux	
	White	Stainless steel effect			
White	59807	59805	45W (50VA)	4320 lm	Rated voltage: 12V AC. IPX8 protection. Includes 2.5 m H07RN-F 2x1.5 mm² cable. Adaptor kit available for other niche types from diameter 180 to 190 mm. Code: 59818 It must always be installed underwater.
RGB	59803	59801	40W (55VA)	2544 lm	
RGB DMX	59811	59809	40W (55VA)	2544 lm	

Niches for projector Design



Niches				
Concrete pool	Prefabricated pools		Fixing kit for other niches	
	With inserts	Without inserts		
59813	59814	59815	59818*	Compatible with: LumiPlus Design series. *Compatible with the majority of niches from Ø180 to Ø190 mm on the market (Hugo Lahme, MTS Produckts, Wibre...).

Fluidra Connect-compatible

Seawater-proof

LED LIGHTING - LUMIPLUS

LumiPlus lamps for PAR56 V2 projectors

To correctly light a pool it is advisable to install a light from the LumiPlus V2 range every 25 m² of water surface.

Note: this recommendation applies to pools light in colour with white light spotlights, but if there are RGB spotlights more should be fitted. In dark or stainless steel pools it is recommended to use more projectors per m². The RGB model is compatible with LumiPlus ECO, LumiPlus Top, LumiPlus LED APP and LumiPlus Modbus controls. The RGB DMX model requires the LumiPlus DMX 41107 modulator.



DC PAR56 V2 lamp					
Light Colour		**Code**	**Consumption**	**Luminous flux**	
White		**67516**	32W	4320 lm	Rated voltage: 24 V DC. Protection rating: IPX8. Includes 220V AC - 24 V DC power pack. Does not work with 220 V AC-12 V AC electromagnetic transformers. It must always be installed underwater.
Warm white		**67516WW**			



PAR56 V2 light				
Light Colour	**Code**	**Consumption**	**Luminous flux**	
RGB NN thing	**43411**	48W (64VA)	2544 lm	Rated Voltage: 12V AC. Protection: IPX8. It must always be installed underwater.
RGB DMX	**45637**	48W (64VA)	2544 lm	

LumiPlus lamps for PAR56 V1 projectors

To correctly light a pool it is advisable to install a light from the LumiPlus V1 range every 20m² of water surface.

Note: this recommendation applies to pools light in colour with white light spotlights, but if there are RGB spotlights more should be fitted. In dark or stainless steel pools it is recommended to use more projectors per m².



DC PAR56 V1 lamp				
Light Colour	**Code**	**Consumption**	**Luminous flux**	
White	**67515**	14W	1485 lm	Rated voltage: 24V DC. Protection rating: IPX8. Includes 220V AC - 24 V DC power pack. Does not work with 220 V AC-12 V AC electromagnetic transformers. It must always be installed underwater.
Warm white	**67515WW**			



PAR56 V1 lamp				
Light Colour	**Code**	**Consumption**	**Luminous flux**	
White	**52596**	16W (24VA)	1485 lm	Rated Voltage: 12V AC. Protection: IPX8. It must always be installed underwater.
Warm white	**52596WW**			
RGB NN thing	**56001**	27W (37VA)	1100 lm	



Wireless PAR56 V1 lamp						
	1 lamp + 1 Control Motion	**2 lamps + 1 Control Motion**	**1 lamp RGB 1.11 Wireless**	**Consumption per lamp**	**Luminous flux per lamp**	
	59126	**59127**	**59124**	27W (37VA)	1100 lm	Rated voltage: 12V AC. Protection rating: IPX8. It must always be installed underwater. The LumiPlus Control Motion is not waterproof.
	Pack of 8 boxes with 2 lamps + Control Motion with their respective display stands					
	59127K					

Fluidra Connect-compatible

Seawater-proof

LED LIGHTING - LUMIPLUS

LumiPlus MINI V3 projectors

Range of projectors to be integrated in the pool. Very easy to install. Suitable for installation in bushings, connector inlets, niches and spas. Available in white and stainless steel effect finish. Manufactured with IMD (in-mould decoration) technology.

The RGB model is compatible with LumiPlus ECO, LumiPlus Top, LumiPlus LED APP and LumiPlus Modbus controls. The RGB DMX model requires the LumiPlus DMX 52142 controller (see page 262-263).



MINI V3 projector							
Colour	Faceplate	Concrete	Prefabricated/ Liner	SPAS	Consumption	Luminous flux	
White	white	59979	69637	59981	4 W (7 VA)	315 lm	Rated Voltage: 12V AC (RGB & White) 24V DC (RGB-DMX) IPX8 protection. 2.5 m H07RN-F 2 x 1 mm² cable. It must always be installed underwater.
	Stainless steel effect	59980	69638	59982			
RGB	white	59971	69633	59973	4 W (6 VA)	186 lm	
	Stainless steel effect	59972	69634	59974			
RGB DMX	white	59975	69635	59977	4 W (4 VA)	186 lm	
	Stainless steel effect	59976	69636	59978			

Niches, nozzles and fittings for LumiPlus MINI V3 and LumiPlus FlexiRapid projectors

Niches for LumiPlus MINI V3						
Concrete pools				Prefabricated pools		
				Liner		Fibreglass
Bushing / Tube ø63 PN-6 / PN-10	1"½ threaded inlet Ø 63 PN-6 piping	1"½ threaded inlet Ø 63 PN-10 piping	Niche	1 ½" thread inlet	Niche	Inlet
62395	35418	35421	53956	27084	59983	38805
						

Fluidra Connect-compatible

Seawater-proof

LED LIGHTING - LUMIPLUS

LumiPlus MINI V2 projectors

To correctly light a pool it is advisable to install a projector from the LumiPlus Mini V2 range every 5 m² of water surface. NB: recommendations valid for light coloured pools and white light projectors; oversize in RGB colours. In darker coloured pools or stainless steel pools, we recommend oversizing the proportion of projectors per m².

Projectors may be installed both in and out of the water. Niche according to model; not included and needed to finish the installation. The RGB model is compatible with LumiPlus ECO, LumiPlus Top, LumiPlus LED APP and LumiPlus Modbus controls. The RGB DMX model requires the LumiPlus DMX 52142 controller (see page 262-263).



Snap-in MINI V2 projector					
Light Colour	Type of faceplate		Consumption	Luminous flux	
	white	S.S.			
RGB	52124	52125	4W (7VA)	186 lm	Rated Voltage: 12V AC (RGB & White) 24V DC (RGB-DMX)
White	52130	52131	4W (6VA)	315 lm	IPX8 protection.
RGB DMX	52136	52137	4W (4VA)	186 lm	Includes 2.5 m H07RN-F 2x1.5 mm² cable.
					Compatible with a Ø63 bushing (code 15661) or snap-in mini niche from concrete pool code 53956 (not included).



MINI V2 projector for SPA					
Light Colour	Type of faceplate		Consumption	Luminous flux	
	white	S.S.			
RGB	52126	52127	4W (7VA)	186 lm	Rated Voltage: 12V AC (RGB & White) 24V DC (RGB-DMX)
White	52132	52133	4W (6VA)	315 lm	IPX8 protection.
RGB DMX	52138	52139	4W (4VA)	186 lm	Includes 2.5 m H07RN-F 2x1.5 mm² cable.
					Fastened between a threaded bolt and 2" nut.



MINI V2 projector for Mini Niche (light point)					
Light Colour	Type of faceplate		Consumption	Luminous flux	
	white	S.S.			
RGB	52128	52129	4W (7VA)	186 lm	Rated Voltage: 12V AC (RGB & White) 24V DC (RGB-DMX)
White	52134	52135	4W (6VA)	315 lm	IPX8 protection.
RGB DMX	52140	52141	4W (4VA)	186 lm	Includes 2.5 m H07RN-F 2x1.5 mm² cable.
					To complete the projector select the right niche for each swimming pool type (see page 270).



	Beige	Light grey	Anthracite
Color front plate for Snap-in MINI V2 projector and MINI V2 projector for SPA and prefabricated pool	08554-0500CL090	08554-0500CL129	08554-0500CL144
Color front plate for MINI V2 projector for Mini Niche (light point)	04582-0500CL090	04582-0500CL129	04582-0500CL144

Fluidra Connect-compatible

LED LIGHTING - LUMIPLUS

LumiPlus MICRO projectors

To correctly light a pool it is advisable to install a projector from the LumiPlus Micro range every 5 m² of water surface. NB: recommendations valid for light coloured pools and white light projectors; oversize in RGB colours. In darker coloured pools or stainless steel pools, we recommend oversizing the proportion of projectors per m².

Projectors may be installed both in and out of the water. Niche according to model; not included and needed to finish the installation. The RGB model is compatible with LumiPlus ECO, LumiPlus Top, LumiPlus LED APP and LumiPlus Modbus controls. The RGB DMX model requires the LumiPlus DMX 52142 feed controller (see page 262-263).



Fast assembly MICRO lights				
Light Colour	Type of faceplate		Consumption	Luminous flux
	White	S.S.		
RGB	64552	64553	4W (7VA)	186 lm
White	38814	38816	6W (9VA)	315 lm
RGB DMX	64557	64558	4W (4VA)	186 lm

Rated Voltage: 12V AC (RGB & White)
24V DC (RGB-DMX)
IPX8 protection.
Includes 2.5 m H07RN-F 2x1.5 mm² cable.



MICRO lights for SPA				
Light Colour	Type of faceplate		Consumption	Luminous flux
	White	S.S.		
RGB	64554	64555	4W (7VA)	186 lm
White	40765	40766	4W (6VA)	315 lm
RGB DMX	64559	64560	4W (4VA)	186 lm

Rated Voltage: 12V AC (RGB & White)
24V DC (RGB-DMX)
IPX8 protection.
Includes 2.5 m H07RN-F 2x1.5 mm² cable.

Outdoor lighting - Brick Light Series projector



Brick Light Series lights					
Light Colour					Consumption
RGB		White			
Square	Round	Square	Round		
45716	45717	57089	57090		4W (6VA)

Rated voltage: 12 V AC.
Protection rating: IPX8.
Includes 2.5-m H07RN-F cable 2 x 1.5 mm².
The spotlight includes a galvanized steel niche for easy installation.

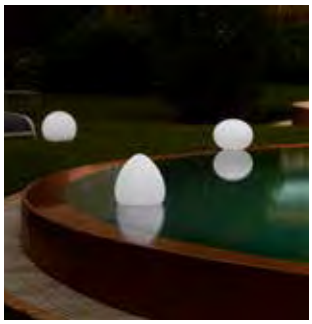

Outdoor lighting - Starlight portable lights

Decorative lights for indoors and out and even for floating in the water. Includes a remote control for choosing one of the 16 different colours available. They work on low consumption LED technology and once the battery has been charged have a runtime of up to 20 hours. Starlight is water-resistant The charger is supplied with the product.

	Code	Standard Pack	Standard Weight in kg	Standard Volume in m³
StarLight Altair Conical shape 290 x 320 mm	**53937**	1	3	0.050
StarLight Sirio Circle shape Ø 350 mm	**53938**	1	3	0.051
StarLight Vega Oval shape 350 x 270 mm	**53939**	1	3	0.051

LED LIGHTING - CONTROL SYSTEMS

System			Codes	Description	Projectors
LumiPlus RGB ECO			**32458**	**The simplest and most economical colour change system.** LumiPlus ECO is a push-button switch that allows 14 modes of operation: 7 fixed colours and 7 different colour sequences. Each time the push button is pressed, the colour or sequence will change. By pressing for several seconds, the light is white. The push button must be sized to withstand the power consumed by the number of lights in the facility. Maximum charge 700 VA. Must be connected in the transformer primary.	Any LumiPlus RGB projector.
LumiPlus WIRELESS	**LumiPlus Control Motion**		**59125**	**Colour change CONTROL in your hand.** The LumiPlus Control Motion remote control enables wireless projector control, directly offering on/off options, 12 colour changes, 8 sequence changes and sequence speed. It also detects movement, letting you activate colours and sequences by vertical and horizontal movements, respectively. Compatible with the LumiPlus Wireless range of projectors only. Can control 2 wireless projectors.	Flexi (ABS body) V1 RGB Wireless PAR56 V1 RGB Wireless * Not compatible with stainless steel FlexiNiche projectors.
	LumiPlus Wireless Range Extender		**64633**	Allows expansion of the signal that the LumiPlus Control Motion sends to the projectors with the wireless control system. Ideal for facilities whose architectural features or projectors installation makes it hard for the LumiPlus Control Motion signal to reach the wireless projectors properly.	
LumiPlus RGB TOP			**27818 + 41988**	**The LumiPlus TOP system for the remote control of pool colour changes.** System comprising the 27818 modulator and 41988 remote control that enables to control a large number of projectors. The modulator has an antenna with a 50m range to receive the signal from the remote control (bought separately). The LumiPlus TOP system enables: • Projector on/off action. • Colour selection: 12 fixed colours available. • Sequence selection: 8 sequences available. • Sequence speed selection: 8 speeds available for each sequence. Supplied separately. A total of 10 LumiPlus modulators can be synchronized.	Any LumiPlus RGB projector.
LumiPlus LED APP LumiPlus WIFI	**Existing installation**		**59131**	**Control your pool lighting from your smartphone.** App to check LumiPlus lights and projectors from an Android or iOS smartphone or tablet. Enables to control your LumiPlus lights or spotlights from your smartphone or tablet. The LumiPlus app should only be installed as an additional feature to the LumiPlus Modulator. It offers a range of 12 colours and 8 sequences or colour change programs. Free app you can download directly from the following sites: Apple: www.lumiplusled-ios.astralpool.com Android: www.lumiplusled-android.astralpool.com 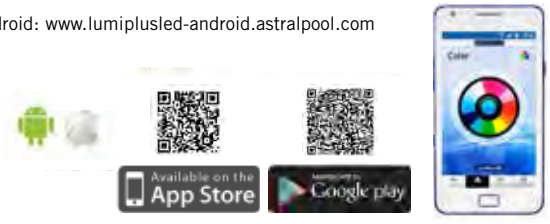	Any LumiPlus RGB projector
	New installation		**59132**		

LED LIGHTING - CONTROL SYSTEMS

System			Codes	Description	Projectors
LumiPlus Modbus FLUIDRA CONNECT				**Control your pool lighting anywhere, anytime.**	
	Existing installation		57434	The Modbus protocol enables the control of the LumiPlus modulator. It can be used to switch the projectors on and off, change their colours and sequence speed and set the time for putting the projectors in sleep mode. Download the Fluidra Connect app for instant information about the state of your pool 365 days a year. Fluidra Direct is peace of mind, comfort and leisure. In addition to controlling projectors, LumiPlus lets you control the filtration, water treatment and more of your pool through the Modbus protocol. The LumiPlus Modbus should only be installed as an additional feature to the LumiPlus 27818 modulator for correct installation and operation.	Any LumiPlus RGB projector
	New installation		57435		
LumiPlus RGB DMX				**System to prepare lighting scenes for fountains and large aquatic spaces**	
	RGB DMX Modulator		41107	DMX LED projector modulator/12V AC • DMX receiver for the Flexi, PAR56, S-LIM and Design ranges. • Receiving orders from the DMX controller (Astral DMX 74099 or Astral DMX Pro 74500) via the DMX bus and acting on the projectors that are connected.	LumiPlus RGB-DMX projector
	RGB-DMX power pack		52142	Product designed exclusively for use with V2 and V3 Mini LED and RGB DMX Micro projectors. The power pack can control up to 9 projectors, receiving orders from the system's DMX controller (Astral DMX 74099 or Astral DMX Pro 74500) via the DMX bus and acting on the projectors that are connected. The power pack has been designed to be used solely with DMX protocol and 24V DC DMX controllable parts from AstralPool.	
	DMX controller		New 74099	LumiPlus DMX System makes it possible to control lights individually or by groups. Users will have easy and intuitive full control over a projector or group of projectors. Main advantages / benefits: • Very accurate control over the lights: colour and dimming. • Plug and play. • Projectors can be operated independently or combined. • Allows creating new light scenes. • LumiPlus DMX system does not require any additional wiring for projectors. • Smartphone or tablet control via an app.	
	DMX PRO controller		New 74100		

Did you know?

According to EN 2004/35, **broken halogen lamps** should be disposed in special recycling centers.

We do it for YOU



Fluidra is committed to the environment by using sustainable products and practices to protect future generations.

ASTRALPOOL

Did you know?

LED lamps power consumption is 30x lower than Halogen lamps* and **LEDs lifespan is 10x** more than Halogen lamps.

DO like 70% of pool builders **& CONTRIBUTE** to the environment

Example of consumption in kW

1 pool with **2 projectors**.
Usage : 4 months / 4 hours per day.
Price of kWh : 0.12 €.

Consumption per season

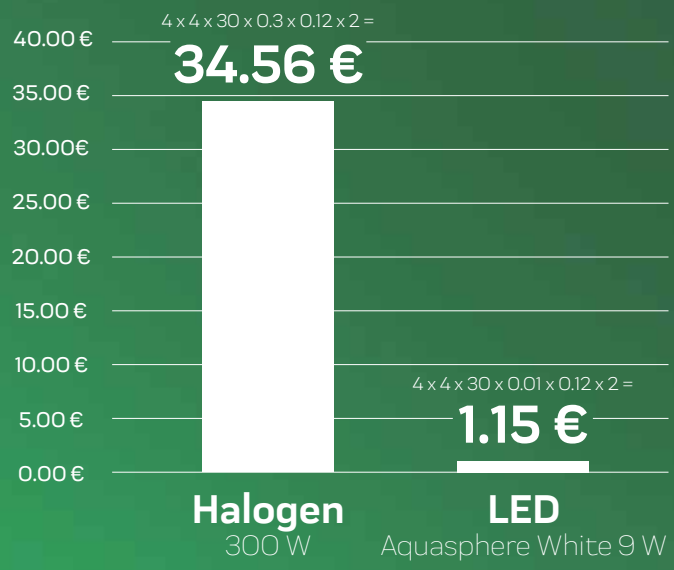

Power cost difference per season pays the price difference between halogen and LED lamps.

*Note : example taken Lamp PAR56 halogen 300 watts and a Lamp PAR56 9w , color white

ASTRALPOOL

LED LIGHTING - OTHER LED SOLUTIONS

PAR56 underwater lamp, improves energy efficiency compared to the traditional 300 W halogen PAR56 lamp. It must always be installed completely submerged. The lamps PAR56 are directly retrofittable with halogen 300 W lamps / projectors.

2 years warranty. Lifespan of 25000 h.

The RGB lamp is controlled by a remote control, which is included, with a 2 m range and can control 2 lamps. The White lamp does not include remote control.

To correctly light a pool it is advisable to install a light from this range every 15 m² of water surface.

Note: this recommendation applies to pools light in color with white light spotlights, but if there are RGB spotlights more should be fitted. In dark pools it is recommended to use more projectors per m².

Projectors PAR56 needs a niche (270 page) to complete the installation. Projector Flat to wall installations is delivered with the accessory to install in concrete and polyester pools. To complete the installation in panel pools needs spare part kit 24765-0500.

Projectors and lamps PAR56

New



PAR56 projectors					
Light color		Code	Consumption	Luminous flux	
White		**71741**	9 W	900 lm	Must be connected to a 12VAC safety transformer 2.5 m cable IPX8 protection
RGB		**71742**	15 W	900 lm	

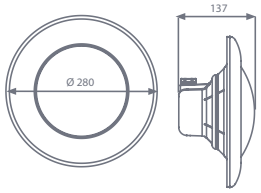



PAR56 lamps					
Light color		Code	Consumption	Luminous flux	
White		**71739**	9 W	900 lm	Must be connected to a 12VAC safety transformer IPX8 protection
RGB		**71740**	15 W	900 lm	

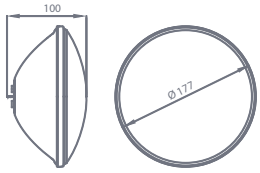

Projector Flat

New



Flat projectors					
Light color		Code	Consumption	Luminous flux	
White		**71743**	9 W	900 lm	Must be connected to a 12VAC safety transformer 2.5 m cable IPX8 protection
RGB		**71744**	15 W	900 lm	

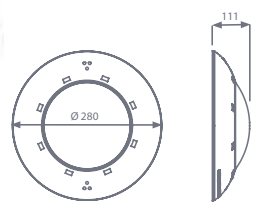

HALOGEN LIGHTING

Standard light

All plastic materials. PAR56 300W 12V AC halogen lamp.

For correct pool lighting, we recommend: one projector per 25-30 m² of pool area.
Note: This recommendation is valid for light coloured pools. For pools in dark colours or stainless steel, we recommend a higher proportion of projectors per m².

The projector must be always be submerged in water.

Projectors for installation in "standard" niche (included).



Standard light							
Energy eff.	Type of pool	Cable 2x6 mm² 2.5 m	Type of faceplate Ø280 mm		Consumption	Niche included	
			ABS	S.S.			
	Concrete	Yes	07844	07843	300W (300 VA)	Yes	Rated voltage: 12 V AC. Protection rating: IPX8. Compatible with standard niches (included).
		No	07838	07837			
	Prefabricated	Yes	07856	07855			
		No	07852	07851			

Global light

Made of plastic with hardware and anchoring system also made of plastic. Suitable for sea water.

Model based on standard projector. PAR56 300W 12V AC halogen lamp.

For correct pool lighting, we recommend one projector per 25-30 m² of pool area.
Note: This recommendation is valid for light coloured pools. For pools in dark colours or stainless steel, we recommend a higher proportion of projectors per m².

The projector must be always be submerged in water.

Compatible with AstralPool niches (not included) or any niche available on the market with interior diameters ranging between 220 mm and 235 mm (e.g.: Standard model and PS model).

For full projector assembly, the niche must be purchased separately (see page 270).



Global light							
Energy eff.	Type of pool	Cable 2x6 mm² 2.5 m	Type of faceplate Ø280 mm		Consumption	Niche included	
			ABS	S.S.			
	All depending on the niche	Yes	52608	-	300W (300 VA)	No	Rated voltage: 12 V AC. Protection rating: IPX8. Compatible with standard and PS niches (not included).

Seawater-proof

HALOGEN LIGHTING

Mini light

Small underwater projector. GX-5.3 50W 12V AC aluminized halogen lamp.

For correct pool lighting, we recommend one projector per 10 m^2 of pool area.
Note: This recommendation is valid for light coloured pools. For pools in dark colours or stainless steel, we recommend a higher proportion of projectors per m^2.

The projector must be always be submerged in water.

Projectors for installation in bushings or niche, depending on model (not included). To complete the installation the right housing should be purchased for each type of pool (see page 270).



Fast assembly Mini light						
Energy eff.	Body	Type of faceplate Ø96 mm		Consumption	Fixing	
		ABS	S.S.			
	Plastic	**33708**	-	50W (50 VA)	Ø63 wall conduit or Fast assembly Mini Niche	Rated voltage: 12V AC. IPX8 protection. Includes 2.5 m H07RN-F 2 x 1.5 mm^2 cable. Compatible with a 63 bushing (code 15661) or snap-in mini niche (not included). Select the appropriate option for each pool (see page 270).
	Metal	**33684**	-			



Mini light for Spa and prefabricated pool						
Energy eff.	Body	Type of faceplate Ø96 mm		Consumption	Fixing	
		ABS	S.S.			
	Plastic	**33709**	**36647**	50W (50 VA)	Threaded body and 2" nut	Rated voltage: 12 V AC. Protection rating: IPX8. Includes 2.5-m H07RN-F 2 x 1.5 mm^2 cable.
	Metal	**33685**	**36642**			



Mini light for Mini Niche (Light spot)							
Energy eff.	Body	Type of faceplate Ø96 mm		Consumption	Fixing	Niche included	
		ABS	S.S.				
	Plastic	**49820**	**49821**	50W (50 VA)	Mini niche	No	Rated voltage: 12V AC. IPX8 protection. Includes 2.5 m H07RN-F 2 x 1.5 mm^2 cable. Compatible with mini niche (not included). Select the appropriate option for each pool (see page 270)
	Metal	**49822**	**49823**				

HALOGEN LIGHTING

PS light

Plastic construction. PAR56 300W 12V AC halogen lamp.

For correct pool lighting, we recommend one projector per 25 m^2 of pool area.
Note: This recommendation is valid for light coloured pools. For pools in dark colours or stainless steel, we recommend a higher proportion of projectors per m^2.

The projector must be always be submerged in water.

Projectors for installation in PS niches (included).



PS light							
Energy eff.	Type of pool	Cable 2x6 mm^2 2.5 m	Type of faceplate Ø280 mm		Consumption	Niche included	
			ABS	S.S.			
	Concrete	Yes	**07846**	**07845**	300W (300 VA)	Yes	Rated voltage: 12 V AC. Protection rating: IPX8. Compatible with PS niches (included).
		No	**07833**	**07831**			
	Prefabricated	Yes	**07857**	**07858**			
		No	**07847**	**07850**			

Lamps for lights



Lamps for lights				
Energy eff.	Type of lamp		Code	Consumption
	Halogen PAR56	For lights with niche	**00370**	300W (12 V)
	Dichroic GX-5.3	For mini lights	**19334**	50W (12 V)

NICHES

Niches



Standard niches					Compatible with: **LumiPlus FlexiNiche**, **LumiPlus PAR56** series, **Standard** and Global halogen lights and **PAR56 Aquasphere projectors**
Concrete pool	Prefabricated pools		Panels pool		
	With inserts	Without inserts	With inserts	Without inserts	
00349	00364	28887	23671	23670	
	17805	72261			



AISI-36 stainless steel niches		Compatible with: **LumiPlus FlexiNiche** in Stainless Steel, **LumiPlus stainless PAR56** steel range and **stainless steel incandescent** projectors.
Concrete pools	Liner swimming pool	
54102	54103	



PS niches			Compatible with: **LumiPlus FlexiNiche, PS** halogen lights series, **Global** and **PAR56 Aquasphere projectors**
Concrete pool	Prefabricated pools		
	With inserts	Without inserts	
00355	-	00367	



MINI niches			Compatible with: **LumiPlus Mini 2.11** series and **Mini halogen lights for niche**.
Concrete pool	Prefabricated pools	Panel pools	
06967	00369	49828	



Fast assembly MINI niches		**53956**: Compatible with the **LumiPlus Mini 2.11, LumiPlus Mini 3.13, LumiPlus Rapid** and **Mini halogen snap-in ranges**. **59983**: Compatible with the **LumiPlus Mini 3.13** and **LumiPlus Rapid** ranges.
Concrete pools	Prefabricated pools	
53956	59983	

Niches for projector DESIGN and also compatibles with LumiPlus FlexiNiche



Niches				Compatible with: **LumiPlus FlexiNiche ABS and Stainless Steel** and **LumiPlus Design**. * Fitting kit to install LumiPlus Design to the majority of niches from Ø180 to Ø190 mm on the market (Hugo Lahme, MTS Produckts, Wibre...).
Concrete pool	Prefabricated pools		Fixing kit for other niches	
	With inserts	Without inserts		
59813	59814	59815	59818*	

Seawater-proof

TRANSFORMERS AND ACCESSORIES



More compact
More functional
Specially designed for lighting up fountains and pools.

Transformers for pool and fountain lighting

- Compact design.
- Suitable for all types of circuit board.
- Quick and easy installation.
- Connection via terminals protected against indirect contacts.
- Up to 40 m between the spotlight and transformer.
- Made in compliance with Standard UNE-EN-61558-2-6.
- IP-20 protection rating.
- Age-resistant housing.

	Code	Standard Pack	Standard Weight in kg	Standard Volume in m^3
100 VA 230 V to 12 V transformer	**00383-1369**	-	-	-
300 VA 230 V to 12 V transformer	**00384-1369**	-	-	-
600 VA 230 V to 12 V transformer	**00385-1369**	-	-	-



Transformers

Made in compliance with standard EN 60742.

	Code	Standard Pack	Standard Weight in kg	Standard Volume in m^3
130VA from 230V to 12V	**00383-4146**	6	15.0	0.011
300VA from 230V to 12V cable length up to 35 m	**71436**	4	21.0	0.012
600VA from 230V to 12V cable length up to 25 m	**00385-4146**	2	19.0	0.012

Alternative transformer range, on enquiry.



Encapsulated security transformer with IP-65 protection rating for pools

Manufactured according to the rules UNE-EN 61558 and directive CE.
- Bodywork has IP-657 protection rating.
- Class II transformer. Total protection against all electric shocks.
- Self-extinguishing bodywork, as per IEC 695-2-1
- Frequency of 50–60 Hz.

	Code	Standard Pack	Standard Weight in kg	Standard Volume in m^3
130 VA from 220-240 V to 12 V	**35807**	1	3.2	0.02
400 VA from 220-240 V to 12-17 V	**35385**	1	6.8	0.04
800 VA from 280-240 V to 12-17 V	**35386**	1	10.4	0.04



Transformer protection boxes

Made of zinc plated steel plate, painted finish.

	Code	Standard Pack	Standard Weight in kg	Standard Volume in m^3
For transformer 00383	**00386**	1	1.15	0.01
For transformer 00384	**00387**	1	1.57	0.01
For transformer 00385	**00388**	1	3.00	0.01

TRANSFORMERS AND ACCESSORIES



Connection box with security cover

Manufactured in ABS, made up of three ¾" inlets/outlets M-25 and ¾" thread connections.

	Code	Standard Pack	Standard Weight in kg	Standard Volume in m^3
Standard version	**30825**	12	4.65	0.030



Connection boxes for gluing pipes Ø50 mm

New

	Code	Standard Pack	Standard Weight in kg	Standard Volume in m^3
White	**65215**	8	3.8	0.030
Anthracite	**65215CL144**	8	3.8	0.030
Beige	**65215CL090**	8	3.8	0.030
Light Grey	**65215CL129**	8	3.8	0.030



Connection box

In AISI-316 stainless steel. Two PG 15 thread side outlets with two PG16 to M25 converters. ¾" BSP threaded bottom connection.

Code	Standard Pack	Standard Weight in kg	Standard Volume in m^3
00393	1	0.21	0.002



Flexible conduit hose

For connection from light to connection box, length 1 m hose.

	Code	Standard Pack	Standard Weight in kg	Standard Volume in m^3
Threaded ends ¾" & M25	**28138**	-	-	-
M-25 socket joint	**10892-0404**	-	-	-
Threaded ends ¾" and M26 150 cm	**28138-150**	-	-	-



100 m cable roll HO7RN-F 2 x 6 mm^2

The roll contains 100 m of cable HO7RN-F, with 2x6 mm^2 section. Ideal for all lights with PAR56, 300 W-12V lamps. Meets all the Standards of illumination and voltage for all types of pools. It is recommended for Standard, PS, Panel Protect, and UL-EUR series and fountain lights.

	Code	Standard Pack	Standard Weight in kg	Standard Volume in m^3
100m cable roll	**15264**	1	187.5	-

TRANSFORMERS AND ACCESSORIES



Underwater connection kit

The kit has all the necessary components to carry out any watertight connection. Due to the properties of the product, the resin seals all gaps. Maximum safety, easy installation, in 2 hours it is ready to be submerged.

	Code	Standard Pack	Standard Weight in kg	Standard Volume in m^3
Kit for Ø 13 to 15 mm cables	**32803**	1	0.3	0.002
Kit for Ø 8 to 12 mm cables	**35661**	1	0.3	0.002



Overhead connector with IP68 protection rating and 4 poles

Includes 5 connectors ant two wrenches.

Code	Standard Pack	Standard Weight in kg	Standard Volume in m^3
71318	1	-	-

AQUARMONY UNDERWATER MUSIC SYSTEM



Aquarmony Loudspeaker

With frontal installation. To listen to music and voice underwater creating a magical and different atmosphere. Aquarmony is a sealed waterproof loudspeaker designed for your pool. It is made of high quality components, innovative technology and with an assembly system assuring a correct operation in salt water or with a high Chlorine content. Easy installation.

	Code	Standard Pack	Standard Weight in kg	Standard Volume in m^3
Aquarmony Loudspeaker	**25680**	-	-	-
Niche for concrete pool	**00349**	-	-	-
Niche for liner pool	**00364**	-	-	-

Note: The niches come with a stuffing box assembly and a 1.5-m cable grommet specially designed for the Aquarmony range



TECHNICAL FEATURES	
Maximum power	60 W
Impedance	4 ohm
Frequency	200-12000 Hz
Maximum area per loudspeaker	80 m^2
Maximum installation depth	40 cm
Weight	5 Kg
Cable length supplied	5 m



Amplifier and loudspeakers - RK400S

Built-in SELV power pack with all required protection ratings and safety systems.

- Fully insulated input and output ports, in compliance with standard ENV 61558-1 CEI EN 64-8/7, Section 702.
- RCA stereo input port compatible with any source (CD player, MP3 player, smartphone, etc.).
- Input and output XLR link for connecting other RK400-S devices together.
- Automated equalizers and limiters specially redesigned by Aquarmony.
- Automatic gain control, which does not require volume buttons.
- Four 60 W RMS amplifiers that work separately.
- Output though a gold-plated screw connector.
- On/off and signal display light.

	Code	Standard Pack	Standard Weight in kg	Standard Volume in m^3
Amplifier and loudspeakers	**RK400S**	1	-	-

TECHNICAL FEATURES	
Maximum power	4 x 60 W rms
Impedance	4 ohm
Frequency	50-20,000 Hz
Weight	3.6 Kg



POOL LINING MATERIAL

277 • Soprema Pool 180/100 reinforced liner
277 • Soprema Pool 150/100 reinforced liner
278 • Liquid
279 • Alkorplan 200/100 reinforced liner
281 • Alkorplan 150/100 reinforced liner
283 • Alkorplan liner accessories
285 • Liner accessories
288 • Classification of liners depending on the pool
289 • Liners for stairs
290 • Conditions for accepting an order
292 • Glass tiling for pools
299 • Glass tiling: Projects
300 • Glass tiling: Technical specifications

SOPREMA POOL 180/100 AND 150/100 REINFORCED LINER

Optimal weldability.

U.V. ray resistance.

Resistance against microorganisms with "Bio Shield" treatment.

Insensitivity to hot-cold cycles.

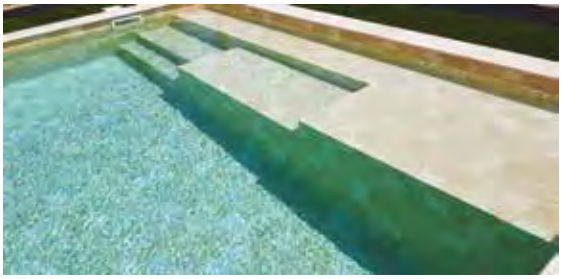

SOPREMA

SOPREMA, world leader in waterproofing solutions, offers a big range of reinforced membranes PVC for swimming pools.

4-LAYER MEMBRANE

Synthetic reinforced PVC membranes manufactured by impregnation with high quality raw materials (resins, plasticizers, stabilizers and pigments).

Composed of 4 layers with different and complementary formulations, introducing a polyester reinforcement between the second and third layers.

This reinforcement provides the membrane with great tensile strength and high dimensional stability.



«BIO-SHIELD» TREATMENT

Its formulation with "BIO-SHIELD" treatment guarantees total resistance to the formation of microorganisms and prevents any molecular change.

GUARANTEE

The minimum guarantee offered for all membranes is 10 years. Depending on the type of membrane, the guarantees are extended. Consult the details of the extended guarantees on each line.



SOPREMA POOL 180/100 REINFORCED LINER



Sensitive White



Sensitive Sand



Sensitive Grey

3D membrane

THE +

+ attractive and aesthetic
+ fast installation
+ sensory experience

The 3D range replicates the feeling and the aesthetic aspects of mosaics and natural materials. The relief motifs, of great aesthetic appeal, are a plus to the characteristic advantages of reinforced PVC cladding: a simple and quick installation and a great protective and waterproofing capacity. All 3D membranes comply with EN 15836 and DIN 51097 anti-slip regulations.

Description	Colour	Thicknes	Code
PVC reinforced membrane of 1.8 mm and 1.5 mm with protection against UV and microorganisms. **Roll of 1.65 x 25 m.** **12 years waterproofing guarantee.** **3 years antibacterial stains guarantee.**	Sensitive White	1.8 mm	**156988/SSHB**
	Sensitive Sand	1.8 mm	**156988/SSSA**
	Sensitive Grey	1.8 mm	**156988/SSGM**
	Sensitive Black	1.8 mm	**156988/SSNB**
	Sensitive Bali	1.8 mm	**156988/SSBA**
	Sensitive Bali Sand **New**	1.8 mm	**156988/SSBS**
	Spirit Ceram Blue	1.5 mm	**157009/SCB**
	Spirit Ceram Grey	1.5 mm	**157009/SCG**



SOPREMA POOL 150/100 REINFORCED LINER



Basalt Grey



Sand

PREMIUM membrane

Description	Colour	Premium	Grip
PVC reinforced membrane of 1.5 mm with varnished coating superior protection against UV and microorganisms. **Premium** **Roll of 1.65 x 25 m.** **12 years waterproofing guarantee.** **3 years antibacterial stains guarantee.** **Grip (Anti-slip version)** **Roll of 1.65 x 10 m.** **10 years waterproofing guarantee.**	Light Blue	**156967/CA**	**156991/CA**
	Blue	**156967/AB**	**156991/AB**
	Dark Blue **New**	**156967/DB**	**156991/DB**
	White	**156967/HB**	**156991/HB**
	Sand	**156967/SA**	**156991/SA**
	Light Grey	**156967/GC**	**156991/GC**
	Medium Grey	**156967/GM**	**156991/GM**
	Basalt Grey	**156967/GA**	**156991/GA**
	Black **New**	**156967/NB**	**156991/NB**
	Wild Musk **New**	**156967/VM**	**156991/VM**

SOPREMA POOL 150/100 REINFORCED LINER



Marbella Blue



Bali

DESIGN membrane

Description	Colour	Premium	Grip
PVC reinforced membrane of 1.5 mm with varnished coating superior protection against UV and microorganisms. **Design** **Roll of 1.65 x 25 m.** **12 years waterproofing guarantee.** **3 years antibacterial stains guarantee.** **Grip (Anti-slip version)** **Roll of 1.65 x 10 m.** **10 years waterproofing guarantee.**	Marbella Blue	**156975/MMB**	**156991/MMB**
	Marbella Black	**156975/MMBK**	**156991/MMBK**
	Marbella Grey	**156975/MMG**	**156991/MMG**
	Mosaic Blue New	**156975/MNB**	**156991/MNB**
	Bali	**156975/BALI**	**156991/BALI**
	Bali Sand	**156975/SDBA**	**156991/SDBA**
	Pearl Black New	**156975/PB**	-
	Sky Blue New	**156975/SB**	-



White



Light Blue

ONE membrane

Description	Colour	One	Grip
PVC reinforced membrane of 1.5 mm with protection standard against UV and microorganisms. **10 years waterproofing guarantee.** **One** **Roll of 1.65 x 25 m.** **Grip (Anti-slip version)** **Roll of 1.65 x 10 m.**	Light Blue	**156966/CA**	**156991/CA**
	Blue	**156966/AB**	**156991/AB**
	Blue Saphir New	**156966/BS**	**156991/BS**
	Caribbean Green	**156966/VC**	**156991/VC**
	Natural Green New	**156966/VG**	**156991/VG**
	White	**156966/HB**	**156991/HB**
	Sand	**156966/SA**	**156991/SA**
	Light Grey	**156966/GC**	**156991/GC**
	Medium Grey	**156966/GM**	**156991/GM**
	Basalt Grey	**156966/GA**	**156991/GA**

LIQUID



PVC Liquid Premium / Design

Description	Colour	Code
1 litre pot.	Light Blue	**156992/CA**
	Blue	**156992/AB**
	Dark Blue New	**156992/DB**
	Caribbean Green New	**156992/VC**
	Wild Musk	**156992/VM**
	White	**156992/HB**
	Sand	**156992/SA**

Description	Colour	Code
1 litre pot.	Light Grey	**156992/GC**
	Medium Grey	**156992/GM**
	Basalt Grey	**156992/GA**
	Black New	**156992/NB**
	Blue Saphir New	**156992/BS**
	Green Natural New	**156992/VG**
	Transparent	**156992/FTA**

PVC Liquid 3D

Description	Colour	Code
1 litre pot.	Sensitive White	**156992/SSHB**
	Sensitive Sand	**156992/SSSA**

Description	Colour	Code
1 litre pot.	Sensitive Grey	**156992/SSGM**
	Sensitive Black	**156992/SSNB**

ALKORPLAN 200/100 REINFORCED LINER

ALKORPLAN TOUCH

ALKORPLAN TOUCH membrane

Inspired by nature, the designs bring beauty, elegance and character to each pool with a surprising touch, inviting you to caress the surface. This revolution in reinforced membranes for the lining of pools is now available in 3D. Surrender to the appeal of TOUCH and make any pool look spectacular.


Elegance


Relax


Authentic


Vanity


Sublime


Prestige

ALKORPLAN TOUCH colours


Elegance


Relax

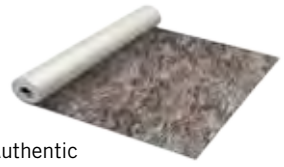
Authentic


Vanity


Sublime

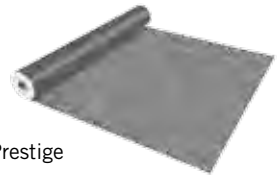
Prestige

New


Origin

Description	Colour	TOUCH 1.65 x 21 m	Antislip 1.65 x 20 m
3D ALKORPLAN TOUCH reinforced membrane inspired by nature	Elegance	**58532**	**66271**
	Relax	**58533**	-
	Authentic	**58534**	-
	Vanity	**67968**	-
	Sublime	**67969**	-
	Prestige	**67970**	-
	Origin New	**74180**	-

ALKORPLAN 200/100 REINFORCED LINER

ALKORPLAN CERAMICS

SLIP RESISTANCE Category C

GUARANTEE 10 years WATERTIGHTNESS

ALKORPLAN CERAMICS reinforced membrane

ALKORPLAN CERAMICS is a reinforced 2-mm embossed membrane for pools that imitates the volume of real glass tiling and its joints to look like a mosaic inspired in Greek mythology.

Advantages:

- Watertightness guaranteed.
- Quick to fit in comparison with glass tiling.
- The ceramic pieces on ALKORPLAN CERAMICS do not fall off.
- Minimum maintenance.
- More resistant and long-lasting thanks to its 2-mm thickness.
- Embossed coating that makes it look like real glass tiling.

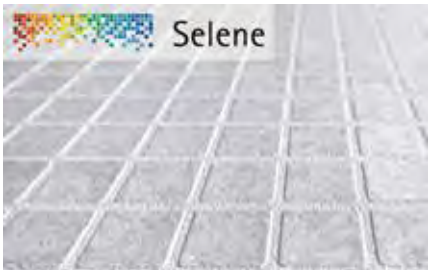



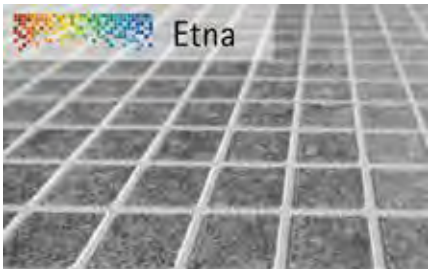



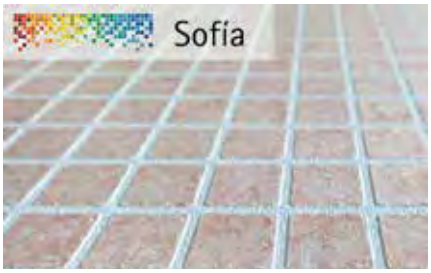



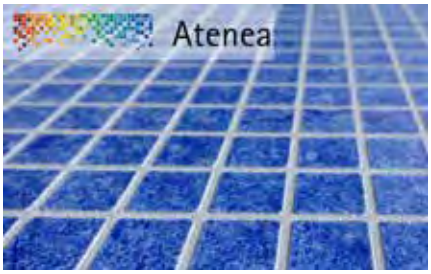







Description	Colour	Width (mm)	Thickness (mm)	Length (mm)	Code
ALKORPLAN CERAMICS reinforced membrane	Sofia	1,65	2,0	21	**70671**
	Atenea	1,65	2,0	21	**70672**
	Selene	1,65	2,0	21	**70674**
	Etna	2,05	2,0	21	**70676**

ALKORPLAN 150/100 REINFORCED LINER

ALKORPLAN XTREME
Pools that stand up to anything!!

ALKORPLAN XTREME membrane

ALKORPLAN XTREME is the only reinforced membrane in the market whose colour is resistant to chlorine and stains, even those that usually form on the waterline.

ALKORPLAN XTREME is a smooth, flexible and robust reinforced membrane, thanks to the most advanced technological developments, and it has been made to resist the wear and tear inherent to the daily use of a pool. It is even resistant if there is a continuous large influx of swimmers in a pool and aggressive chemical products are used to treat it.

Colours

Ice | Sahara | Blue Fresh | Blue | Silver | Vulcano | Onix

NOT TOXIC PRODUCT
Healthier ... Less smoke

COMPATIBLE WITH PLANTS & FISH

Description	Colour	Width (mm)	XTREME	Anti-slip XTREME
ALKORPLAN XTREME reinforced membrane	Ice	1.65	**70199**	**70229**
	Sahara	1.65	**70200**	**70230**
	Blue Fresh	1.65	**70217**	**70232**
	Blue	1.65	**70218**	**70233**
	Silver	1.65	**70222**	**70235**
	Vulcano	1.65	**70223**	**70236**
	Onix	1.65	**70224**	**69392**
	Ice	2.05	**70225**	-
	Blue Fresh	2.05	**70228**	-





ALKORPLAN 150/100 REINFORCED LINER



ALKORPLAN2000 reinforced membrane

Description	Colour	ALKORPLAN2000 1.65 x 25 m	Anti-slip 1.65 x 12.60 m
ALKORPLAN2000 reinforced monochrome membrane, coated in a varnish made of a special formulation that protects it from external wear and tear	Light Blue	**49908**	**66117**
	Adriatic Blue	**49909**	**66115**
	Caribbean Green	**49910**	**66116**
	White	**49911**	**66114**
	Sand	**49912**	**66118**
	Light Grey	**49913**	**66119**
	Dark Grey	**49914**	-

ALKORPLAN3000 membrane

Description	Colour	ALKORPLAN3000 1.65 x 25 m	Anti-slip 1.65 x 12.60 m
ALKORPLAN3000 reinforced decorated membrane, coated in a varnish made of a special formulation that protects it from external wear and tear	Byzanz Blue	**49916**	-
	Mosaic	**49918**	-
	Carrara	**49919**	**52611**
	Marble	**49920**	-
	Blue Persia	**49921**	**67283**
	Sand Persia	**49907**	-
	Black Persia	**60612**	-
	Platinum	**49922**	-

AlkorPlan2000 / AlkorPlan3000 colours


Light Blue

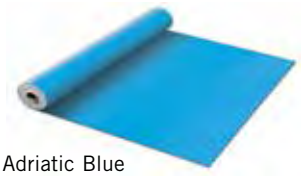
Adriatic Blue

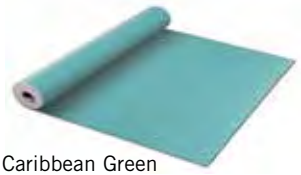
Caribbean Green


White


Sand


Light Grey


Dark Grey


Byzanz Blue

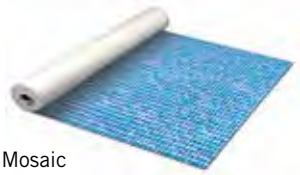
Mosaic


Carrara


Marble

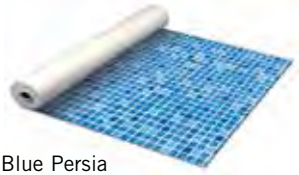
Blue Persia

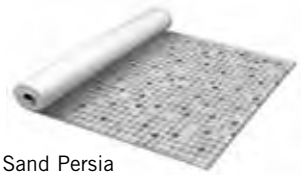
Sand Persia

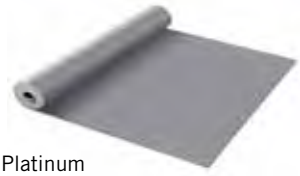
Platinum

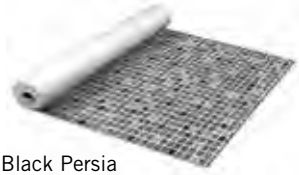
Black Persia

ALKORPLAN LINER ACCESSORIES



ALKORPLUS weld sealant for the ALKORPLAN 2000 and 3000 ranges

Description	Colour	AlkorPlan 2000 and 3000 liquid PVC
Liquid PVC ALKORPLUS for sealing joints (1 litre tins/pack of 6 tins)	Light Grey	**23600**
	Dark Grey	**52619**
	Caribbean Green	**52620**
	White	**52622**
	Transparent	**52623**
	Light Blue	**52624**
	Adriatic Blue	**12284**
	Sand	**52626**
	Platinum	**52627**



ALKORPLUS TOUCH weld sealant

Specifically for fitting ALKORPLAN TOUCH membranes. Made using an innovative formulations that makes it more resistant to ageing and fading, thus prolonging the pool's service life and its perfect appearance by many years.

Description	Colour	Code
Liquid PVC ALKORPLUS TOUCH for sealing welds	Elegance	**60613**
	Relax	**60614**
	Authentic	**60615**
	Vanity	**67971**
	Sublime	**67972**
	Prestige	**67973**
	Origin New	**74181**



ALKORPLAN XTREME weld sealant

Description	Colour	Code
ALKORPLAN XTREME weld sealant (1 litre tins/pack of 6 tins)	Ice	**70266**
	Sahara	**70268**
	Blue Fresh	**70270**
	Blue	**70272**
	Silver	**70273**
	Vulcano	**70274**
	Onix	**69391**



ALKORPLAN CERAMICS weld sealant

Description	Colour	Code
Liquid PVC ALKORPLAN CERAMICS for finished welds (900 g tins/pack of 6 tins)	White	**70678**

ALKORPLAN LINER ACCESSORIES



Sealant ALKORFIX MS-Polymer based multipurpose fixer

Complete range of MS-polymers in different colours in order to be combined with all our reinforced pool liners **TOUCH** and with most of our other ranges.

MS-polymers not only serve to seal the membrane with the pool coping but also to chemically mount the anchoring to the walls provided that there is a mechanical mounting. It is also suitable for provisional repairs when the pool is filled.

Description	Contents (ml/drum*)	Packaging	Colour	Code
Ms-polymer based multipurpose fixern TOUCH Relax, 2000 Sand and XTREME Sahara	300	12 units per box	Sand	**72726**
Ms-polymer based multipurpose fixern TOUCH Vanity, 2000 White, XTREME Ice and ranges 3000 and CERAMICS	300	12 units per box	White	**72727**
Ms-polymer based multipurpose fixer TOUCH Sublime and TOUCH Authentic	300	12 units per box	Travertino	**72728**
Ms-polymer based multipurpose fixer TOUCH Prestige, XTREME Silver, 2000 Light Grey and 3000 Platinum	300	12 units per box	Light Grey	**72729**



ALKORPLAN geotextile fungicide

Felt made up of 400 g/m^2 light blue heat-welded polypropylene fibres treated with metal ion anti-bacterial organic additives to act as a stable fungicide. It is used as a protective layer between the ALKORPLAN membrane and the pool surface to prevent the proliferations of bacteria, fungi and micro-organisms, as well as imitating the irregular embossed surfaces that the pool may have had before fitting the liner. Bathers also find the bottom of the pool much more pleasant when they walk on the membrane.

Description	Width	LENGTH	Colour	Code
ALKORPLAN geotextile fungicide of 400 g/m^2 for butt welding	1.50 m	50 m	Light Blue	**69179**
ALKORPLAN geotextile fungicide 400 g/m^2	1.65 m	50 m	Light Blue	**66381**
ALKORPLAN geotextile fungicide 400 g/m^2	2.00 m	50 m	Light Blue	**66382**

LINER ACCESSORIES

EASYCOLOR - Inlet Sheath

This new kit of inlet sheath allows to change the color, both the embellisher and the floater. This sheath could be installed without change the skimmer mouth what is very practical to renew or upgrade pools. This kit includes inlet sheath, floater, flanges and embellisher.



73166CL090



73166CL144



73166CL129

EASYCOLOR - Inlet Sheath

New

Compatible with skimmer items 30866, 30867, 73158, 73159, 73160 , 73161, 73162 and 73163.

	Code	Standard Pack	Standard Weight in kg	Standard Volume in m^3
Beige - inlet sheath	**73166CL090**	1	1.22	0.02
Light grey - inlet sheath	**73166CL129**	1	1.22	0.02
Anthracite grey - inlet sheath	**73166CL144**	1	1.22	0.02



74035CL090



74035CL1144



74035CL129

EASYCOLOR - Inlet Sheath

New

Compatible with skimmer items 00251, 00252, 01463, 01464, 11304, 11305, 11311, 11313, 11314 and 11317.

	Code	Standard Pack	Standard Weight in kg	Standard Volume in m^3
Beige - inlet sheath	**74035CL090**	1	1.22	0.022
Light grey - inlet sheath	**74035CL129**	1	1.22	0.022
Anthracite grey - inlet sheath	**74035CL144**	1	1.22	0.022



Skimmer Adaptor: Skimmer Solution

The skimmer adaptor replaces the need to remove the previous skimmer, as it is inserted into the previous skimmer and sealed using ABS glue or marine silicone. It is only suitable for skimmers with an internal opening of 140 mm x 201 mm

Code	Standard Pack	Standard Weight in kg	Standard Volume in m^3
55977	1	1.3	-

LINER ACCESSORIES

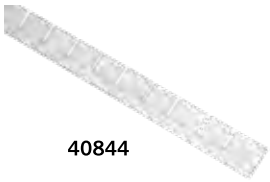
40844


05819
05815


05816

Fastening accessories for liners 75/100° for pools under construction

	Code	Standard Pack	Standard Weight in kg	Standard Volume in m³
Horizontal Hung PVC 1.5 m x 50 mm (free form)	**40844**	-	-	-
Horizontal hung PVC 2 m x 50 mm	**05815**	-	-	-
Horizontal hung PVC 2 m x 38 mm	**09492**	-	-	-
Angle PVC radius of 15 cm x 50 mm	**05819**	-	-	-
Angle PVC radius of 15 cm x 38 mm	**09493**	-	-	-
In Aluminium				
Horizontal hung ALU 2 m x 50 mm	**05816**	-	-	-
ALU angle 50 mm (radius of 15 cm)	**05818**	-	-	-
Fastening rivets (Box of 250 units)	**05820**	-	-	-
Flexible fastening strip. Lineal metre	**05825**	-	-	-


05817 16175


05825
05820

Fastening accessories for liners 75/100° for pool renovation

	Code	Standard Pack	Standard Weight in kg	Standard Volume in m³
Vertical hung PVC 2 m	**05817**	-	-	-
Angle for vertical fastening (radius 15 cm)	**16194**	-	-	-
In Aluminium				
Vertical hung ALU 2 m	**16175**	-	-	-
Fastening rivets (Box of 250 units)	**05820**	-	-	-
Flexible fastening strip. Lineal metre	**05825**	-	-	-

LINER ACCESSORIES



Accessories for liners 150/100°

	Code	Standard Pack	Standard Weight in kg	Standard Volume in m³
Galvanized plate band (2 x 0.05 m)	**32324**	-	-	-
Applicator bottle (unit)	**05780**	-	-	-
Band (8 mm)	**05781**	-	-	-
Solvent THF (1 litre)	**05778**	-	-	-
Solvent THF (5 litres)	**05779**	-	-	-
Neoprene glue for PVC (5 Kg)	**05784**	-	-	-

Note: In the event of assembling a liner 150/100° by hung type fastening with an 8 mm strip, the accessories are the same as for liners 75/100° (see next page).



Adhesives for all types of liners

	Code	Standard Pack	Standard Weight in kg	Standard Volume in m³
Adhesive for antibacterial protection (Tin 5 Kg)	**25748**	-	-	-
Komerling adhesive 1220 (Tube 125 ml)	**06655**	-	-	-
Komerling adhesive 1220 (Tin 750 ml)	**06656**	-	-	-



Liner protection for 75/100° and 150/100°

	Code	Standard Pack	Standard Weight in kg	Standard Volume in m³
Protection 300 gr/m² AB blue (roll 100 m²)	**16176**	-	-	-



Rivets

Aluminium rivets.

	Code	Standard Pack	Standard Weight in kg	Standard Volume in m³
Short 15.5 - 4.5 mm	**12264**	4	8.85	0.01
25 x 4,8 mm	**53795**	3	8.0	0.01



Double PVC hem

Welded to the edge of the liner, allows the liner to attach to the pool shell, by using the corresponding profile.

Code	Standard Pack	Standard Weight in kg	Standard Volume in m³
12184	250 m	9.0	0.036



ALKORCLEAN waterline degreaser and ALKORPLUS stain remover

The ALKORCLEAN degreaser is recommended for removing grease from the waterline, while the ALKORPLUS stain remover neutralises metal ions in the water such as copper.

The ALKORPLUS stain remover is a liquid to prevent stains by preventing dirt forming on the waterline.

	Code	Standard Pack	Standard Weight in kg	Standard Volume in m³
ALKORCLEAN waterline degreaser	**55976**	-	-	-
Alkorplus stain remover	**53898**	-	-	-

Consult us for pools of different designs and shapes

CLASSIFICATION OF LINERS DEPENDING ON THE POOL

Standard pool liners 75/100°

Solid colour models	Code
Light Blue	09278
France blue	09277
Caribbean Green	09281
white	09279
Sand	16131

Printed colour models	Code
Servanne	26668
Mosaic	09280
Blue Marble	16132
Green Marble	16132V
Sand Marble	16132A
Byzantium blue	26669
Byzantium green	26670

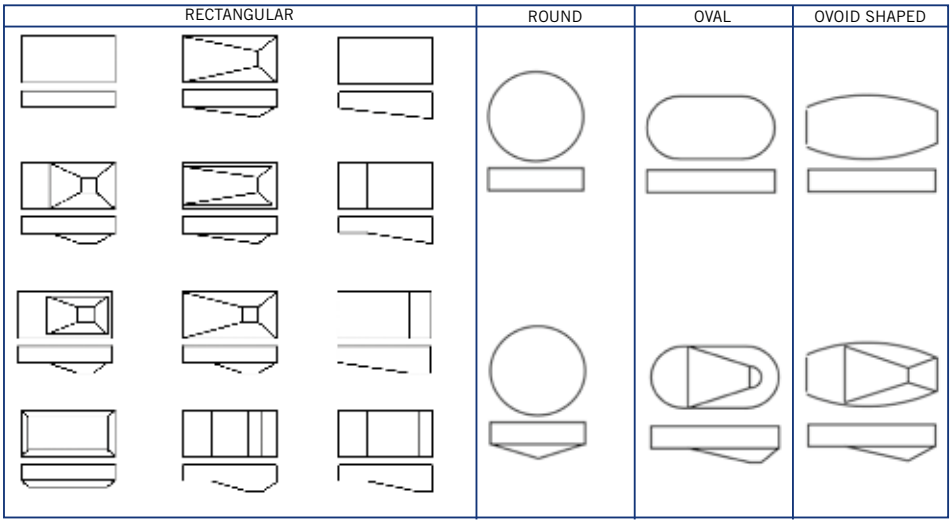

Non-standard pool liners 75/100°

Solid colour models	Code
Light Blue	05810
France blue	05809
Caribbean Green	05813
White	05811
Sand	16137

Printed colour models	Code
Servanne	26686
Mosaic	05812
Blue Marble	16138
Green Marble	16138V
Sand Marble	16138A
Byzantium blue	26678
Byzantium green	26679

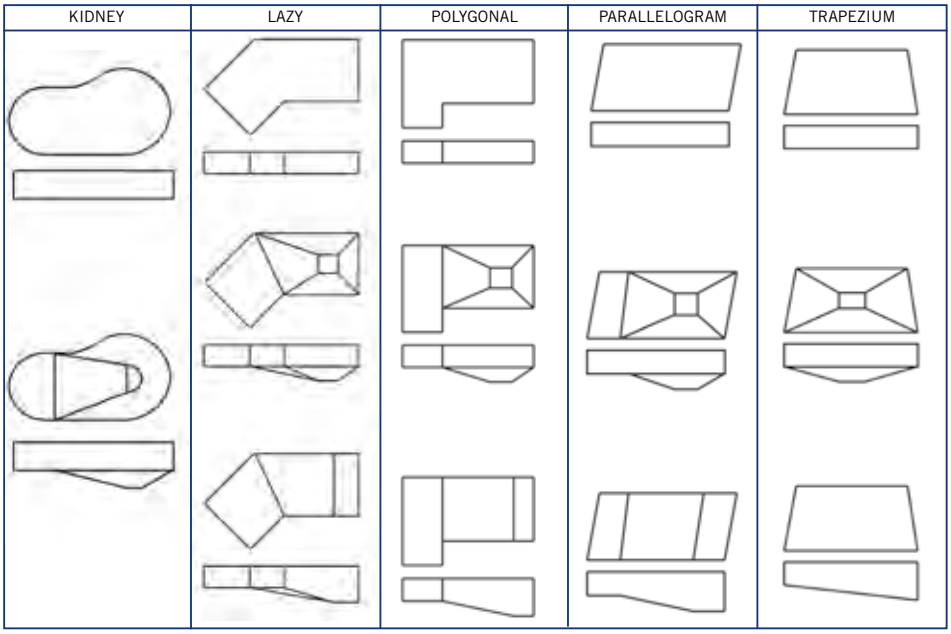

LINERS FOR STAIRS

For steps that do not fit the Standard models shown here, request quote.

Below we provide you with the details of the shapes and models you can choose from plain or printed liners to ensure you select the correct liner for your pool steps. Steps that are fitted along the breadth of the basin are invoiced in accordance with the standard model STRAIGHT as long as the width does not exceed 4 meters. Attention: the size of the basin should not include the depth of the steps.

Standard steps

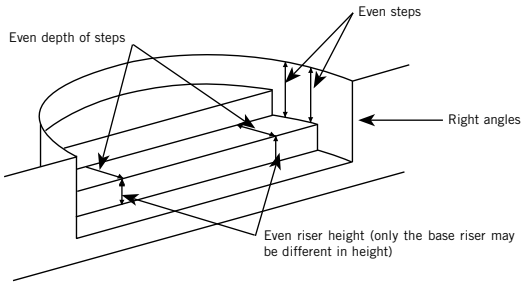

Non Standard steps

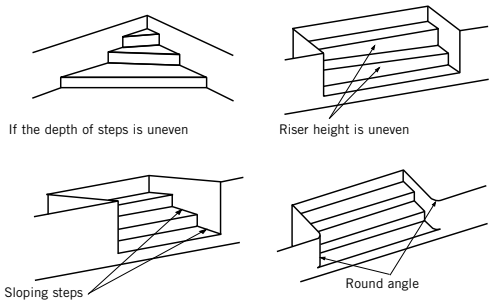

Steps		Plain Liner	Plain Liner + Bands	Diagram
Shape	**Widths**	**Code**	**Code**	
Straight	0 to 2 meters	**05789**	**05789B**	
	3 to 4 meters	**05791**	**05791B**	
Roman	0 to 2 meters	**16163**	**16163B**	
	2 to 3 meters	**25868**	**25868B**	
	3 to 4 meters	**05800**	**05800B**	
Right angle	0 to 2 meters	**05803**	**05803B**	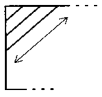
	2 to 3 meters	**05804**	**05804B**	
¼ Circle	0 to 2 meters	**16167**	**16167B**	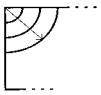
	2 to 3 meters	**089443**	**089443B**	

Steps		Printed Liner	Printed Liner + Bands	Diagram
Shape	**Widths**	**Code**	**Code**	
Straight	0 to 2 meters	**05794**	**05794B**	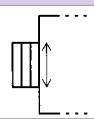
	2 to 3 meters	**05795**	**05795B**	
	3 to 4 meters	**05796**	**05796B**	
Roman	0 to 2 meters	**16169**	**16169B**	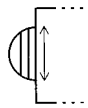
	2 to 3 meters	**05801**	**05801B**	
	3 to 4 meters	**05802**	**05802B**	
Right angle	0 to 2 meters	**05806**	**05806B**	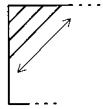
	2 to 3 meters	**05807**	**05807B**	
¼ Circle	0 to 2 meters	**16173**	**16173B**	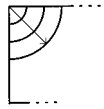
	2 to 3 meters	**089446**	**089446B**	

CONDITIONS FOR ACCEPTING AN ORDER

Note: The colours shown in the catalogue are approximate

Order:

All orders or enquiries for modifying orders must be made in writing.
For avoiding any delay, the client, at his own risk, must forward the supplier all the necessary liner measurements for executing the work. In case the information supplied by the client is insufficient, he will have to supply the missing information ahead of the manufacturing time.

Implicit data:

If the following information is not supplied in writing with the order, we shall consider the below mentioned data for the liner manufacture:

* Vertical radii of 15 cm.
* Horizontal radii of a maximum of 5 cm (in the pool shell only). Hung-type fastening system.
* The horizontal measurements taken from the pool shell.
* The depth measurements taken from the lower part of the pool's coping stone to the base of the wall.
* The diagonal measurements taken of the right angles, not of the radii.

To avoid certain misunderstandings, we suggest you take the following precautions:

For holding the liner:
* Specify the type (hung, overlap or V-fasteners); we anticipate that an additional 15 cm of material will be required for the walls if the overlap fastening system is used.

For steps:
* Check whether the angles between the step tread and rise (flat and vertical step surfaces) are truly rectilinear.
* Installation of a discharge nozzle in the middle of the first step is highly recommended for holding the liner in place.
* At least 30 cm of water should be left in the pool for maintaining the first step.
* Avoid designing staircases having more than 5 steps.
* To confirm dimensions, give the lengths of each step.
* Check the verticality of pool walls. In case of deficient plumbness, enquire about the order viability.
* Compound inclination safety ledges should be avoided on the liner.

Taking measurements:

Provide the total lengths and widths.
* All heights of the pool shell.
* Width of the safety step on each side.
* Specify the peripheral size of each side.
* Provide the measurements of each corner and slope.
* All dimensions should be provided with horizontal and/or vertical measurements.

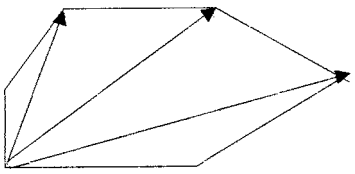

If angles are not straight:

* Measure all of the diagonals from a single point.
* The diagonals of the right angles are only required for irregular shaped pools without right angles.

Calculation of arcs of circles:

* The arcs of circles are calculated by their radius.
* If the radius has not been calculated, a template must be used or the triangulation must be calculated to specify it.
* Ellipses are calculated using templates (or a grid plan made at intervals of approximately 1 m).

Sectional views:

* Three views are recommended: a top view, a front view and a side view.

Templates:

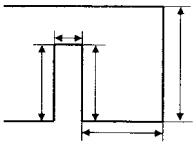

* Make templates for the sky and water sides (or one view).
* Templates are made for the pool's shell or cover.

Shuttering:

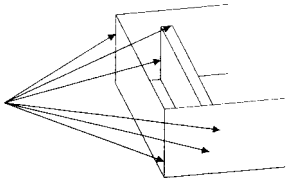

* Specify the measurements of the shuttering as shown in the diagram.
* Check that the inside vertical angles of the shutterings are straight.
* Check that vertical pool shell angles shuttering are in a straight line.
* Check that the horizontal angle of the wall and shuttering are in a straight line.



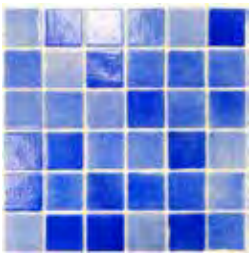

NIEBLA AZUL 5x5
31 x 31 cm / 13.15" x 13.15"
NIAZ50Y NIEBLA

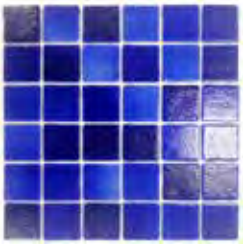

NIEBLA FUERTE 5x5
31 x 31 cm / 13.15" x 13.15"
NIFU50Y NIEBLA



NIEBLA PISCINA 5x5
31 x 31 cm / 13.15" x 13.15"
NIPI50Y NIEBLA



NIEBLA MENTA 5x5
31 x 31 cm / 13.15" x 13.15"
NIME50Y NIEBLA

BLANCO 5x5
31 x 31 cm / 13.15" x 13.15"
BNCO50Y LISO

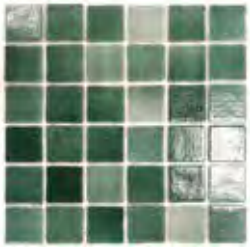

503 5x5
31 x 31 cm / 13.15" x 13.15"
050350Y NIEBLA

New

5X5 UNNION
POLYURETHANE SYSTEM



Does not invade the joints

Resistance

Flexibility

Excellent Grip

Durability

Easy intallation

GLASS TILING FOR POOLS

Pearl


54160


57371


62312

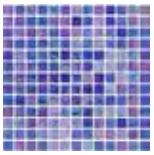
67497


67498


54160

Blue mix

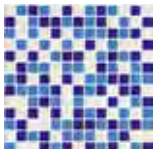
54357


61291

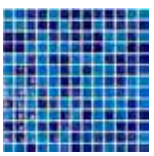
54417

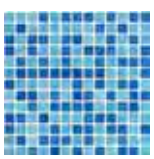
54372


54372

GLASS TILING FOR POOLS

Lagoon effect

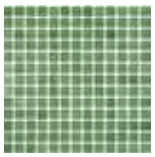
54314


54313


54312


63141


63141

Beach effect


54316


54324

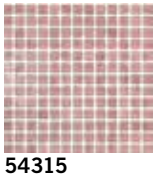
54315


64359 (Matt - C3)


54324

GLASS TILING FOR POOLS

Stone effect

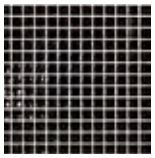
54398


54328


54344

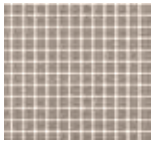
54231 (Matt - C3)


54328

White

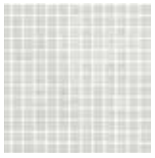
60020

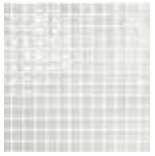
54369

54256 (Matt - C3)


54369

GLASS TILING FOR POOLS

Anti-slip


54282 (Matt - C3)

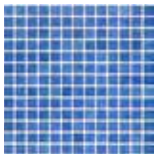
54278 (Matt - C3)

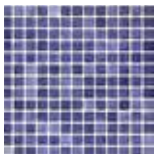
54279 (Matt - C3)



Blue


54403


54399

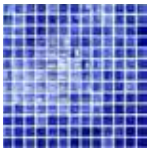
54400


54365

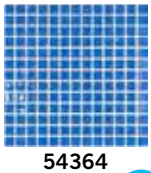
54364

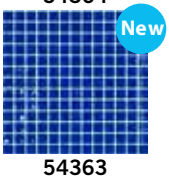

54363



GLASS TILING FOR POOLS

Premium Pearl Finish Mix



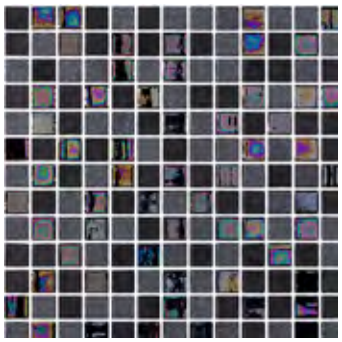

33% MA09 / 33% MT05 / 33% G312

TOKIO
33.4 x 33.4 cm / 13.15" x 13.15"
TOKY25Y

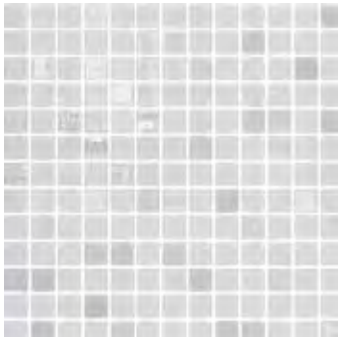

80% BLANCO / 20% G305

MONTREAL
33.4 x 33.4 cm / 13.15" x 13.15"
MONT25Y



33% G305 / 33% MT04 / 33% NIEBLA BLANCO

PARIS
33.4 x 33.4 cm / 13.15" x 13.15"
PARI25Y



33% MA13 / 33% MT07 / 33% G329

MILAN
33.4 x 33.4 cm / 13.15" x 13.15"
MILA25Y

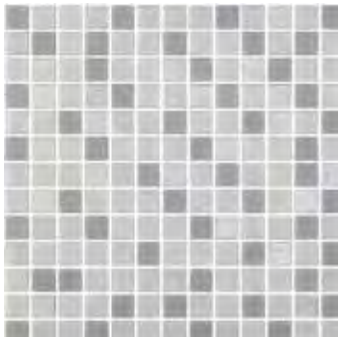

33% NIEBLA BLANCO / 33% MT01 / 33% G328

SYDNEY
33.4 x 33.4 cm / 13.15" x 13.15"
SYDN25Y



33% MT01 / 33% G311 / 33% BLANCO

BOSTON
33.4 x 33.4 cm / 13.15" x 13.15"
BOST25Y



33% MA14 / 33% MT08 / 33% G330

DURBAN
33.4 x 33.4 cm / 13.15" x 13.15"
DURB25Y

GLASS TILING FOR POOLS

Premium Pearl Finish Mix

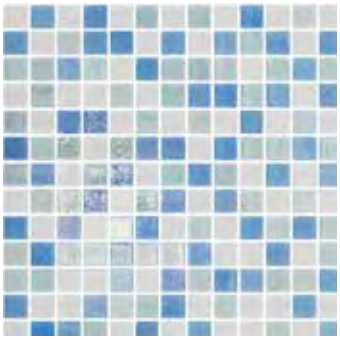

33% G322 / 33% G320 / 33% BLANCO

BALTIC
33.4 x 33.4 cm / 13.15" x 13.15"
BALT25Y



33% G322 / 33% G305 / 33% NIEBLA FUERTE

ADRIATIC
33.4 x 33.4 cm / 13.15" x 13.15"
ADRI25Y



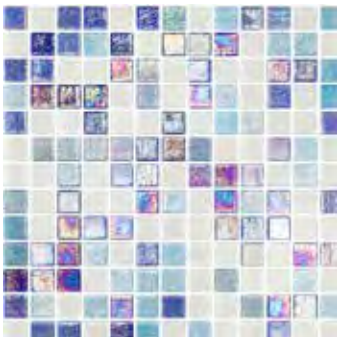

33% G325 / 33% G322 / 33% NIEBLA BLANCO

ARTIC
33.4 x 33.4 cm / 13.15" x 13.15"
ARTI25Y

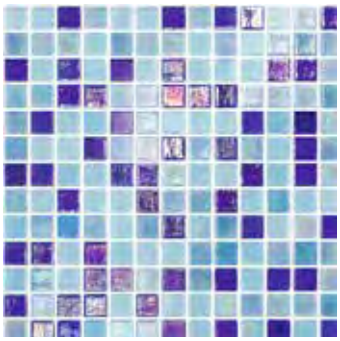

33% G325 / 33% G322 / 33% NIEBLA PISCINA

PACIFIC
33.4 x 33.4 cm / 13.15" x 13.15"
PACI25Y

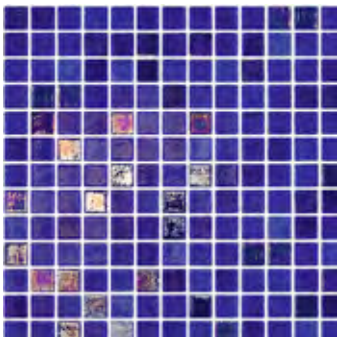

20% G325 / 80% NIEBLA FUERTE

INDICO
33.4 x 33.4 cm / 13.15" x 13.15"
INDI25Y



33% G320 / 33% MT04 / 33% G328

BALI
33.4 x 33.4 cm / 13.15" x 13.15"
BALI25Y



33% G320 / 33% G305 / 33% NIEBLA MENTA

BAHAMAS
33.4 x 33.4 cm / 13.15" x 13.15"
BAHA25Y





80% 202 / 20% G326

MURANO
33.4 x 33.4 cm / 13.15" x 13.15"
MURA25Y



60% 203 / 20% G326 / 20% 211

BAHIA
33.4 x 33.4 cm / 13.15" x 13.15"
BAHI25Y



20% G320 / 80% NIEBLA MENTA

MARTINIQUE
33.4 x 33.4 cm / 13.15" x 13.15"
MART25Y

GLASS TILING FOR SPAS AND WELLNESS FACILITIES

Sixties





WHITE
32 X 29 cm / 12,60" x 11,42"
WHIT60F



GREY
32 x 29 cm / 12,60" x 11,42"
GREY60F



TURQUOISE
32 x 29 cm / 12,60" x 11,42"
TURQ60F



BLUE
32 x 29 cm / 12,60" x 11,42"
BLUE60F

Examples of projects carried out using a 5 x 5 finishes

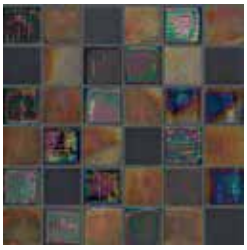

GOLD
31 x 31 cm / 12,20" x 12,20"
GOLD50F



OXID
31 x 31 cm / 12,20" x 12,20"
OXID50F



STEEL
31 x 31 cm / 12,20" x 12,20"
STEE50F

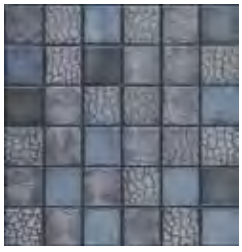

HERMES
31 x 31 cm / 12,20" x 12,20"
HERM50F



GLASS TILING: PROJECTS

Customized projects



We create drawings and designs in the shapes and colours of your choice. The limits are in your imagination!

Luminescent



Our luminescent mosaic is ideal for signage. It shines in the dark!

LU0125Y2
BLUE
33,4 x 33,4 cm
13,15" x 13,15"

LU0225Y2
GREEN
33,4 x 33,4 cm
13,15" x 13,15"

GLASS TILING: TECHNICAL SPECIFICATIONS

Packing list

PLAIN / FOG / TOGAMA MIX / MATT - NON-SLIP / PEARL / LUMINESCENT/DRAWINGS*

Packaging list	Dimensions/Plate	m² / Box	Kg / Box	Box / Pallet	m² / Pallet	Kg / Pallet
2.5 x 2.5 cm	33.4 x 33.4 cm	2	18	72	144	1311
5 x 5 cm	30.7 x 30.7 cm	2	22	54	108	2003
Sixties	32.5 x 29.4 cm	1	11	54	54	604

Technical specifications

Standard	Description of standard	Plain	Fog	Non-slip matt	Pearl
UNE-EN 10545-3:1997	Water absorption	< 0,10%	< 0,10%		< 0,10%
UNE-EN 10545-12:1997	Scratch resistance	Resistant	Resistant	Resistant	Resistant
UNE-EN 10545-13:1997	Chemical resistance	UA/ULA/UHA	UA/ULA/UHA	UA/ULA/UHA	UA/ULA/UHA
UNE-EN 10545-14:1998	Stain resistance	Class 5	Class 5		Class 5
UNE 67-101:1985+1M:92	Mohs scale resistance to surface scratching	4	4	7	5
UNE-ENV 12633:2003 ANNEX A	Resistance to slipping (Pendulum)			Class 3	
DIN 51130:2010 Section 5	Critical angle of displacement (ramp)			R11	
DIN 51097:1992	Critical slip angle in wet areas where people walk barefoot			Class C	
ISO/DIS 10545-17:1998 ANNEX A	Dynamic friction coefficient (Tortus)			Excellent	

Recycled product - Sustainable product

ENVIRONMENTAL PRODUCT SELF-DECLARATION Pursuant to UNE-EN ISO 14021

1m² of glass mosaic tiling (including mesh)	Brand
Total solid content (kg/m²)	9.97
Content of solid virgin matter	1.25
Minimum content of after-consumption recycled material (kg/m²)	8.72
MINIMUM CONTENT OF RECYCLED MATERIAL (%) [X = A / A.P.100]	87.4

Finishes - Polyurethane knit

UNNION POLYURETHANE SYSTEM

- Resistance
- Durability
- Does not get into joints
- Flexibility
- Easy to place
- Excellent grip

MADE IN SPAIN

87 %

* The borders and patterns are on paper. (Once applied to the mosaic tiling the paper must be removed).



COVERS AND ROLLERS

Thermal and protective covers

303 • Thermal covers - Bubble
304 • Premium thermal covers for summer
305 • Thermal covers - Foam
306 • Protection covers for winter
307 • Pool cover accessories
307 • Reinforced PVC protection covers
309 • Storage rollers for covers

Automatic covers

312 • General information
314 • Above-ground models
318 • In-ground models
323 • Demonstration models
327 • PVC slats
328 • Step slats
329 • Polycarbonate slats and steps
330 • Liner accessories
331 • Wireless remote controls with key
332 • Manufacturer's specifications
333 • Technical specifications

AUTOMATIC COVERS: COMPARISON

Model comparison

	Above-ground		In-ground				
	N-Carlit		Dry decking			In-ground decking	
	N-Carlit	N-Carlit Solar	Roussillon Dry well	Roussillon Motor in the shaft	Roussillon Motor at water level	Roussillon Dry well	Roussillon Motor in the shaft
							
Maximum dimensions (m)	14 x 7.5	12 x 6	20 x 11	12 x 8	12 x 6	Consult	Consult
Power	Supply	Solar	Supply	Supply	Supply	Supply	Supply
Warranty (motor and distribution board)	3 years	3 years	5 years	4 years	4 years	5 years	4 years
Safety (NFP 90-308 compliant)	✓✓✓✓	✓✓✓✓	✓✓✓✓	✓✓✓✓	✓✓✓✓	✓✓✓✓	✓✓✓✓
Energy savings	✓✓✓✓	✓✓✓✓	✓✓✓✓	✓✓✓✓	✓✓✓✓	✓✓✓✓	✓✓✓✓
User-friendly	✓✓✓✓	✓✓✓✓	✓✓✓✓	✓✓✓✓	✓✓✓✓	✓✓✓✓	✓✓✓✓
Stylish	✓✓	✓✓	✓✓✓✓	✓✓✓✓	✓✓✓✓	✓✓✓✓	✓✓✓✓
Installation in existing pool	✓✓✓	✓✓✓✓	✓✓	✓✓	✓✓	✓✓	✓✓
Installation in new-build pool	✓✓✓✓	✓✓✓✓	✓✓✓✓	✓✓✓✓	✓✓✓✓	✓✓✓✓	✓✓✓✓
PVC slats can be fitted	✓✓✓✓	✓✓✓✓	✓✓✓✓	✓✓✓✓	✓✓✓✓	✓✓✓✓	✓✓✓✓
Polycarbonate slats can be fitted	✓✓✓✓	✓✓✓✓	✓✓✓✓	✓✓✓✓	✓✓✓✓	✓✓✓✓	✓✓✓✓

* Only motor

Accessories appear on page 307 of the catalogue

THERMAL COVERS - BUBBLE



Blue-blue bubble



Blue-black bubble

Floating Isothermal "Bubble" Covers

- **Composition:** Polyethylene-based material.
- **Joint**: Ultrasonic welding.
- **Edges:** Sewn polyethylene trims.
- **NB model:** Cut only - no trim.
- **Eco model:** Trimmed on both width sides
- **Deluxe model:** Perimeter trim.
- **Fastening:** Eyelets at either end on primary width side.
  Eyelets approx. every 65 cm on secondary width side.
- **Composition:** Nickel-plated brass eyelet.
- **Packaging:** Supplied in a cardboard box with a protective cover and instruction handbook.
- **Thickness:** 400 µm.

Model	Pool Type	Code	Standard Pack	Standard Weight in kg	Standard Volume in m^3
NB Blue	Standard	**09296**	-	-	-
Eco Blue	Standard	**09294**	-	-	-
Eco Blue	Freeform	**06214**	-	-	-
Deluxe Blue	Standard	**09295**	-	-	-
Deluxe Blue	Freeform	**03975**	-	-	-
Deluxe Blue-Black	Standard	**16185**	-	-	-
Deluxe Blue-Black	Freeform	**11483**	-	-	-



NB



ECO



Luxe

Steps and accessories bubble models

	Code	Standard Pack	Standard Weight in kg	Standard Volume in m^3
Straight stairs fixed price	**06215**	-	-	-
Roman stairs fixed price	**06217**	-	-	-
Other stairs fixed price	**06218**	-	-	-
Special cut pieces for stairs	**03976**	-	-	-
Additional nickel-plated brass eyelet	**04001**	-	-	-

PREMIUM THERMAL COVERS FOR SUMMER

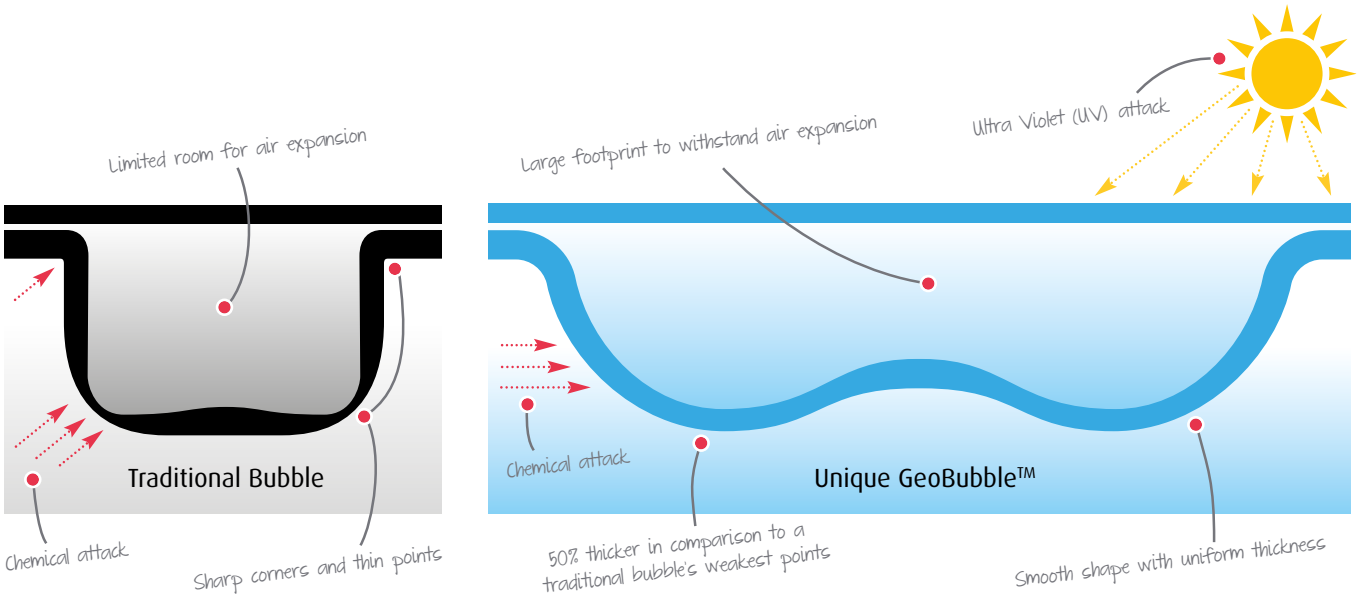

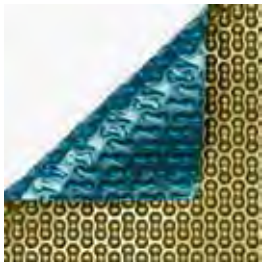

GeoBubble 500 µm model - Dark blue/Gold

	Pool Type		
	Standard shape	Non-Standard	Freeform
Without border	075549	075550	075551
Duo	075552	075553	075554
Luxe	075555	075556	075557

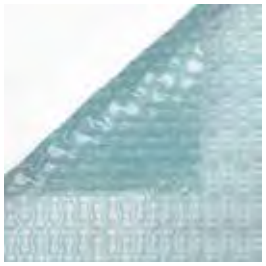

GeoBubble 500 µm model -Sun+Guard

	Pool Type		
	Standard shape	Non-Standard	Freeform
Without border	075558	075559	075560
Duo	075561	075562	075563
Luxe	075536	075537	075538



GeoBubble 500 µm model - EnergyGuard

	Pool Type		
	Standard shape	Non-Standard	Freeform
Without border	075564	075565	075566
Duo	075567	075568	075569
Luxe	075570	075571	075572

Ladders for GeoBubble 500 µm models

	Code	Standard Pack	Standard Weight in kg	Standard Volume in m^3
Straight stairs	**079833**	-	-	-
Roman stairs	**079834**	-	-	-
Other stairs	**079835**	-	-	-

Accessories appear on page 307 of the catalogue

PREMIUM THERMAL COVERS FOR SUMMER

Standard pool types

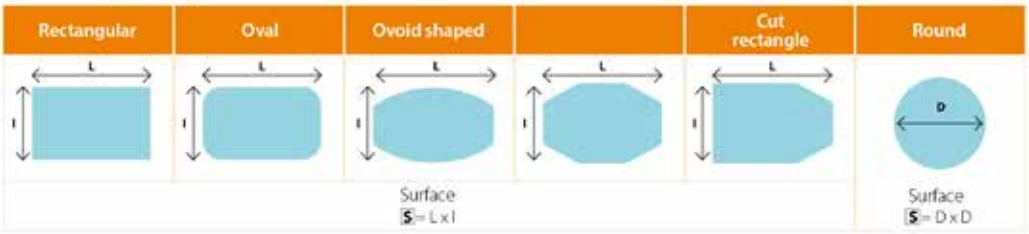

Freefrom pool types

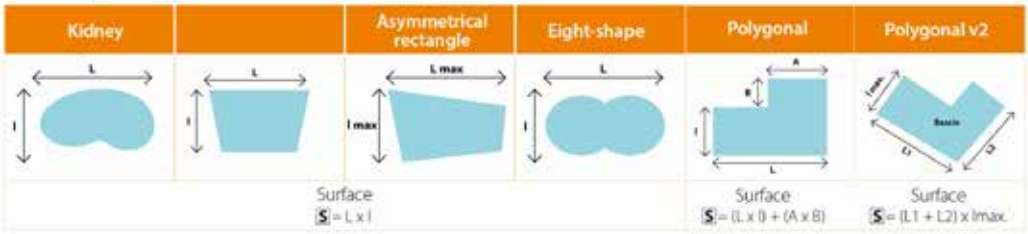

Freeforms

Any non-standard shape requiring a template for manufacture will be considered free-form.

Describes the basin shape in a rectangle; L is length and I is height.
Surface area: S = L x I

Shapes must be measured correctly for adaption to established templates. If the basin is free-form and standard templates cannot be used, an additional amount will be applied.

Templates must be checked in-factory and with the lines perfectly visible in order to prevent against misinterpretations.

Price calculation

B x Price / m²
+ Ladder
+ Cut-out
+ Transport
= Total PRICE

THERMAL COVERS - FOAM



FOAM

Classification: Covers are classified as standard, non-standard or free-form, based on the different shapes defined in the catalogue.

- **Eco models are trimmed on both width sides.**
- **Deluxe models have a perimeter trim.**

5 mm foam model

Composition: Material based on cross-linked polyethylene foam.

- **Joint:** Thermal welding with double-sided polyethylene tape.
- **Edges:** Sewn PVC trim.
- **Eco model:** Trimmed on both width sides
- **Deluxe model:** Perimeter trim.
- **Fastening:** Eyelets at either end on primary width side.
  Eyelets approx. every 65 cm on secondary width side.
- **Composition:** Nickel-plated brass eyelet.
- **Option:** Polyethylene foam floating reinforcement on width side.
- **Packaging:** Supplied rolled up with a protective cover.
- **Thickness:** 5 mm.

	Pool Type	Code	Standard Pack	Standard Weight in kg	Standard Volume in m³
Eco Model	Standard	**09297**	-	-	-
	Non-standard	**03983**	-	-	-
	Freeform	**03992**	-	-	-
Deluxe Model	Standard	**09298**	-	-	-
	Non-standard	**03991**	-	-	-
	Freeform	**03984**	-	-	-

+ info PDB Product Database
Further information on **PRODUCTS**
www.astralpool.com

PROTECTION COVERS FOR WINTER

Attention: Unless specified in the order, the stair cover is supplied welded to the pool cover, applying the corresponding surcharge.

Steps and various foam models

	Code	Standard Pack	Standard Weight in kg	Standard Volume in m^3
Straight stairs fixed price	**06215M**	-	-	-
Roman stairs fixed price	**06217M**	-	-	-
Other stairs fixed price	**06218M**	-	-	-
Special cut pieces for stairs	**03993**	-	-	-
Additional nickel-plated brass eyelet	**04001**	-	-	-



BLUE INTERSUP

PVC Intersup opaque model - blue/ivory

	Pool Type	Code	Standard Pack	Standard Weight in kg	Standard Volume in m^3
Eco Model	Standard	**09338**	-	-	-
	Freeform	**06198**	-	-	-
Deluxe Model	Standard	**09339**	-	-	-
	Freeform	**06208**	-	-	-



BLUE LUXE INTERSUP

PVC Intersup opaque model - green/ivory

	Pool Type	Code	Standard Pack	Standard Weight in kg	Standard Volume in m^3
Eco Model	Standard	**09526**	-	-	-
	Freeform	**09528**	-	-	-
Deluxe Model	Standard	**09529**	-	-	-
	Freeform	**09531**	-	-	-

Steps and others for Intersup models

	Code	Standard Pack	Standard Weight in kg	Standard Volume in m^3
Straight stairs fixed price	**05755**	-	-	-
Roman stairs fixed price	**05756**	-	-	-
Other stairs fixed price	**06219**	-	-	-
Special cut pieces for stairs	**03869**	-	-	-
Additional nickel-plated brass eyelet	**04001**	-	-	-

TECHNICAL SHEET
Intersup Eco Covers

Composition	580 g/m^2 double-sided coated PVC fabric.
Joints	High frequency welding.
Borders	Perimeter fold joined by high frequency weld
Fixing	using pairs of nickel-plated brass eyelets + Double pressed tensor rubber + S.S. anchoring fixture Distance between rubber tensors = 70 cm Distance between eyelets = approx. 20 cm
Grille	Centrally located drainage grid screen in pre-shrunk PVC fabric joined by high frecuency welding
Packaging	Supplied in a cardboard box with an instruction handbook.

TECHNICAL SHEET
Deluxe Intersup Covers

Composition	580 g/m^2 double-sided coated PVC fabric.
Joints	High frequency welding.
Borders	Perimeter fold joined by high frequency weld
Fixing	With straps + Dynamometric tensor + S.S. anchoring fixture Separation between tape - approx. 1 m. Overlap - 50 cm
Grille	Centrally located drainage grid screen in pre-shrunk PVC fabric joined by high frequency weld
Packaging	Supplied in a cardboard box with an instruction handbook.

POOL COVER ACCESSORIES

S.S. Spike - 03994



S.S. Spike for lawn - 05732



Retractable spike - 40950



Concealable anchoring, with spring - 03995



Dynamometric spring - 03996



Accessories

		Code	Standard Pack	Standard Weight in kg	Standard Volume in m^3
S.S. Spike	Per unit	**03994**	-	-	-
S.S. Spike for lawn	Per unit	**05732**	-	-	-
Retractable cylindrical spike	Per unit	**40950**	-	-	-
Retractable anchoring, with spring	Per unit	**03995**	-	-	-
Dynamometric spring	Per unit	**03996**	-	-	-
1.50 m black strap for roller	Per unit	**25980**	-	-	-
8 mm rubber tensor	m^2	**03998**	-	-	-
8 mm x 60 cm Cabiclic rubber tensor	Per unit	**03999**	-	-	-
Ø 10 x 80 mm rust-proof sheath	Per unit	**05736**	-	-	-
Complete 2 piece hole cover	Per unit	**05734**	-	-	-
Fixkit clip with rubber tensor	Per unit	**09439**	-	-	-

Roller 1.50 m black strap - 25980



8 mm rubber tensor - 03998



60 cm Cabiclic rubber tensor - 03999



25 cm Cabiclic rubber tensor - 05736



Rubber tensor with hooks - 05734



Fixkit clip with rubber tensor - 09439



REINFORCED PVC PROTECTION COVERS

Safety cover to prevent children under 5 from getting into the pool. Compliant with standard NFP 90-308. For in-ground pool max. 11 x 5 metres (+ ladder). Allow at least 30 cm on each side of the pool (e.g., pool of 10 x 5 metres, cover of 10.60 x 5.60 m). Can be used all year round as it protects the pool from dirt in summer and winter and diminishes the proliferation of bacteria and algae.

Tramuntana cover

- **Composition:** 580 g/m^2 PVC cloth reinforced with aluminium rods approx. every 1.50 m.
- **Joint**: High frequency weld.
- **Edges:** 6 cm double-edge welded along the whole length with anti-lift tapes inside.
- **Reinforcements:** Anti-abrasion PVC slides in each rod at the level of the coping.
- **Fastenings:** Tapes and stainless steel hooks. Cylindrical stainless steel/aluminium stakes.
- **Drainage:** Holes for draining rainwater across the whole width of each rod.
- **Rolling:** 1 or 2 cranks, depending on cover size.
- **Packaging:** Cardboard and instruction handbook.



Colour	Code	Standard Pack	Standard Weight in kg	Standard Volume in m^3
Blue/Beige	**40939**	-	-	-
Green/Beige	**40940**	-	-	-
Almond/Beige	**40941**	-	-	-
Beige/Beige	**40942**	-	-	-
Medium grey / beige	**099025**	-	-	-

+ info PDB Product Database
Further information on **PRODUCTS**
www.astralpool.com

REINFORCED PVC PROTECTION COVERS



Reduction gear crank system

A handle is used for pools smaller than 9 m and two handles for pools bigger than 9 m. The handle fits into one of the rods and will allow the cover to be rolled.

	Code	Standard Pack	Standard Weight in kg	Standard Volume in m^3
Demultiplication handle	**41223**	**-**	-	-

Steps for Tramuntana cover

	Code	Standard Pack	Standard Weight in kg	Standard Volume in m^3
Fixed price straight steps	**40947**	**-**	-	-
Trim for steps	**40948**	-	-	-
Profile for wide steps	**42411**	-	-	-

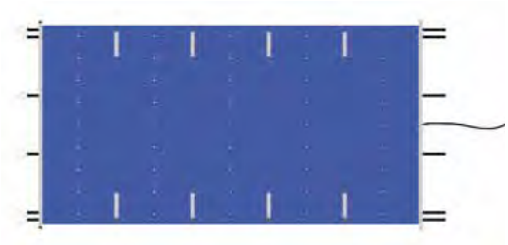



STORAGE ROLLERS FOR COVERS

Central pipe in anodized aluminium



Covers max. length: 15 m

Other lengths, available on request

	Code	Standard Pack	Standard Weight in kg	Standard Volume in m³
Ø 100 mm				
Fixed pipe, length 4.5 m	**07622**	1	12.0	0.059
Fixed pipe, length 5.5 m	**07623**	1	14.3	0.071
Fixed pipe, length 6.6 m (2 rubber bands included)	**07624**	1	17.4	0.084
Telescopic pipe, length 4 - 5.5 m	**07625**	1	12.8	0.054
Telescopic pipe, length 5 - 6.6 m	**07626**	1	15.5	0.067
Ø 80 mm				
Telescopic pipe, length 4 - 5.5 m	**24762**	1	10.3	0.035
Telescopic pipe, length 5 - 6.6 m	**30806**	1	12.3	0.043

Fixed pipe

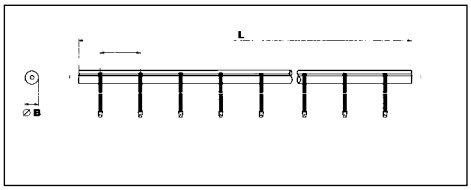

Pipe code	L (m)	Ø B (mm)	Nº straps
07622	4.5	100	8
07623	5.5	100	8
07624	6.6	100	10

Telescopic pipe

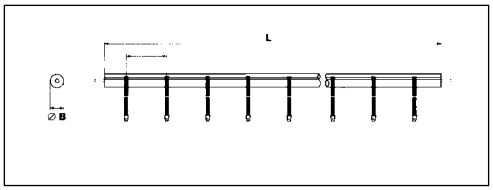

Pipe code	L (m)	Ø B (mm)	Nº straps
07625	4.0 - 5.5	95/100	8
07626	5.0 - 6.6	95/100	8
24762	4.0 - 5.5	75/80	8
30806	5.0 - 6.6	75/80	8

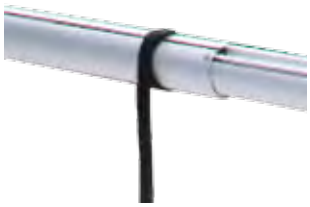

Covers max. length: 15 m

Stainless Steel mobile support

A set of 2 supports, one "T" end fixed support and the other end support with wheels. Includes 8 straps to tie the cover.

	Code	Standard Pack	Standard Weight in kg	Standard Volume in m³
Supports in AISI-304	**07628**	1	7.2	0.035



Covers max. length: 15 m

Tube shown in the photo not included in supply

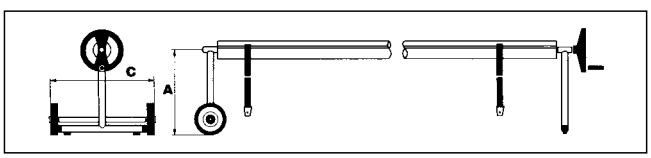

Code	A (mm)	C (mm)
07628	500	650

+ info PDB Product Database
Further information on **PRODUCTS**
www.astralpool.com

STORAGE ROLLERS FOR COVERS



Stainless Steel fixed end brackets

Set of 2 brackets in "T" shape in AISI-304. Includes steering wheel operation with 8 straps for fixing the cover.

	Code	Standard Pack	Standard Weight in kg	Standard Volume in m^3
A set of 2 "T" brackets	**07631**	1	4.8	0.035

Tube shown in the photo not included in supply

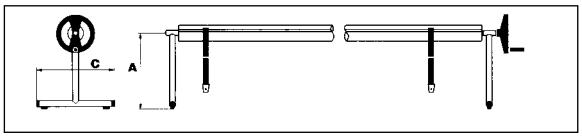

Pipe code	A (mm)	C (mm)
07631	500	514



Fixed support for roller

Two flange fixing supports with adjustable height from 500-800 mm in AISI-304. Fixed to the floor with flanges. Includes 8 straps for fixing the cover.

	Code	Standard Pack	Standard Weight in kg	Standard Volume in m^3
Supports in AISI-304	**07629**	1	7.2	0.029

Tube shown in the photo not included in supply

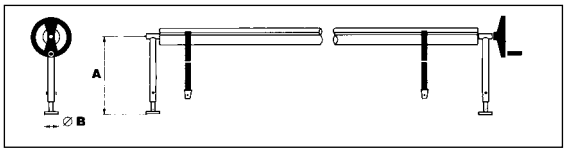

Code	A (mm)	B (mm)
07629	500 to 800	100



Wall support for roller

Pair of wall fixing supports. In S.S. AISI-304. Includes 8 straps for fixing the cover.

	Code	Standard Pack	Standard Weight in kg	Standard Volume in m^3
Supports in AISI-304	**07630**	1	6.6	0.087

Tube shown in the photo not included in supply

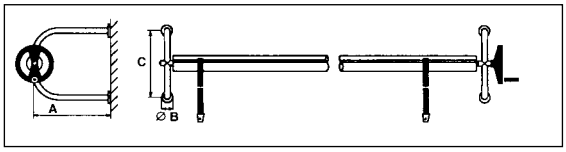

Code	A (mm)	B (mm)	C (mm)
07630	500	100	500

STORAGE ROLLERS FOR COVERS



Roller supports for larger pools

Suitable for fixed roller pipes 07622, 07623 and 07624 or telescopic pipes 07625 and 07626, with 1, 2 or 3 rollers and steering wheels and rotating bar wheel for handling covers. Contains of 2 Stainless Steel AISI-304 structures with wheels (1 set with brakes) to move the roller. Includes 8 straps per roller.

	Code	Standard Pack	Standard Weight in kg	Standard Volume in m^3
2 mobile supports with 1 roller pipe	**15836**	1	36.4	0.937
2 mobile supports with 2 roller pipes	**15835**	1	27.4	1.46
2 mobile supports with 3 roller pipes	**15834**	1	28.4	1.46

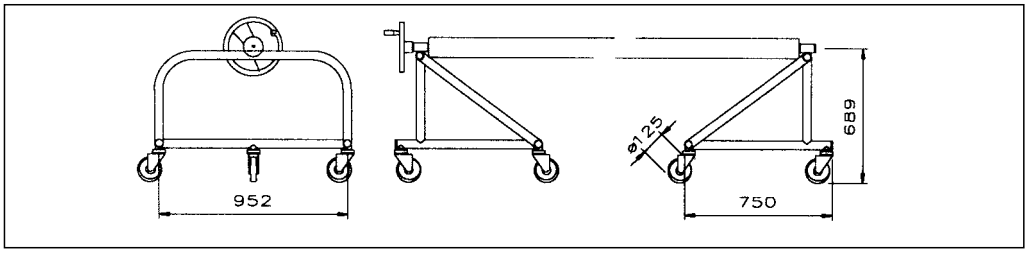

Mobile supports with 1 pipe. - Dimensions in mm.

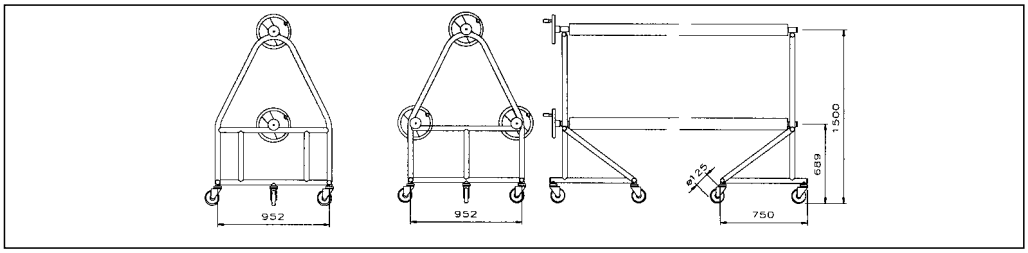

Mobile supports with 2 and 3 roller pipes. - Dimensions in mm.

AUTOMATIC COVERS

The AstralPool automatic cover

AstralPool is continually incorporating the latest innovations to its products in matters of safety. As such the automatic pool covers have been developed to meet the demands of the French standard NF P90 308, which guarantees maximum user safety.

The AstralPool automatic covers cover the whole pool and are easily rolled up or spread thanks to their built-in motorized roller. The turning of a key is all that is needed to get it working.

Manufactured in rigid slats available in various colours, the design and composition produce a floating cover that fits over the entire pool and makes for very effective heat insulation. We have seven models to cover the equipment needs of new and existing pools: the submerged Roussillon models, the above-ground Carlit models and the above-ground model with a bench, Capcir.

Roussillon submerged automatic models allow for seamless integration with the pool. The roller mechanism is located in a separate sunken compartment sectioned off from the pool by a brick or PVC panel.

The above-ground models (Carlit) are ideal for already existing pools as the winding shaft is fastened in place to the pool decking.

The above-ground models with protective casing (Narbonne) are the basic above-ground models which can be complemented with a bench that covers the mechanical installation, giving it a high-quality finish. For installation in existing swimming pools.

Main advantages

- Increased safety in the swimming pool to protect people and pets from falling accidentally into it. The floating slats cover the entire water surface.*
- Very convenient to use, the swimming pool is covered and uncovered in silence by simply turning a key.
- Represents considerable savings:
    - It acts as a thermal barrier preventing heat losses and extending the pool use season.
    - It is a basic complement for pool heating.
    - It prevents evaporation, therefore it saves water.
    - It reduces algae formation, which results in an important saving in chemical products.
- In indoor pools no condensation is produced in the enclosed hall, thus avoiding deterioration of building materials.
- Lower maintenance costs: reduction of suspended particles.
- The automatic cover enables greater customisation of the swimming pool, increasing its value.

AstralPool service

- The wide AstralPool commercial network offers immediate service.
- We offer our clients pre- and post-sales technical assessment.
- The manufacturing technical sheet will be used to make a cover which is perfectly adapted to your needs.
- All AstralPool covers undergo strict quality control based on the most demanding regulations.
- Assembly and Civil Engineering Manuals are available to allow building the swimming pool with the ideal requirements for subsequent installation of the submerged cover.

(*) Our automatic covers comply with the requirements of the French standard NF P90-308 which demands the use of standardized safety mechanisms to prevent the risk of drowning by accidental falls into the pool.

AUTOMATIC COVERS

Advice for use and winterizing

We recommend to follow these basic indications to obtain the optimum performance from the automatic cover:

- Before operating the cover you must ensure that nobody is in the swimming pool and that there are no objects that could become obstacles to its normal operation.
- Maintaining the correct water level is also important, as a level which is too high or too low can cause blockages at the tie beam, partition or the steps.
- During the retrieving and expanding operations the cover should not be blocked, as this action could be dangerous as well as harmful to the operating mechanism.
- If an automatic pool floor cleaner is used make sure that when the cover is extended neither the hose nor the power supply cable is caught up.
- Regular cleaning of the cover with a pressure cleaning device or with a PVC descaling liquid is recommended. This will also prevent leaves from settling on the cover which could otherwise stain the slats.
- In the case of a hail storm we recommend that you retrieve the cover.
- In the Roussillon submerged model we recommend that you always keep the motor housing dry to prevent the geared motor from getting wet.

For good winterization, and in order to find the pool in the best conditions in the spring, we recommend to follow the following indications:

- Leave the cover extended over the water surface.
- Keep the water level constant. An excess should be drained through the main drain or the skimmer box.
- It is advisable to clean the trapdoor and the motor housing with a high pressure cleaner before the pool is winterized.
- Place a number of anti-freeze floats in the trapdoor casing, behind the cover. The skimmers should also be protected in the same way.
- We recommend the installation of a plastic type cover to prevent leaves and other substances from obstructing the trapdoor, which should be cleaned regularly.
- In the case of freezing, avoid forcing or pressing down hard on the slats as they could be damaged.
- If the motor is in risk of flooding it is advisable to cut off the power supply and remove the motor.

Automatic cover price calculation

How to calculate the price of an above-ground cover

The basic elements to calculate the above-ground cover are:

1. Mechanical kit
2. Slats
3. Ladder
4. Safety system
5. Postage and packaging

How to calculate the price of a submerged cover

The basic elements to calculate the submerged cover are:

1. Mechanical kit
2. Embedding kit
3. Tie beam and brackets
4. Kink-proof bracket (when necessary)
5. Partition and brackets
6. Slats
7. Ladder
8. Safety system
9. Postage and packaging

AUTOMATIC COVERS: ABOVE-GROUND MODELS

Zen'It bench



The new AstralPool ZEN'IT bench fits any above-ground automatic covers.
Original 3 in 1: to cover the roller and the stander, to store equipment, to add value to the pool. Bench manufactured with quality materials in powder-coated aluminium, Stainless steel and exotic wood.

Easy-to-mount, in kit. No handling equipment necessary.

Length of 1 module: 1,2 m

Max. Length of the cover: 9 m with special roller stander.

Sold with or without above-ground roller – contact us for more info.

- **Trendy design**
- **Supplied in kits, easy-to-mount**
- **Multi-purpose**



Access to the skimmers and mechanical parts

Different finishes available

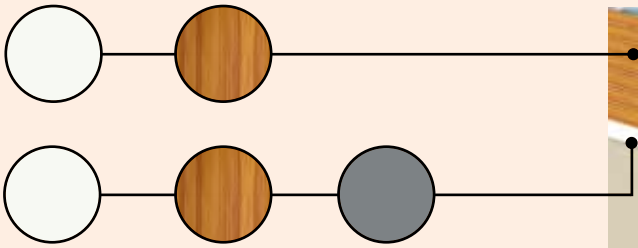



With storage area

Overall dimensions

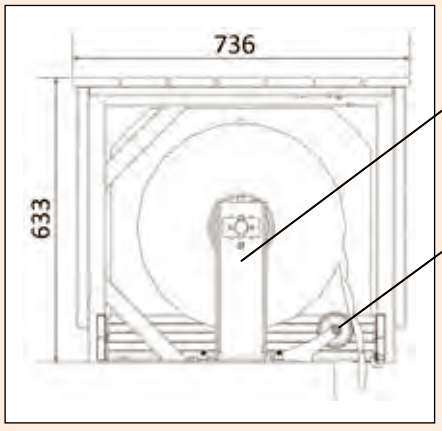

Space saving stander, reducing the footprint of the roller

Guiding system: reduced footprint over the pool



Complete bench shipped on a Euro pallet

Mounting time: 30 min/module
No need for handling equipment

Number of modules	3	4	5	6
Total bench length	3.56 m	4.77 m	5.97 m	7.17 m
Max pool width	3.01 m	4.22 m	5.42 m	6 m

AUTOMATIC COVERS: ABOVE-GROUND MODELS





N-Carlit above-ground model

Automatic above-ground cover perfect for existing pools with limit switch up to:
- 3 x 18 m + stairs
- 4 x 17 m + stairs
- 5 x 17 m + stairs
- 6 x 16 m + stairs
- up to 7 x 14 m plus ladder

Note that as it is an above-ground model cover, the storage rollers must be placed out of the pool, fixed to the floor.

MECHANICAL KIT:

Consists of:
- Two white or sand stainless steel stands.
- Ø 146 mm anodized aluminium roller shaft.
- 24V tubular motor with limit switch adjustment.
- Key switch with self-return to 0 point.
- Switchboard with 220/24V transformer.



	Width	3,03 m			4,03 m			5,03 m		
	LENGTH	Axis	Ref.	Code	Axis	Ref.	Code	Axis	Ref.	Code
White / Black	length <= 8 m	alu ø146	061357	**54136**	alu ø146	061357	**54136**	alu ø146	070207	**070207**
	8 m < length <= 10 m		061357	**54136**		061357	**54136**		061359	**54138**
	10 m < length <= 11 m		061357	**54136**		070206	**070206**		061359	**54138**
	11 m <long <= 12 m		061357	**54136**		070206	**070206**		061359	**54138**
	12 m < length <= 13 m	alu ø196	061358	**54137**	alu ø196	061358	**54137**	alu ø196	061360	**54139**
	13 m < length <= 15 m		061358	**54137**		061358	**54137**		061363	**54142**
	15 m < length <= 17 m		061358	**54137**		061362	**54141**		061363	**54142**
White - White	length <= 8 m	alu ø146	061367	**54146**	alu ø146	061367	**54146**	alu ø146	070209	**070209**
	8 m < length <= 10 m		061367	**54146**		061367	**54146**		061369	**54148**
	10 m < length <= 11 m		061367	**54146**		070208	**070208**		061369	**54148**
	11 m < length <= 12 m		061367	**54146**		070208	**070208**		061369	**54148**
	12 m < length <= 13 m	alu ø196	061368	**54147**	alu ø196	061368	**54147**	alu ø196	061370	**54149**
	13 m < length <= 15 m		061368	**54147**		061368	**54147**		061373	**54152**
	15 m < length <= 17 m		061368	**54147**		061372	**54151**		061373	**54152**
White - Sand	length <= 8 m	alu ø146	061426	**66090**	alu ø146	061426	**66090**	alu ø146	070227	**66096**
	8 m < length <= 10 m		061426	**66090**		061426	**66090**		061429	**061429**
	10 m < length <= 11 m		061426	**66090**		070226	**070226**		061429	**061429**
	11 m < length <= 12 m		061426	**66090**		070226	**070226**		061429	**061429**
	12 m < length <= 13 m	alu ø196	061427	**66091**	alu ø196	061427	**66091**	alu ø196	061430	**66094**
	13 m < length <= 15 m		061427	**66091**		061427	**66091**		061431	**66095**
	15 m < length <= 17 m		061427	**66091**		061428	**66092**		061431	**66095**
	Width	6,03 m			7,03 m			7,50 m		
	LENGTH	Axis	Ref.	Code	Axis	Ref.	Code	Axis	Ref.	Code
White - Black	length <= 14 m	alu ø196	061361	**54140**	alu ø196	061366	**54145**	alu ø196	070300	**66287**
	14 m < length <= 16 m		061361	**54140**		070302	**66100**		070301	**66288**
	16 m < length <= 17 m		070303	**66097**		070302	**66100**		070301	**66288**
White - White	length <= 14 m		061371	**54150**		061376	**54155**		070296	**66289**
	14 m < length <= 16 m		061371	**54150**		070298	**66285**		070297	**66290**
	16 m < length <= 17 m		070299	**66098**		070298	**66285**		070297	**66290**
White - Sand	length <= 14 m		061432	**66293**		061433	**66294**		070308	**66291**
	14 m < length <= 16 m		061432	**66293**		070310	**66286**		070309	**66292**
	16 m < length <= 17 m		070311	**66099**		070310	**66286**		070309	**66292**

AUTOMATIC COVERS: ABOVE-GROUND MODELS





Carlit Solar Pool cover

The automatic solar pool cover Carlit runs on solar energy, making it a very environmentally-friendly product. It reduces water evaporation and heat loss in your pool. The cover also minimizes premature evaporation of pool chemicals. Certified by the French standard NF 90-308, the Carlit solar pool cover guarantees higher quality, reducing possible accidents arising from children, animals, or objects falling into the water.

Main advantages:

- Simplified installation, no wiring required (power supply via solar energy).
- 40-cycle independence: once the battery is fully charged, in the absence of further light the cover can be extended and 40-cycle autonomy: once the battery is charged and in absence of light, you can open and close the cover 40 times.
- Easy to use cover with low maintenance costs.

General features:

- Covers pools up to 6 x 12m with a ladder.
- Solar-powered roller. One bracket fitted with a photovoltaic cell.
- Tubular 60 Nm or 120 Nm 24 V depending of the dimensions of the pool geared motor. Anodized aluminium pipe.
- Mechanical limit switch.
- Four different colours for slats and caps: white, sand, grey and medium grey.
- Two 12 volt batteries.

Mechanical kit	Code
Mechanical kit up to 4 m (up to 4 x 12 m)	**35917**
Mechanical kit up to 5 m (up to 5 x 12 m)	**35918**
Mechanical kit up to 6 m (up to6 x 12 m)	**35919**

AUTOMATIC COVERS: ABOVE-GROUND MODELS



Borna municipal model

It is intended to be installed in municipal indoor or outdoor pools of 12.5 x 25 meters maximum. It can be used for bubble or reinforced polyethylene foam covers. The distance between the roller shaft and the pool edges must be reduced as much as possible to prevent abnormal wear and tear due to the friction on the coping.

Technical features:

- 250 Nm 24V motor.
- 300 mm stainless steel shaft.
- Thermoplastic bushing with stainless steel bearing.
- Stand with a protective layer in thermoformed ABS.
- Remote control + Key.

	Code	Standard Pack	Standard Weight in kg	Standard Volume in m^3
Mechanical kit up to 12.5 m (max. 12.5 x 25 m)	**38734**	-	-	-



Double municipal model

Makes it possible to cover municipal pools up to 15 x 25 m with bubble or polyethylene foam covers. 6.03 x 25 m.

Technical features:

- 2 x 120 Nm 24V tubular motors.
- 2 aluminium shafts.
- 6 wheels.
- Remote control + Key

	Code	Standard Pack	Standard Weight in kg	Standard Volume in m^3
Width ≤6.03m Length ≤ 25m	**41441**	-	-	-
Width ≤8.03m Length ≤ 25m	**41442**	-	-	-

AUTOMATIC COVERS: SUBMERGED MODELS



Roussillon submerged model: dry well motor

The Roussillon automatic cover is the submerged model which incorporates the motor in a separate sunken compartment and both the winding shaft as well as the cover are housed inside the pool at one end. The Roussillon model can cover an indoor pool up to 11 x 20 m².

The submerged pit containing the roller shaft from the main pool should be separated from the main pool by a small concrete partition at the time of construction or with a PVC partition later on.
The basic elements for assembling the cover are the slats, the step slats, the mechanical kit, the embedding kit, the aluminium tie beam and the pit cover.



24 V geared motor



220/24 V switchboard

Solution valid for a mechanical installation up to a maximum depth of 55 cm of the water level. For greater depths, please enquire.

MECHANICAL KIT

Includes the following elements:

- Extruded aluminium or stainless steel shaft.
- Motor stand.
- Watertight gaskets on bushing side.
- Watertight gaskets on bearing stand side.
- 24V reducer motor with stainless steel stand.
- 220/24V standard switchboard.
- On-off key switch with key. Should be installed in full view of the pool. Works by continuous turning of the key.

Embedding kit for a standard installation 55 cm above the water level.
Should the shaft have to be installed at a greater height, please consult us.



Extruded aluminium shaft



On-off key switch

ROUSSILLON DRY WELL (EMBEDDING KIT 210 mm DRIVE SHAFT 500 mm)

Width	3.03 m			4.03 m			5.03 m			6.03 m		
LENGTH	Axis	Ref.	Code	Axis	Ref.	Code	Axis	Ref.	Code	Axis	Ref.	Code
4 m - 12 m	ø146	060465	**31144**	ø146	060465	**31144**	ø146	060467	**31145**	ø196	060468	**31146**
13 m - 15 m							ø196	060468	**31146**			
16 m - 19 m				ø196	061011	**43221**						
20 m										ø196	070442	070442
Width	**7,03 m**			**8,03 m**			**9.03 m - 11.03 m**					
LENGTH	**Axis**	**Ref.**	**Code**	**Axis**	**Ref.**	**Code**	**Axis**	**Ref.**	**Code**			
4 m - 10 m	ø196	060466	**31904**	ø196	060470	**31909**	ø300	070440	070440			
11 m - 13 m				ø196	070444	070444						
14 m - 15 m							ø300	060570	**34767**			
16 m - 17 m	ø196	070443	070443	ø300	070441	070441						
18 m - 20 m	ø300	070441	070441									

ROUSSILLON DRY WELL (EMBEDDING KIT 310mm DRIVE SHAFT 600 mm)

Width	3.03 m			4.03 m			5.03 m			6.03 m		
LENGTH	Axis	Ref.	Code	Axis	Ref.	Code	Axis	Ref.	Code	Axis	Ref.	Code
4 m - 12 m	ø146	060351	**31144-001**	ø146	060351	**31144-001**	ø146	060352	**31145-001**	ø196	060353	**31146-001**
13 m - 15 m							ø196	060353	**31146-001**			
16 m - 19 m				ø196	060363	**31144-004**						
20 m										ø196	070445	070445
Width	**7,03 m**			**8,03 m**			**9.03 m - 11.03 m**					
LENGTH	**Axis**	**Ref.**	**Code**	**Axis**	**Ref.**	**Code**	**Axis**	**Ref.**	**Code**			
4 m - 10 m	ø196	060354	**31904-001**	ø196	060355	**31909-001**	ø300	060848	060848			
11 m - 13 m				ø196	070447	070447						
14 m - 15 m							ø300	060381	**31904-007**			
16 m - 17 m	ø196	070446	070446	ø300	060847	060847						
18 m - 20 m	ø300	060847	060847									

NON-WATERTIGHT MOTOR. Optional installation of a watertight motor.
WATERTIGHT MOTOR AND DISENGAGEABLE DRIVE.

AUTOMATIC COVERS: SUBMERGED MODELS

Roussillon submerged model: dry well motor



310 mm wall conduit



Bearing bracket for recessed assemblies



Part to be recessed for tie beam support bracket

EMBEDDING KIT

Includes the following elements:

- Bushing.
- Bearing support bracket for embedding.
- Parts to be recessed (2) for tie beam support bracket
- Watertight gaskets for bushing.

EMBEDDING KIT	Code
With 110 mm wall conduit	**33075**
With 210 mm wall conduit	**31143**
With 310 mm wall conduit	**33074**

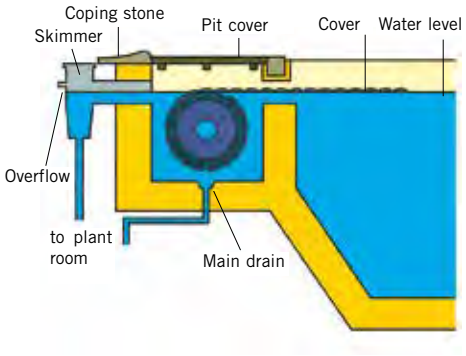

ROUSSILLON MODEL ASSEMBLY DRAWING

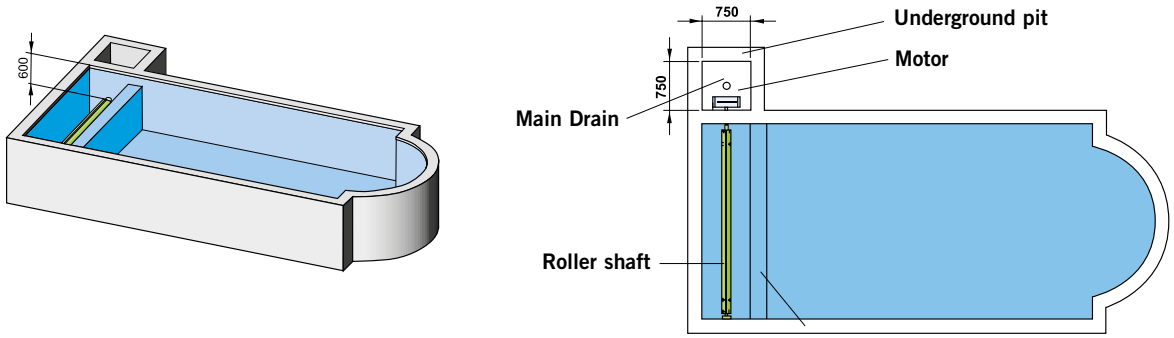

Watertight bushing

+ info

For further information see the AstralPool product database in the PRODUCTS section at www.astralpool.com.

AUTOMATIC COVERS: SUBMERGED MODELS

Roussillon submerged model



KINK-PROOF SUPPORT FOR EMBEDDED BEAM

KINK-PROOF SUPPORT TO BE MOUNTED ON WALL	
DIMENSION of pit cover in mm	**Code**
615 ≤ Dim. ≤ 1015	**61678**
1016 ≤ Dim. ≤ 1460	**61682**

Supports must be used if the inner width of the pool shell is > 4 m.
The number of supports to be used is set out in the table below.

PRACTICAL INFORMATION		
Pool shell width	**Number of beams required**	**Number of kink-proof supports required**
Width ≤ 4 m	1 beam	0
4 m ≤ Width ≤ 6.03 m	1 beam	1
6.03 m ≤ Width ≤ 8.03 m	1 beam	2
8.03 m ≤ Width ≤ 9.03 m	1 beam of 4 m + 1 beam of 5 m	3
9.03 m ≤ Width ≤ 10.03 m	2 beams of 5 m	3
10.03 m ≤ Width ≤ 11.03 m	2 beams of 6 m	4

SAFETY SYSTEMS

Place the safety system on the shaft side and the step side IF THE DEPTH between the water level and pit cover is > 20 cm.

The pool may have beams on the corners of a maximum of 4 cm, in compliance with standard NF 90-308.

In the case of larger beams, the beam of the wall side must be brought forward by the same distance.

The clearance between the wall and the beam must be greater than 7 cm, otherwise it will not comply with standard NF 90-308.

Diagram of the pit

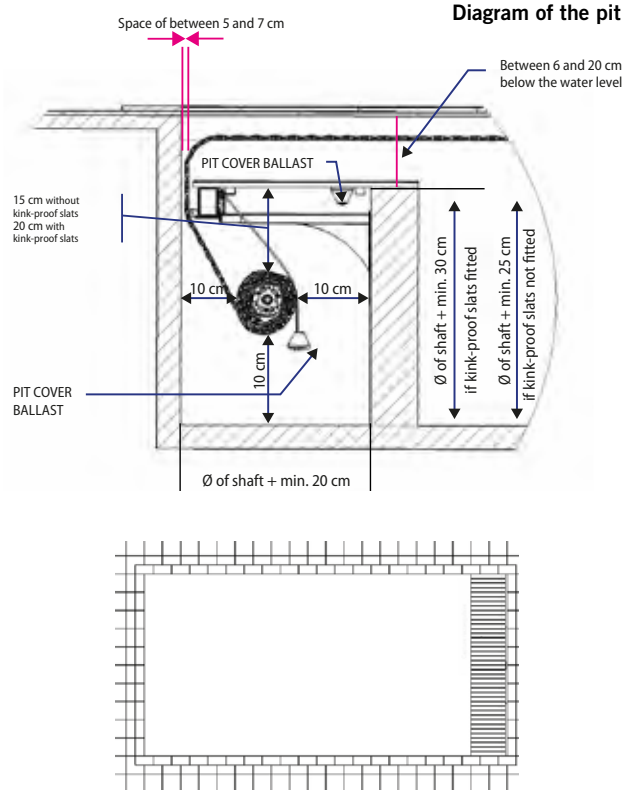

Dimensions to be taken into account

A space measuring the height of at least the diameter of the cover when rolled plus 30 cm must be left free.

The inner width of the pit must be wider than the diameter of the shaft plus 20 cm (see diagram).

The clearance for the cover between the wall and the back of the pit cover must be between 5 and 7 cm, in compliance with standard NF 90-308.

The depth of the pit cover is up to the user. It should be at least 6 cm so that the cover works properly, and a maximum of 20 cm, in compliance with standard NF 90-308.

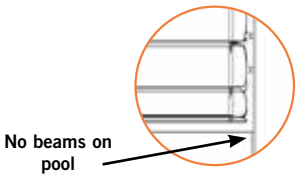

AUTOMATIC COVERS: SUBMERGED MODELS



Roussillon submerged model: motor in the shaft

The motor is integrated inside the winding shaft and can be installed in already-built pools up to 8 metres wide.

It can cover an indoor pool up to 8 x 12 m.

As in the Roussillon model the submerged part containing the roller shaft should be separated by a small concrete partition at the time of construction or later with a PVC partition. The slat colours available for both models are white, beige and opaque blue.

The Conflent mechanism may be fitted:
- Below the coping stone.
- Against the wall.



Mechanical system

Max. pool dimensions	Motor	Code
Pool 4 x 12 m	(shaft with limit switch)	**33070**
Pool 5 x 12 m	(shaft with limit switch)	**33072**
Pool 6 x 12 m	(shaft with limit switch)	**33073**
Pool 7 x 14 m	(shaft with limit switch)	**33906**

Solution valid for a mechanical installation up to a maximum depth of 55 cm of the water level. For greater depths, please enquire.



Roussillon submerged model: motor at water level

This submerged automatic cover is specially designed for new-build or existing pools up to 6 metres wide. The IP68 motor (watertight) is situated above the water level and below the lid => easy motor access => better maintenance.

The submerged zone containing the roller shaft can be separated by a small concrete partition at the time of construction or with a PVC partition later on.

It has the same technical features as the dry well Roussillon motor: Easy to install in existing and new-build pools. Seamless integration with pool surround. Easy maintenance as the motor is situated at the water level.

The mechanics are made up of:
- 150 Nm motor equipped with a limit switch system.
- 2 stainless steel brackets: bearing part and motor part with only the gear transmission.
- A 220 V/24 V power supply unit with a remote key switch.

Width	3.07 m			4.07 m		
LENGTH	**Axis**	**Ref.**	**Code**	**Axis**	**Ref.**	**Code**
long < 15 m	alu ø146	060335	**33759**	alu ø146	060335	**33759**
15 m < long < = 18 m	alu ø146	060335	**33759**	-	-	**-**
Width	**5.07 m**			**6.07 m**		
LENGTH	**Axis**	**Ref.**	**Code**	**Axis**	**Ref.**	**Code**
length < 12 m	alu ø146	060337	**33760**	alu ø196	060339	**33761**
12 m < long < = 14 m	alu ø196	060339	**33761**	-	-	**-**

WATER LEVEL NEEDED: 120 mm from the pool border.



Stainless Steel bracket

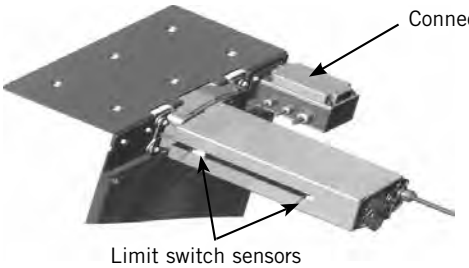

AUTOMATIC COVERS: SUBMERGED MODELS







Roussillon submerged deck model

Embedded pit covers : 2 SOLUTIONS

Solution 1: WOODEN PIT COVERS

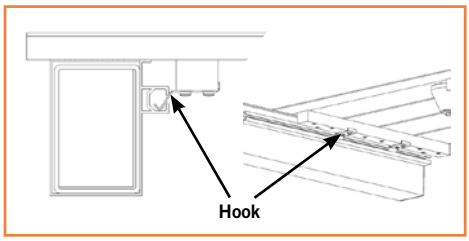



- Specific to this solution as they are ballasted not to float.
- A hook should be fastened to each slat. The hooks should be inserted into the groove on the beam so that they do not move out of place.
- Wooden pit covers are delivered in 500 cm wide sheets.

Size	Code
700 mm x 1000 mm	**61826**
950 mm x 1000 mm	**61801**
Made to measure	**61816**

Solution 2: STAINLESS STEEL PIT COVERS / BEAMS

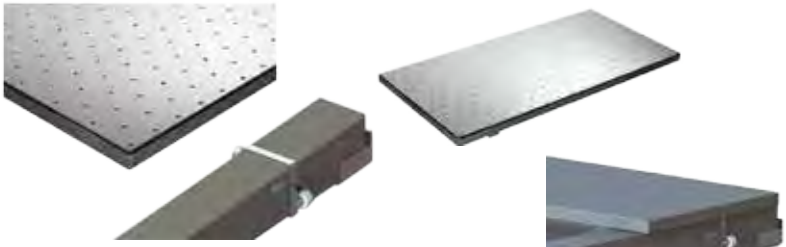

EMBEDDED BEAM + KINK-PROOF SUPPORTS

Embedded beam + 2 beam support housings.

- Available in white only.
- 80 x 120 mm cross-section.
- In aluminium with PVC sleeve.
- Weight of 5.4 kg/ml.





Max. inner shell width	Code
Width ≤ 4,03 m	**61806**
4 m ≤ Width ≤ 5,03 m	**61807**
5m ≤ Width ≤ 6,03 m	**61808**
6 m ≤ Width ≤ 7,03 m	**61809**
7 m ≤ Width ≤ 8,03 m	**61810**
Optional	
2 embedment plates for assembly to beam support housings	**70264**



70264

Solution 3: COMPARTMENT COVER IN PVC

For more information see the AstralPool product database in the PRODUCTS section at www.astralpool.com.

AUTOMATIC COVERS: DISPLAY MODELS

Carlit Solar display model (without motor)

Width: 1.5 metres with blue, white and sand colour slats.



Code	Standard Pack	Standard Weight in kg	Standard Volume in m^3
38740	1	-	-

N-Carlit display model (without motor)

Width: 1.5 metres with blue, white and sand colour slats.

Code	Standard Pack	Standard Weight in kg	Standard Volume in m^3
061624	1	-	-

AUTOMATIC COVERS: SUBMERGED MODELS

Submerged models: Accessories

THE TIE BEAM

Its function is to provide support to the pit cover. Manufactured in white coated aluminium, it measures 100 x 110 mm and weighs 9 kg/ml.

This tie beam is delivered with coated stainless steel support bracket and stainless steel nuts and bolt.



Beam standard bracket



Beam adjustable bracket



Vertical tie-beam bracket for liner



Wall tie-beam bracket

Beam length	Tie beam code 100 x 110	Tie beam code 100 x 70
White beam + Standard bracket		
UP TO 4 meters	**31148**	-
From 4 m to 5 m	**31149**	-
From 5 m to 6 m	**31150**	-
From 6 m to 7 m	**31911**	-
From 7 m to 8 m	**31912**	-
Sand beam + Standard bracket		
UP TO 4 meters	**38529**	-
From 4 m to 5 m	**38530**	-
From 5 m to 6 m	**38531**	-
From 6 m to 7 m	**38532**	-
From 7 m to 8 m	**38533**	-
White beam + Stand for liner holding vertical profiler		
UP TO 4 meters	**33870**	-
From 4 m to 5 m	**33871**	-
From 5 m to 6 m	**33872**	-
From 6 m to 7 m	**33873**	-
From 7 m to 8 m	**33886**	-
Sand beam + Stand for liner holding vertical profile		
UP TO 4 meters	**38534**	-
From 4 m to 5 m	**38535**	-
From 5 m to 6 m	**38536**	-
From 6 m to 7 m	**38537**	-
From 7 m to 8 m	**38538**	-
White beam + Support bracket for fastening to the pool wall		
UP TO 4 meters	**33874**	**56063**
From 4 m to 5 m	**33875**	**56064**
From 5 m to 6 m	**33876**	-
Sand tie beam + Bracket to fasten to pool wall		
UP TO 4 meters	**38544**	**56065**
From 4 m to 5 m	**38545**	**56066**
From 5 m to 6 m	**38546**	-
White beam + Adjustable bracket		
UP TO 4 meters	**35717**	**56057**
From 4 m to 5 m	**35718**	**56058**
From 5 m to 6 m	**35719**	-
From 6 m to 7 m	**35720**	-
From 7 m to 8 m	**35721**	-
Sand beam + Adjustable bracket		
UP TO 4 meters	**38539**	**56059**
From 4 m to 5 m	**38540**	**56060**
From 5 m to 6 m	**38541**	-
From 6 m to 7 m	**38542**	-
From 7 m to 8 m	**38543**	-

AUTOMATIC COVERS: SUBMERGED MODELS

Submerged models: Accessories



KINK-PROOF SUPPORT FOR EMBEDDED BEAM

DIMENSION of pit cover in mm	Code
615 ≤ Dim. ≤ 1015	**61678**
1016 ≤ Dim. ≤ 1460	**61682**

Supports must be used if the inner width of the pool shell is > 4 m.

Kink-proof bracket needed for tie beams over 5.5 m. Two kink-proof brackets needed for tie beams between 5.5 m and 7 m. For more information on kink-proof brackets, please enquire.

NO. OF BRACKETS FOR A 100 X 70 TIE BEAM		
Pool shell width	**No. of tie beams needed**	**No. of kink-proof brackets needed**
long. ≤ 3.03 m	1 tie beam	0
3.03 < long. ≤ 5.03 m		1
5.03 < long. ≤ 8.03 m	2 x 4m tie beams	3
8.03 < long. ≤ 9.03 m	1 x 4m tie beam + 1 x 5m tie beam	
9.03 < long. ≤ 10.03 m	2 x 5m tie beams	
10.03 < long. ≤ 11.03 m	3 x 4m tie beams	5

NO. OF BRACKETS FOR A 100 X 110 TIE BEAM		
Pool shell width	**No. of tie beams needed**	**No. of kink-proof brackets needed**
long. ≤ 5.5 m	1 tie beam	0
5.5 < long. ≤ 7.03 m		1
7.03 < long. ≤ 8.03 m		2
8.03 < long. ≤ 9.03 m	1 x 4m tie beam + 1 x 5m tie beam	3
9.03 < long. ≤ 10.03 m	2 x 5m tie beams	
10.03 < long. ≤ 11.03 m	1 x 5m tie beam + 1 x 6m tie beam	

AUTOMATIC COVERS: SUBMERGED MODELS

Submerged models: Accessories



Tropical wood box cover

White aluminium compartment cover

Brackets for fastening to wall

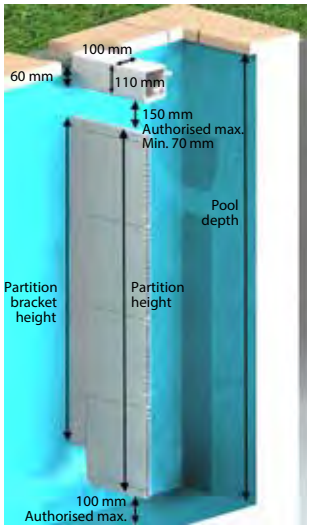

Brackets for fastening to beam brackets

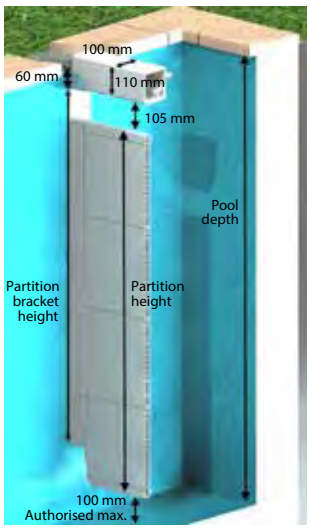

THE PIT COVER

The pit cover protects the automatic cover operating unit and conveys an aesthetic improvement to the surroundings. It is available in wood, or in white aluminium.

For pools with a partition wall the cover will be 950 mm wide, while for pools with a PVC partition the 700 mm lid will be used.

Thickness of the wooden pit cover: 25 mm.
Thickness of the aluminium pit cover: 28 mm.

In-ground box cover	Code
Made of tropical wood (1.00 x 0.70 m)	**31152**
Made of tropical wood (1.00 x 0.95 m)	**31153**
Tropical wood made to order (m^2)	**31154**
White aluminium 1.00 x 0.70 m	**33679**
White aluminium 1.00 x 0.95 m	**33680**
White aluminium made to measure, m^2	**33681**
Sand aluminium 1.00 x 0.70 m	**38512**
Sand aluminium 1.00 x 0.950 m	**38513**
Sand aluminium made to measure, m^2	**38514**

PVC PARTITION

The partition can be made of concrete or PVC. It is designed to improve safety by preventing bathers from coming into contact with the roller shaft. It also prevents the pool-floor cleaning hose from being rolled up into the slats.

The partition is made up of 250 mm high PVC panels, internally reinforced with stainless steel. It is fastened with two white coated stainless steel U clamps, which are fastened to the tie beam support bracket.
Will be fastened to vertical walls.

For pools of more than 6 m width ask your AstralPool branch.

Partitions	Code
White partition 900 mm x 4 m	**31158**
White partition 900 mm x 5 m	**31159**
White partition 900 mm x 6 m	**31160**
White partition 1200 mm x 4 m	**31161**
White partition 1200 mm x 5 m	**31162**
White partition 1200 mm x 6 m	**31163**
White partition 1500 mm x 4 m	**33077**
White partition 1500 mm x 5 m	**33078**
White partition 1500 mm x 6 m	**38523**
H 900 mm white stainless steel U-shaped brackets to fasten to wall	**31164**
H 1200 mm white stainless steel U-shaped brackets to fasten to wall	**31165**
H 1500 mm white stainless steel U-shaped brackets to fasten to wall	**33084**
H 900 mm on tie-beam bracket white stainless steel U-shaped brackets to fasten to wall	**33083**
S.S. U clamps colour White H 1200 mm on beam bracket	**38549**
S.S. U clamps colour White H 1500 mm on beam bracket	**38550**

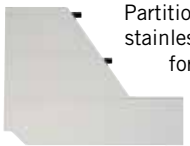

Partition panel with stainless steel reinforcement



U-bracket for fastening to the beam supports



U-bracket for fastening to wall

AUTOMATIC COVERS: PVC SLATS



WHITE



SAND



LIGHT



MEDIUM GREY

PVC slats

The AstralPool automatic cover uses hollow extrusion PVC watertight slats. The end-caps welded at both ends ensure the tightness of the slats and the 20mm wide cap flaps can assure the total length of the slat. Flaps can also be 10 or 30 mm, altering the total width of the pool cover.

The slats measure 71.4 mm long and are 17 mm thick, so that they are able to float. To prevent stains, particularly organic ones, the slats are stabilized with calcium and zinc.

To ensure a cover blends in with its surroundings, a number of slat models are available: white, sand, blue and grey.

Length of pool	Bobbin for a Ø 146 mm aluminium shaft (used for pools up to 6 m in width)
1 m	220 mm
2 m	290 mm
3 m	320 mm
4 m	360 mm
5 m	390 mm
6 m	430 mm
7 m	460 mm
8 m	470 mm
9 m	490 mm
10 m	530 mm
11 m	540 mm
12 m	560 mm

	Ref.	Code
Bracket cut	060413	**31180**
In shape cut	060814	**38735**

Pool width (m)	White		Sand		Grey		Medium Grey	
	Ref.	Code	Ref.	Code	Ref.	Code	Ref.	Code
width ≤ 3.53	060540	**34755**	060546	**34761**	060645	**40998**	061857	**061857**
3.53 < width ≤ 4.03	060400	**31168**	060406	**31169**	060647	**41000**	061858	**061858**
4.00 < width ≤ 4.50	060541	**34756**	060547	**34762**	060648	**41001**	061859	**061859**
4.53 < width ≤ 5.03	060402	**31172**	060407	**31173**	060649	**40761**	061860I	**061860I**
5.03 < width ≤ 5.53	060542	**34757**	060548	**34763**	060650	**41002**	061861I	**061861I**
5.53 < width ≤ 6.03	060404	**31176**	060408	**31177**	060651	**41003**	061862	**061862**
6.03 < width ≤ 7.03	060405	**31900**	060409	**31901**	060652	**40762**	061863	**061863**
7.03 < width ≤ 8.03	060399	**31905**	060418	**31906**	060653	**41004**	061864	**061864**
8.03 < width ≤ 9.03	060582	**35132**	060586	**35134**	061262	**54588**	061865	**061865**
9.03 < width ≤ 10.03	060583	**35133**	060587	**35135**	061406	**54589**	061866	**061866**
10.03 < width ≤ 11.03	060398	**33112ANT**	060588	**35136**	061407	**54590**	061867	**061867**

Please enquire for larger widths.

PVC slat accessories





Caps for grey polycarbonate slats	Code
Right plug TRANSPARENT	**070243**
Left plug TRANSPARENT	**070242**
Right plug SOLAR GREY	**907557**
Left plug SOLAR GREY	**907556**

AUTOMATIC COVERS: STEP SLATS



Step slats

In order to adapt to any swimming pool shape, three different standard geometric shapes are available, thus ensuring a perfect fit to the outline of a pool and maximum safety.

The shapes available are: Roman steps, Straight steps and Trapezoidal steps.

METHOD FOR CALCULATING STEPS SLATS

ROMAN STEPS

Location:
It must be located on the side opposite to the cover shaft.

Step price:
Roman step pricelist.

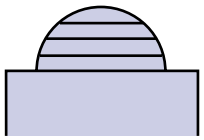

ISOSCELES TRAPEZOIDAL STEPS

Location:
Located in front of the cover.

Step price:
Trapezoidal step pricelist.

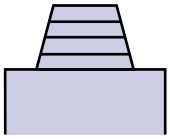

STRAIGHT STEPS

Location:
a) Located in front of the cover shaft.

Step price:
Straight step price.

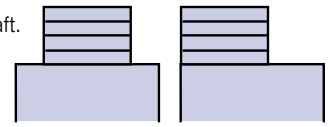

Location:
b) Located next to the cover.

Step price:
Slat pricelist per metre length
D x (C + 1 m).

• The length of the shaft (D) includes the width of the pool (A) + the depth of the steps (E).

NOTE FOR SIDE STEPS:
Total slat cost calculation:
Step price + slat price (A x B)

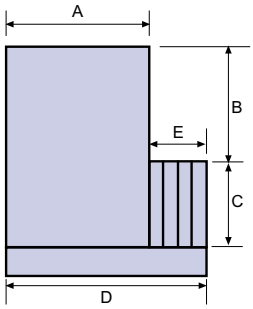

RECTANGULAR TRAPEZOIDAL STEPS

Location:
a) Located in front of the cover shaft.

Step price:
Trapezoidal step pricelist.

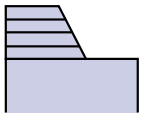

Location:
b) Located next to the cover.

Step price:
Slat price per metre length
D x (C + 1 m) + slat cutting surcharge for custom cutting per metre length.

• Length of D axis includes A length of pool + E depth of step

NOTE FOR SIDE STEPS:
Total slat cost calculation:
Step price + slat price (A x B)

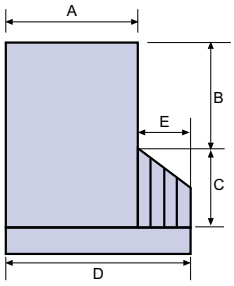

Description	white	Sand	Blue	Grey	Medium Grey
Roman step bracket cut					
Ø 3 m	**31182**	**31183**	**31184**	**41043**	**061868**
Ø 4 m	**31186**	**31187**	**31188**	**41044**	**061869**
Roman step in-shape cut					
Ø 3 m	**37094**	**37188**	**37190**	**41045**	**061870**
Ø 4 m	**37095**	**37189**	**37191**	**41046**	**061871**
Straight steps					
2 x 1,5 m	**31190**	**31191**	**31192**	**41047**	**061872**
2,5 x 2 m	**31194**	**31195**	**31196**	**41048**	**061873**
Trapezoidal step bracket cut					
base 3 m	**31198**	**31199**	**31200**	**41049**	**061874**
base 4 m	**31202**		**31204**	**41050**	**061875**
Shape-cut Trapezoidal ladder					
base 3 m	**37098**	**37196**	**37198**	**41051**	**061876**
base 4 m	**37099**	**37197**	**37199**	**41052**	**061877**

Larger steps: use surplus cut-outs in shape 38735 or bracket 31180 per metre length.

AUTOMATIC COVERS: POLYCARBONATE SLATS AND STEPS



SOLAR BLUE



TRANSPARENT



SOLAR TRANSPARENT



SOLAR GREY

Norme NF 90-308

Polycarbonate slats

Main advantages of polycarbonate slats:

- Strong impact resistance: Polycarbonate slats are approximately 8 times more resistant than PVC slats.
- Heat resistance: the deformation point is 140º compared to 80º for PVC.
- Very good ageing resistance thanks to UV protection layer on the top of the slat.
- Polycarbonate's lower density means the slats float better.
- Compliant with standard NF P 90-308.
- 3-year warranty
- Slat dimensions: 71 x 17 mm.

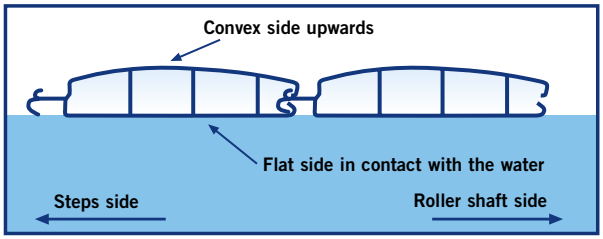

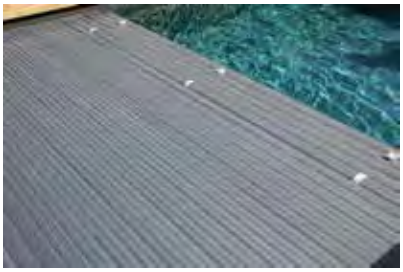

Pool length (m)	SOLAR BLUE	TRANSPARENT	SOLAR TRANSPARENT	SOLAR GREY
long < 4.03 m	061547	070066	070420	070266
4.03 m < long < 5.03 m	061548	070067	070421	070265
5.03 m < long < 6.03 m	061549	070068	070422	070267
6.03 m < long < 7.03 m	061550	070069	070423	070268
7.03 m < long < 8.03 m	061551	070070	070424	070269

For bigger widths, please enquire. ml = metre length. Available in other colours, please enquire.

Polycarbonate steps.

Stair type and measurements	SOLAR BLUE	TRANSPARENT	SOLAR TRANSPARENT	SOLAR GREY
Roman step bracket cut diam < 3 m	061604	070081	070425	070270
Roman step bracket cut 3 m < diam < 4 m	061505	070082	070426	070271
Roman step bracket cut max 2 m depth 1.5 m	061606	070085	070427	070272
Roman step bracket cut max 2.5 m depth 2 m	061607	070086	070428	070273
Trapezoidal step bracket cut max 3 m	061608	070087	070429	070274
Trapezoidal step bracket cut max 4 m	061609	070088	070430	070275



Polycarbonate slat accessories

Caps for grey polycarbonate slats	Code
Right plug TRANSPARENT	070243
Left plug TRANSPARENT	070242
Right plug SOLAR BLUE	070259
Left plug SOLAR BLUE	070260
Right plug SOLAR GREY	907557
Left plug SOLAR GREY	907556

AUTOMATIC COVERS: ACCESSORIES



Safety systems in AISI-316 stainless steel (glossy)

Thickness: 15.3 mm
- Height: 52.1 mm
- Width: 30 mm

Aesthetics: In glossy AISI-316 stainless steel + coloured strap


White


Sand


Grey


Blue

Easy to handle



Easy to install: fastens to wall or on surface at two possible heights





Liner accessories	Code
S.S. safety system for fastening to wall with white PVC strap	**070317**
S.S. safety system for fastening to surface (height of 50 mm) with white PVC strap	**070318**
S.S. safety system for fastening to surface (height of 100 mm) with white PVC strap	**070321**
S.S. safety system for fastening to wall with sand PVC strap	**070322**
S.S. safety system for fastening to surface (height of 50 mm) with sand PVC strap	**070323**
S.S. safety system for fastening to surface (height of 100 mm) with sand PVC strap	**070324**
S.S. safety system for fastening to wall with grey PVC strap	**070328**
S.S. safety system for fastening to surface (height of 50 mm) with grey PVC strap	**070329**
S.S. safety system for fastening to surface (height of 100 mm) with grey PVC strap	**070330**
S.S. safety system for fastening to wall with blue PVC strap	**070331**
S.S. safety system for fastening to surface (height of 50 mm) with blue PVC strap	**070332**
S.S. safety system for fastening to surface (height of 100 mm) with blue PVC strap	**070333**



Fabric strap tying system

Good value for money.

Liner accessories	Code
Fabric safety system for fastening to white wall	**070316**
Fabric safety system for fastening to white wall (height of 50 mm)	**070334**
Fabric safety system for fastening to white wall (height of 100 mm)	**070335**

Easy to install: fastens to wall or on surface at two possible heights



AUTOMATIC COVERS: ACCESSORIES



35131



34754



31944

ABS safety systems

We have a line of accessories for both using and maintaining automatic covers.

Liner accessories	Code
Lift-prevention bracket in ABS for wall fixing + belts	**34754**
ABS bracket + S.S. support to install under the coping stone + belt	**35131**
Overflow pool bracket	**31943**
Sky cover, above-ground model	**31944**
Slat-shaft joint belt	**31238**
Flange belt	**34774**

In compliance with the French standard NF P90-308 on swimming pool covers the following straps will be supplied according to the kind of cover and pool:

Interior pool width	No. of flanges for above-ground covers	No. of flanges for submerged covers
Width <= 3 m	4	2
3 m < width < = 5 m	6	3
5 m < width < = 7 m	8	4
7 m < width < = 10 m	10	5

AUTOMATIC COVERS: WIRELESS REMOTE CONTROLS WITH KEY



65931



65932

The days of performing stunts to open and close your cover are over!

In compliance with the French standard NF P90-308 for swimming pool covers the following straps will be supplied according to depending on the kind of cover and the swimming pool:

Wireless remote control with key

- Easy to install.
- No power supply required.
- Compatible with all AstralPool automatic covers.

Characteristics of the control box:

- Size: 82 x 72 x 74 mm.
- IP67.
- Power supply: One 9 V PP3 battery.
- Autonomy of battery: 1 year.
- Range: 15 metres.

Characteristics of the receptor:

- Size: 142.60 x 102.60 x 57 mm.
- IP55.
- Power supply: 12 to 24 VDC or 24 VAC.

Installation:

- The control box must be secured in a place from which all of the pool can be seen by the user.
- The receptor should be connected to the switchboard in the case of a submerged cover or directly to the motor in the case of an above-ground cover (the receptor must be place at the foot of the roller).

Warranty: 3 years.

	Code	Standard Pack	Standard Weight in kg	Standard Volume in m^3
Wireless control box	**65931**	-	-	-
Receptor for wireless remote control	**65932**	-	-	-
Wireless control box + receptor	**65933**	-	-	-

AUTOMATIC COVERS: WIRELESS REMOTE CONTROLS WITH KEY





Wireless remote control with key for submerged covers

Wireless remote control with key and stainless steel front plate Can replace the existing key switch used for submerged automatic covers.

- Wall assembly.
- Easy to install.
- No power supply required.
- Compatible with all AstralPool submerged automatic covers.
- 3-position key switch.
- Stainless steel front plate.
- Metal housing.
- IP54.
- Dimensions: L. 75 x D. 52 x H. 75 mm.
- 3-year warranty

	Code	Standard Pack	Standard Weight in kg	Standard Volume in m^3
Wireless remote control	**907504**	-	-	-



Remote control for automatic covers

Remote control that enables the automatic cover to be opened and closed without the need for keys.

- Easy to install.
- Compatible with all of Fluidra's automatic pool covers.

Remote control features:

- Dimensions: 80 x 40 x 10 mm.
- Power supply: A 12 V / 23 A battery.
- Autonomy of battery: 1 year.
- Range: 15 metres.

Characteristics of the receptor:

- Size: 142.60 x 102.60 x 57 mm.
- IP55.
- Power supply: 12 to 24 V DC or 24 V AC.

Installation:

- The receptor must be connected to the distribution board for submerged pool covers or directly to the motor for above-ground covers (with the receptor placed at the foot of cover).

3-year warranty

Not compliant with the French NF P 90-308 safety standard.

	Code	Standard Pack	Standard Weight in kg	Standard Volume in m^3
Full remote control	**070377**	-	-	-

AUTOMATIC COVERS: MANUFACTURING SPECIFICATIONS

+ info

PDB Product Database

See the manufacturer's data sheets for automatic pool covers in the AstralPool product database, available in the PRODUCTS section at www.astralpool.com.

AUTOMATIC COVERS: TECHNICAL SPECIFICATIONS

CABLE SECTION					
Power cord for all motor models, depending on distance (D) between motor and control cabinet			Limit switch cable (1)	Electrolysis cable (2)	Key switch cable (3)
D < 15 m	15 m ≤ D < 25 m	25 m ≤ D < 50 m			
2 x 4 mm²	2 x 6 mm²	2 x 10 mm²	3 x 1.5 mm²	3 x 1.5 mm²	3 x 1.5 mm²

The cables mentioned above are not supplied with the shutter.
(1) Cable to run from control box to motor (ATTENTION: for motor in cable axis of 4 x 1.5 mm²).
(2) Cable to run from control box to motor.
(3) Cable to run from control box to key switch (in the case of a remote key switch).

STANDARD HEIGHTS BETWEEN ABOVE-GROUND COVER BRACKETS	
Above-ground models	Standard heights between brackets
N-CARLIT / CARLIT ECO	Interior pool width + 14 cm
CARLIT SOLAR	Interior pool width + 11 cm
MOBILE BAY ON RAILS OR WHEELS	Interior pool width + 22 cm

BOBBIN Ø in mm (SHAFT + SLATS)			
Length of pool	Alu shaft Ø 146 mm	Alu shaft Ø 196 mm	S.S. shaft Ø 300 mm
1 m	220	260	335
2 m	290	320	370
3 m	320	350	405
4 m	360	390	440
5 m	390	420	472
6 m	430	450	472
7 m	460	470	510
8 m	470	490	540
9 m	490	520	540
10 m	530	530	575
11 m	540	560	575
12 m	560	570	610
13 m	590	590	610
14 m	600	610	645
15 m	640	630	645
16 m	660	640	680
17 m	680	660	680
18 m	700	680	715
19 m	720	700	715
20 m	730	720	750
23 m	-	-	800
25 m	-	-	850



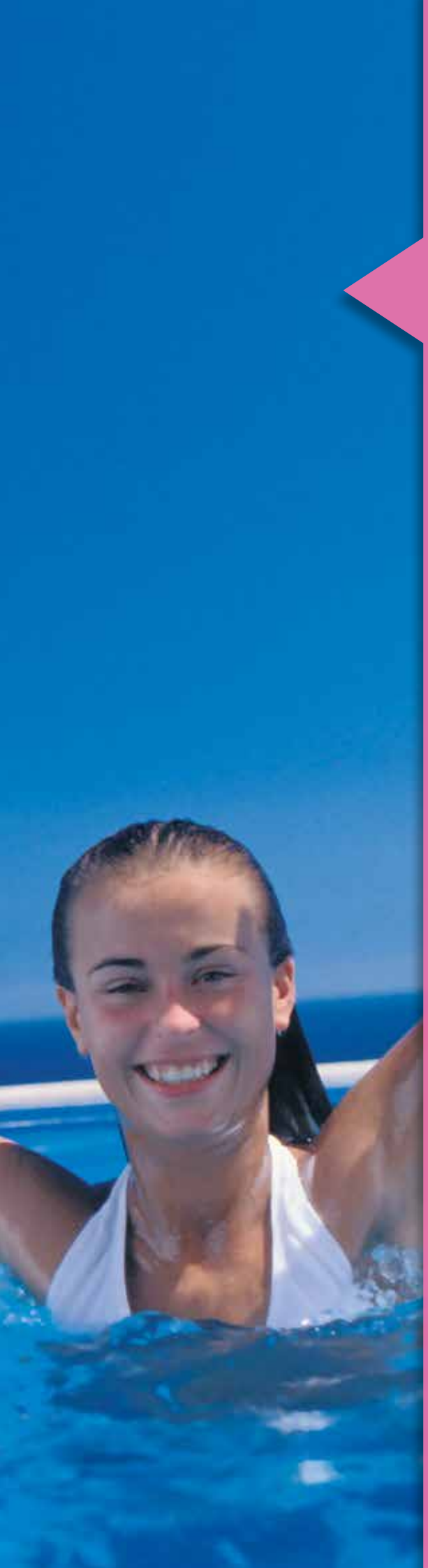

PVC FITTINGS FOR POOLS

337 • Fitt B-Active and Fitt Idroflex
338 • Pressure fluid handling PVC PN-16 fittings
340 • Pressure PVC valves
341 • Pressure fluid handling PVC accessories
342 • Filter ring manifolds for ¾" laterals
343 • Filter ring manifolds for 1" laterals
344 • Diffuser filter
344 • Collectors for valve manifolds

definitely ingenious

ASSURED TRACEABILITY
Sub-layer marking, indelible.

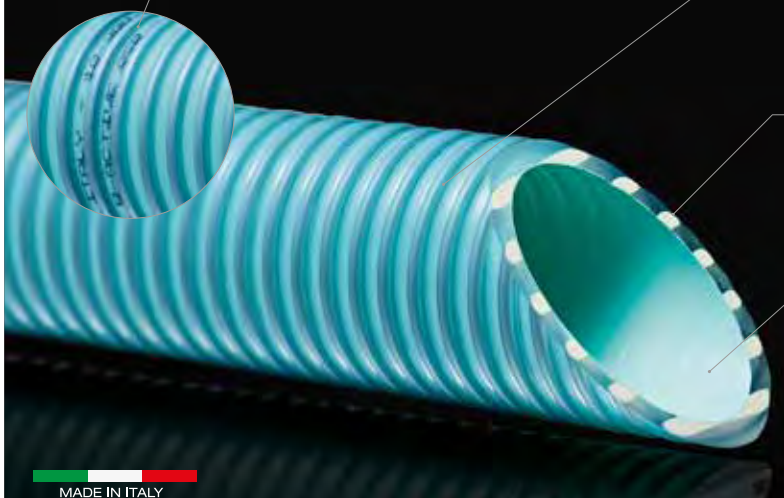

ASSURED RESISTANCE
The lining of the rigid spiral (Spiral Protection Barrier) acts as a barrier that prevents premature embrittlement due to environmental stress cracking (ESC).

SPIRAL PROTECTION BARRIER
Patented

ASSURED FLEXIBILITY
The spiral with D-Shape cross-section is extremely resistant to crushing (up to 34 kN/m2). Combined with the use of premium materials, it guarantees high flexibility and a smaller radius of curvature (up to 125 mm).

D-SHAPE
Patent pending

ASSURED PROTECTION
La pellicola CDS (Chlorine Defence System) The CDS (Chlorine Defence System) film offers extensive protection even against high-chlorine water and acidic environments, guaranteeing lasting performance.

CHLORINE DEFENCE SYSTEM
Patented

MADE IN ITALY

10 YR GUARANTEE*

10 YR INSURANCE* COVERAGE



* FITT S.p.A. offers a 10-year warranty and a special 10-year insurance coverage for all damages caused to third parties, and includes any costs for excavations, dismantling and assembling of the hose and backfilling.
For further details visit the website bactive.fitt.it.

fitt b-active

RESISTANT. GUARANTEED. SAFE.

FITT B-Active is the hose for swimming pool systems that offers "dual" protection with the 10-year insurance coverage and warranty, thanks to its patented technologies and indelible traceability.
The product is designed and made entirely in Italy.

BACTIVE.FITT.IT

fitt
TECHNOLOGY FLOW

INDUSTRIAL DIVISION

FITT B-ACTIVE AND FITT IDROFLEX

Fitt B-active

TECHNICAL FEATURES

Product	external Ø (mm)	Pressure (bar)	Pressure distribution (bar)	Drainage (m H_2O)	Bend radius (mm)	Ring stiffness (kN/m²)
FITT B-ACTIVE Ø50	50	6	18	9	125	34
FITT B-ACTIVE Ø63	63	4	12	9	165	22

Logistical features

Code	Product	external Ø (mm)	Roll length (m)	Weight (kg/roll)	Quantity (roll/pal)	Pallet dimensions (mm)
69860	FITT B-ACTIVE Ø50 25m	50	25	19	12	800x1600xH1240
69861	FITT B-ACTIVE Ø50 50m	50	50	37,5	8	800x1600xH1360
69862	FITT B-ACTIVE Ø63 25m	63	25	24,5	6	1200x1000xH1280

Mechanical and chemical performance tests were run both internally and with the collaboration of Padua University/DTG Laboratory. Test certified by TÜV (test record no. MEC16173.00).

Complies with European Directive (EU) 10/2011 for A-B-C simulants
Operating temperature -10°C/+60°C.
Formula with phthalate content ≤ 0.1 %.

NB: Tolerances comply with standard UNI EN ISO 1307: 2008. Thermoplastic products subject to deformation due to outdoor ambient temperature and retraction; longitude tolerance is ± 5%.

TÜV SÜD
Conforms to the EN ISO 3994:2014 standard
TÜV approval no. B 17 04 55285 007

Fitt idroflex

Code	Product	External Ø (mm)	Operating pressure (bar)	Drainage (m H_2O)	Roll length (m)	Weight (kg/roll)	Quantity (roll/pal)	Pallet dimensions (mm)
69852	FITT IDROFLEX Ø25 50m	25	7	7	50	12,5	12	800x1200xH1200
69853	FITT IDROFLEX Ø32 50m	32	7	7	50	21,0	16	1200x1200xH1200
69855	FITT IDROFLEX Ø40 25m	40	5	7	25	15,5	16	1200x1200xH1200
69854	FITT IDROFLEX Ø40 50m	40	5	7	50	30,5	5	800x1200xH1200
69857	FITT IDROFLEX Ø50 25m	50	5	7	25	16	12	800x1600xH1240
69856	FITT IDROFLEX Ø50 50m	50	5	7	25	31,5	8	800x1600xH1360
69858	FITT IDROFLEX Ø63 25m	63	4	7	25	23	6	1200x1000xH1280
69859	FITT IDROFLEX Ø75 25m	75	2,5	6	25	37	3	1200x1200xH1200
69963-032 L25	FITT IDROFLEX Ø75 25m							
69966-020 L25	FITT IDROFLEX Ø75 25m							

PRESSURE FLUID HANDLING PVC PN-16 FITTINGS



PVC 90° elbow solvent socket

	Code	Standard Pack	Standard Weight in kg	Standard Volume in m^3
Ø 50 mm	**32588**	70	8.67	0.0408
Ø 63 mm	**32589**	36	7.86	0.0408
Ø 75	**01718**	21	8.6	0.0408
Ø 90 mm	**01719**	12	8.7	0.0408
Ø 110 mm	**01720**	14	17.8	0.082



PVC 45° elbow solvent socket

	Code	Standard Pack	Standard Weight in kg	Standard Volume in m^3
Ø 50 mm	**32590**	40	3.72	0.0204
Ø 63 mm	**32591**	20	3.56	0.0204
Ø 75 mm	**01752**	25	8.2	0.0408
Ø 90 mm	**01753**	15	8.3	0.0408
Ø 110 mm	**01754**	16	13.8	0.082



PVC-Tee 90° solvent socket

	Code	Standard Pack	Standard Weight in kg	Standard Volume in m^3
Ø 50 mm	**32592**	48	8.95	0.0408
Ø 63 mm	**32593**	30	9.73	0.0408
Ø 75 mm	**01786**	15	8.4	0.0408
Ø 90 mm	**01787**	8	7.4	0.0408
Ø 110 mm	**01788**	10	16.4	0.082



PVC union solvent socket

	Code	Standard Pack	Standard Weight in kg	Standard Volume in m^3
Ø 50 mm	**32594**	60	4.48	0.0204
Ø 63 mm	**32595**	35	3.98	0.0204
Ø 63 mm	**32595**	35	3.98	0.0204
Ø 75 mm	**01878**	14	3.5	0.02
Ø 90 mm	**01879**	18	7.6	0.0408
Ø 110 mm	**01880**	12	8.5	0.0408

PRESSURE FLUID HANDLING PVC PN-16 FITTINGS



PVC reducing bush solvent socket

	Code	Standard Pack	Standard Weight in kg	Standard Volume in m³
Ø 63 mm x 50 mm	**32596**	48	3.08	0.0102
Ø 75 mm x 63 mm	**01928**	28	2.2	0.01
Ø 75 mm x 50 mm	**18685**	28	3.3	0.01
Ø 90 mm x 75 mm	**01929**	36	5.1	0.02
Ø 90 mm x 63 mm	**18687**	36	6	0.02
Ø 90 mm x 50 mm	**18688**	36	6.4	0.02
Ø 110 mm x 90 mm	**01930**	16	4.3	0.02
Ø 110 mm x 75 mm	**18689**	16	5.1	0.02
Ø 110 mm x 63 mm	**18690**	16	5	0.02



PVC adaptor nipple: solvent socket & BSP male thread

	Code	Standard Pack	Standard Weight in kg	Standard Volume in m³
Ø 50 mm x 40 mm x 1½"	**32597**	24	2.48	0.0102
Ø 63 mm x 50 mm x 2"	**32598**	38	5.84	0.0204
Ø 75 mm x 63 mm x 2"½	**02091**	24	4.7	0.02
Ø 90 mm x 75 mm x 3"	**02094**	12	3.6	0.02
Ø 110 mm x 90 mm x 4"	**02097**	6	3.8	0.02



PVC adaptor bush: female solvent socket & BSP male thread

	Code	Standard Pack	Standard Weight in kg	Standard Volume in m³
Ø 50 mm x 1½"	**32599**	48	3.27	0.0102
Ø 63 mm x 2"	**32600**	50	5.60	0.0204
Ø 75 mm x 2"½	**02108**	24	6.1	0.02
Ø 90 mm x 3"	**02109**	28	11.7	0.0408
Ø 110 mm x 4"	**02110**	10	6.3	0.0408



PVC 3 piece union solvent socket

	Code	Standard Pack	Standard Weight in kg	Standard Volume in m³
Ø 50 mm	**32601**	30	5.80	0.0204
Ø 63 mm	**32602**	12	4.44	0.0204
Ø 75 mm	**02333**	16	8.7	0.0408
Ø 90 mm	**02334**	12	9.5	0.0408
Ø 110 mm	**02335**	5	7.6	0.0408



PVC 3 piece union: female solvent socket & BSP male thread

	Code	Standard Pack	Standard Weight in kg	Standard Volume in m³
Ø 50 mm x 1½"	**32603**	30	6.70	0.0204
Ø 63 mm x 2"	**32604**	12	5.24	0.0204
Ø 50 x 1"½ (with o-ring)	**07716**	30	6.9	0.02
Ø 63 x 2" (with o-ring)	**07717**	12	4.9	0.02

PRESSURE PVC VALVES



PVC ball valve PN-12

HDPE (polythene) ball seat. EPDM O-rings. "Antiblock" system.

	Code	Standard Pack	Standard Weight in kg	Standard Volume in m^3
Ø 50 mm	**41941**	10	7.61	0.0204
Ø 63 mm	**41942**	10	11.80	0.0408



PVC ball valve (STD PN16)

HDPE (polythene) ball seat. EPDM O-rings. "Antiblock" system.

	Code	Standard Pack	Standard Weight in kg	Standard Volume in m^3
Ø 50 mm	**36505**	10	7.40	0.0204
Ø 63 mm	**36506**	10	12.70	0.0408
Ø 75 mm	**36507**	4	9.2	0.0408
Ø 90 mm	**36508**	2	7.2	0.0408
Ø 110 mm	**36509**	1	8.2	0.0408



PVC spring check valve

Spring in stainless steel. EPDM O-rings. Vertical or horizontal installation.

	Code	Standard Pack	Standard Weight in kg	Standard Volume in m^3
Ø 50 mm	**09015**	12	7.80	0.0204
Ø 63 mm	**09016**	10	11.70	0.0408
Ø 75 mm	**09017**	4	8.5	0.0408
Ø 90 mm	**09018**	2	7.1	0.0408
Ø 110 mm (DN80)	**09019**	2	7.6	0.0408



Manual valves

3-way rotary disc valve

3-way rotary disc valve in PVC-U with rotary flap to shut off one port. Can be used in circuits where the working pressure is not above 6 bar (90 psi); includes a lever that shows the closed port.

Sizes: Ø 50-63 mm and Ø 63-75 mm. Available in manual (lever) or automatic (electric actuator) mode. Designed for use in pools and spas. The manual valve can have 2 open ports and 1 shut off, 3 open ports or a partial adjustable opening, whilst the electric actuator can be turned from 90º to 180º and has a 220 VAC or 24 VAC connection.

	Code	Standard Pack	Standard Weight in kg	Standard Volume in m^3
3-way rotary disc valve solvent socket				
Manual Ø 63-75 mm	**41862**	4	4.04	0.041
Manual Ø 50-63 mm	**15765**	8	5.2	0.041
Automatic Ø 50-63 mm. 220 VAC (180º)	**41863**	1	1.4	0.041
Automatic Ø 63-75 mm. 220 VAC (180º)	**59959**	1	1.85	0.041
Automatic Ø 50-63 mm. 24 VAC (180º)	**45866**	1	1.4	0.041
Automatic Ø 63-75 mm. 24 VAC (180º)	**59960**	1	1.85	0.041
Automatic Ø 63-75 mm. 220 VAC (90º)	**41864**	1	1.85	0.041
Automatic Ø 63-75 mm. 24 VAC (90º)	**43730**	1	1.85	0.041



Automatic valves

* Ask Cepex Catalogue for automatic ball valves codes

PRESSURE FLUID HANDLING PVC ACCESSORIES



PVC pipe PN-10

	Code	Standard Pack	Standard Weight in kg	Standard Volume in m^3
Ø 40 mm	**02708**	5 m	-	-
Ø 50 mm	**02709**	5 m	45.0	1.14
Ø 63 mm	**02710**	6 m	72.0	1.40
Ø 75 mm	**02711**	6 m	-	-
Ø 90 mm	**02712**	6 m	-	-
Ø 110 mm	**02713**	6 m	-	-
Ø 125 mm	**02714**	6 m	-	-
Ø 140 mm	**02715**	6 m	-	-
Ø 160 mm	**02716**	6 m	-	-
Ø 180 mm	**02717**	6 m	-	-
Ø 200 mm	**02718**	6 m	-	-
Ø 250 mm	**02719**	6 m	-	-
Ø 315 mm	**02720**	6 m	-	-



Semi-rigid hose

Made of PVC to glue to pressure fittings using PVC adhesive grey colour.

	Code	Standard Pack	Standard Weight in kg	Standard Volume in m^3
Ø 16 mm	**34587**	25 m	3.2	0.030
Ø 16 mm	**34586**	50 m	6.2	0.040
Ø 20 mm	**30754**	25 m	4.0	0.040
Ø 20 mm	**28570**	50 m	9.1	0.060
Ø 25 mm	**30755**	25 m	6.0	0.050
Ø 25 mm	**28571**	50 m	11.0	0.042
Ø 32 mm	**30756**	25 m	9.6	0.070
Ø 32 mm	**28572**	50 m	16.7	0.065
Ø 40 mm	**30757**	25 m	12.3	0.110
Ø 40 mm	**28573**	50 m	23.0	0.109
Ø 50 mm	**30758**	25 m	18.4	0.150
Ø 50 mm	**28574**	50 m	37.0	0.178
Ø 63 mm	**28575**	25 m	49.5	1.140
Ø 75 mm	**34588**	25 m	33.3	0.300



PVC Solvent

	Code	Standard Pack	Standard Weight in kg	Standard Volume in m^3
0.125 l	**54740**	28	4.7	0.026
0.5 l	**02432**	15	8.1	0.026
1 l	**02431**	12	11.0	0.036



PVC glue

	Code	Standard Pack	Standard Weight in kg	Standard Volume in m^3
0,25 l	**02429**	30	10.0	0.024
0,50 l	**02427**	15	8.0	0.026
1 l	**02426**	12	13.0	0.036
0.50 l with paint brush	**09043**	-	-	-
1 l with paint brush	**09044**	-	-	-

PRESSURE FLUID HANDLING PVC ACCESSORIES



PVC Cleaner

Liquid cleaner specially adequate for cleaning and degreasing pipes, coupling sockets and other PVC rigid fittings before gluing them together, and for removing excess glue.

	Code	Standard Pack	Standard Weight in kg	Standard Volume in m^3
Cleaner 500 ml	**57685**	-	-	-
Cleaner 1000 ml	**57687**	-	-	-



Blue Adhesive, extra quick drying for flexible and rigid PVC pipes

For large diameter pressure pipes. Slow setting time, allowing correct positioning of the fittings and perfect cementation.
Supplied with brush.

	Code	Standard Pack	Standard Weight in kg	Standard Volume in m^3
250 ml	**56217**	36	11.18	0.02
500 ml	**56218**	24	13.50	0.02
1000 ml	**56221**	12	12.90	0.02



Blue Adhesive, extra quick drying for flexible and rigid PVC pipes

Special for pools. For use in pool installations. Its high Gel composition and covering capacity gives perfect cementation. Supplied with brush.

	Code	Standard Pack	Standard Weight in kg	Standard Volume in m^3
250 ml	**57680**	36	11.20	0.02
500 ml	**57682**	24	13.50	0.02
1000 ml	**57683**	12	12.90	0.02

FILTER RING MANIFOLDS FOR ¾" LATERALS



8 lateral ring manifold

Made of PVC, inner Ø 50 mm. For ¾" collector arms.

Code	Standard Pack	Standard Weight in kg	Standard Volume in m^3
00624	12	4.0	0.017

12 lateral ring manifold

Made of PVC, inner Ø 63 mm. For ¾" collector arms.

Code	Standard Pack	Standard Weight in kg	Standard Volume in m^3
00625	6	3.0	0.310

FILTER RING MANIFOLDS FOR 1" LATERALS



¾" Laterals

0.3 mm slots.

	Code	Standard Pack	Standard Weight in kg	Standard Volume in m³
Length 225 mm	**00626**	50	2.0	0.017
Length 160 mm	**00627**	50	2.0	0.017
Length 110 mm	**00628**	50	2.0	0.008
Length 100 mm (extensions)	**00629**	50	2.0	0.008



Bush coupling

For laterals. In PVC.

	Code	Standard Pack	Standard Weight in kg	Standard Volume in m³
Inside threading ¾"	**00630**	50	2.0	0.003

FILTER RING MANIFOLDS FOR 1" LATERALS



8 lateral ring manifold

Made of PVC, inner Ø 50 mm. For 1" collector arms.

Code	Standard Pack	Standard Weight in kg	Standard Volume in m³
06433	12	4.0	0.017

12 lateral ring manifold

Made of PVC, inner Ø 63 mm. For 1" collector arms.

Code	Standard Pack	Standard Weight in kg	Standard Volume in m³
06434	6	3.0	0.310



1" laterals

0.3 mm slots.

	Code	Standard Pack	Standard Weight in kg	Standard Volume in m³
Length 225 mm	**06435**	50	2.0	0.017
Length 160 mm	**06436**	50	2.0	0.017
Length 110 mm	**06437**	50	2.0	0.008
Length 100 mm (extensions)	**06438**	50	2.0	0.008



Bush coupling

For laterals. In PVC.

	Code	Standard Pack	Standard Weight in kg	Standard Volume in m³
Inner threading 1"	**06439**	-	-	-

DIFFUSER FILTER



For Ø 50 mm Pipe

Code	Standard Pack	Standard Weight in kg	Standard Volume in m^3
00645	6	1.0	0.009

For Ø 63 mm Pipe

Code	Standard Pack	Standard Weight in kg	Standard Volume in m^3
00646	6	2.0	0.023

COLLECTORS FOR VALVE MANIFOLDS



Collector pipe for valve manifold

Made of PVC. Inlet connections, inner Ø 50 mm and 63 mm. Outlet connections Ø 50 and 63 mm.

	Code	Standard Pack	Standard Weight in kg	Standard Volume in m^3
Connections Ø 50 mm	**31877**	1	-	-
Connections Ø 63 mm	**34407**	1	-	-



POOLS

Above ground pools

Playa

347 • Playa MINIPOOL
348 • Playa BUBBLES
349 • Playa HEATING & BUBBLES
350 • Playa accessories
352 • Playa LIVING

Dolce Vita

358 • Dolce Vita RATTAN
360 • Dolce Vita DIVA
362 • Dolce Vita DIVA LTI
364 • Dolce Vita DIVA with automatic pool cover
366 • Dolce Vita YACHT
368 • Dolce Vita DIVINA
370 • Dolce Vita NAKED
372 • Dolce Vita accessories

POP!

382 • POP!
383 • POP! accessories

Inoxpool

385 • Inoxpool

PLAYA

PLAYA is an elegant mini-pool created from the great Italian design.
The gentle hydromassage, the heated water, the pleasantness of the hand woven fibers, invite you to relax in total wellness and allow you to enjoy it both indoors and outside the house. Playa Living is the evolution of Playa model with its soft cushions; it becomes a relaxing oasis, a real "lounge" that decorates the interior of the house or outdoor spaces.



Pool liner



Playa skimmer

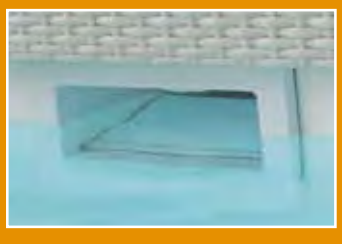

LED spotlight



Air massage



LINER
High strength liner in durable polyester and polymer. White color.

STRUCTURE
Hot galvanized coated steel and inox steel structure, powdered epoxy.

AESTHETIC FINISHES
Wicker exterior panels on aluminum frame. Colors: Laghetto white, grey, coffee.

FILTRATION SYSTEM
Laghetto exclusive filtration system and water treatment.
Filtration system composed of:
One wall skimmer complete with pre-filter, cartridge filtre and pump.
Included: suction plate and brush for bottom cleaning.

LED SPOTLIGHT
Small, white, LED spotlight.
High brightness spotlight.

AIR MASSAGE
Air massage with bubbles.
Available for versions:
ONLY HYDRO
HYDRO & HEATER

HEATING
Water heating.
Only for HYDRO & HEATER version.

Sunbed



Playa Living elements



SUNBED (optional)
Nautical Sky fabric finish available in several colors.
Colors: natural, brown, grey, water.

PLAYA LIVING ELEMENTS
Playa Living elements with aluminium structure and wicker panels.
Available in several sizes and also with reclinable backrest. Matching cushions with nautical Sky fabric finish.



POOL WARRANTY: 5 YEARS

ACCESSORIES WARRANTY: 2 YEARS

ABOVE GROUND POOLS

Playa model MINIPOOL version

PLAYA

Sunbed (optional):
Nautical Sky fabric finish available in several colors.

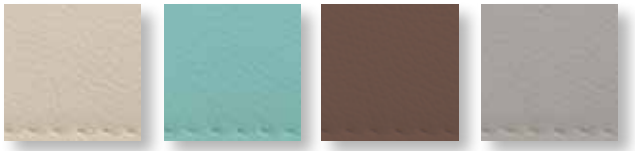

Filtration system composed of:
One wall skimmer complete with pre-filter, cartridge filter, 120 W, 12 V, class 2, synchronous pump with permanent magnet, max. flow 5500 l/h, complete with transformer. Included: suction plate and brush for bottom cleaning.

Internal structure

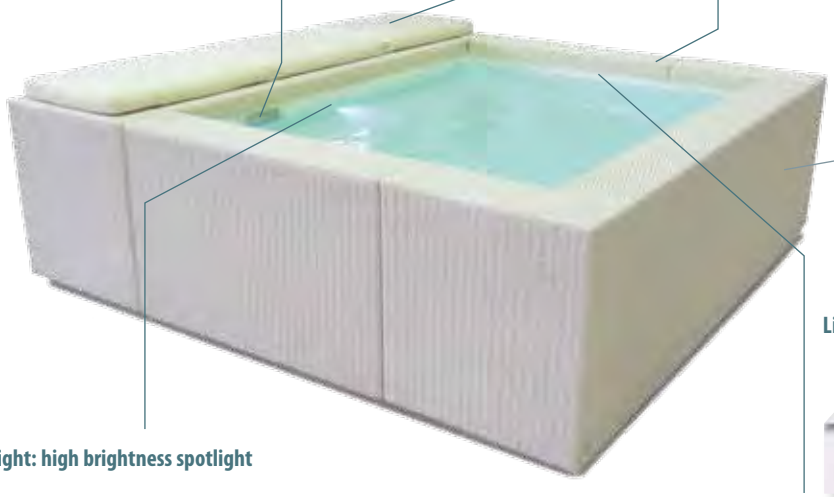

Exterior panels:
Handwoven fiber.



Liner:



LED spotlight: high brightness spotlight

Description	Total dimensions (W x L x H) cm	Water dimensions (W x L x H) cm	Water volume Litres	Packaging dimensions	Total gross weight Kg	N. pallets	Color panel model	Laghetto reference	Code
MiniPool Version. **Playa 1 - 220 x 220.** SINGLE CASE STRUCTURE - WHITE POOL LINER - 12 V FILTRATION SYSTEM WITH WALL SKIMMER - LED SPOT - WICKER PANELS	220x220x70	180x140x55	1200	80x230x h150	157	1	PLAYA1 COFFEE	KITDVPLA1BICF1G	**67338**
							PLAYA1 WHITE	KITDVPLA1BIBI1G	**67339**
							PLAYA1 GREY	KITDVPLA1BIGR1G	**69349**
MiniPool Version. **Playa 2 - 320 x 220..** SINGLE CASE STRUCTURE - WHITE POOL LINER - 12 V FILTRATION SYSTEM WITH WALL SKIMMER - LED SPOT - WICKER PANELS	220x320x70	180x240x55	2000	80x230x h170	183	1	PLAYA2 COFFEE	KITDVPLA2BICF1G	**67340**
							PLAYA2 WHITE	KITDVPLA2BIBI1G	**67341**
							PLAYA2 GREY	KITDVPLA2BIGR1G	**69351**
MiniPool Version. **Playa 3 - 420 x 220.** SINGLE CASE STRUCTURE - WHITE POOL LINER - 12 V FILTRATION SYSTEM WITH WALL SKIMMER - LED SPOT - WICKER PANELS	220x420x70	180x340x55	3000	80x230x h170	198	1	PLAYA3 COFFEE	KITDVPLA3BICF1G	**69355**
							PLAYA3 WHITE	KITDVPLA3BIBI1G	**69356**
							PLAYA3 GREY	KITDVPLA3BIGR1G	**69358**

POOL WARRANTY: 5 YEARS. ACCESSORIES WARRANTY: 2 YEARS.

ABOVE GROUND POOLS

Playa model BUBBLES version

PLAYA

Sunbed (optional):
Nautical Sky fabric finish available in several colors.

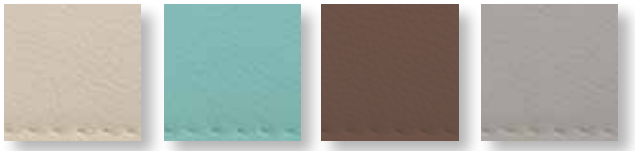

Laghetto filtration system composed of:

One wall skimmer complete with pre-filter and cartridge filter. Included: suction plate and brush for bottom cleaning.
ABS self-extinguishing technical box including: 130 W, 220 V, permanent magnets circulation pump, max flow 6700 l/h, max prevalence 3,65 m.
220 V, 700 W absorption, IPX5 class II, max flow 70 mc/h, max pressure 190 mbar, air blower.
Class II, 220/12 V 10 VA Led transformer.
Control unit complete with keyboard and display (IPX5 protected) for filtration cycles, blower and Led control.

Exterior panels:
Handwoven fiber.


Laghetto white - BI


coffee - CF


grey - GR

Internal structure



LED spotlight: high brightness spotlight

Liner:


white - BI

Description	Total dimensions (W x L x H) cm	Water dimensions (W x L x H) cm	Water volume Litres	Packaging dimensions	Total gross weight Kg	N. pallets	Color panel model	Laghetto reference	Code
Bubbles Version. **Playa 1 - 220 x 220.** SINGLE CASE STRUCTURE - WHITE POOL LINER - FILTRATION SYSTEM - AIR HYDROMASSAGE - LED SPOT - WICKER PANELS	220x220x70	180x140x55	1200	80x230x h150	172	1	PLAYA1 COFFEE	KITDVPLASB1BICF1G	**68198**
							PLAYA1 WHITE	KITDVPLASB1BIBI1G	**68199**
							PLAYA1 GREY	KITDVPLASB1BIGR1G	**69350**
Bubbles Version. **Playa 2 - 320 x 220.** SINGLE CASE STRUCTURE - WHITE POOL LINER - FILTRATION SYSTEM - AIR HYDROMASSAGE - LED SPOT - WICKER PANELS	220x320x70	180x240x55	2000	80x230x h180	198	1	PLAYA2 COFFEE	KITDVPLASB2BICF1G	**68197**
							PLAYA2 WHITE	KITDVPLASB2BIBI1G	**68200**
							PLAYA2 GREY	KITDVPLASB2BIGR1G	**69353**
Bubbles Version. **Playa 3 - 420 x 220.** SINGLE CASE STRUCTURE - WHITE POOL LINER - FILTRATION SYSTEM - AIR HYDROMASSAGE - LED SPOT - WICKER PANELS	220x420x70	180x340x55	3000	80x230x h180	213	1	PLAYA3 COFFEE	KITDVPLASB3BICF1G	**69359**
							PLAYA3 WHITE	KITDVPLASB3BIBI1G	**69360**
							PLAYA3 GREY	KITDVPLASB3BIGR1G	**69362**

POOL WARRANTY: 5 YEARS. ACCESSORIES WARRANTY: 2 YEARS.

ABOVE GROUND POOLS

Playa model HEATING & BUBBLES version

PLAYA

Sunbed (optional):
Nautical Sky fabric finish available in several colors.

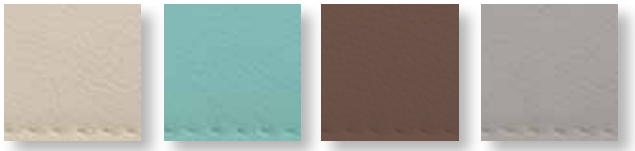

Laghetto filtration system composed of:

One wall skimmer complete with pre-filter and cartridge filter. Included: suction plate and brush for bottom cleaning.
Technical module self-extinguishing in ABS, including:
115 W, 220 V, induction circulation pump, max flow 7000 l/h, max prevalence 3 m.
230 V, 2000 W IPX5 electrical heater.
Heater max. power: + 15° C granted than the temperature of the version without heater (with isothermic cover installed).
220 V, 700 W absorption, IPX5 class II, max flow 70mc/h, max pressure 190 mbar, air blower. Class II,220/12 V 10 VA, Led transformer.
Control unit complete with keyboard and display (IPX5 protected) for heating, filtration cycles, blower and Led control.

Exterior panels:
Handwoven fiber.


Laghetto white - BI


coffee - CF


grey - GR

Internal structure

Isothermic cover



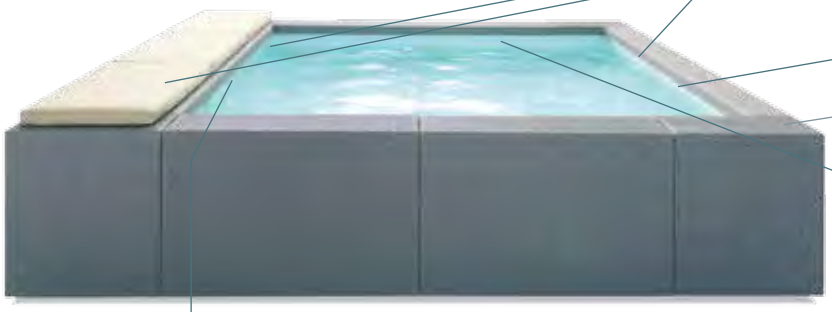

Liner:


white - BI

LED spotlight: high brightness spotlight

Description	Total dimensions (W x L x H) cm	Water dimensions (W x L x H) cm	Water volume Litres	Packaging dimensions	Total gross weight Kg	N. pallets	Color panel model	Laghetto reference	Code
Heating & bubbles version. **Playa 1 - 220 x 220.** SINGLE CASE STRUCTURE - WHITE POOL LINER - FILTRATION SYSTEM - HEATER AND AIR HYDROMASSAGE - LED SPOT - ISOTHERMIC COVER - WICKER PANELS	220x220x70	180x140x55	1200	80x230x h150	172	1	PLAYA1 COFFEE	KITDVPLARB1BICF1G	**67342**
							PLAYA1 WHITE	KITDVPLARB1BIBI1G	**67343**
							PLAYA1 GREY	KITDVPLARB1BIGR1G	**69352**
Heating & bubbles version. **Playa 2 - 320 x 220.** SINGLE CASE STRUCTURE - WHITE POOL LINER - FILTRATION SYSTEM - HEATER AND AIR HYDROMASSAGE - LED SPOT - ISOTHERMIC COVER - WICKER PANELS	220x320x70	180x240x55	2000	80x230x h180	198	1	PLAYA2 COFFEE	KITDVPLARB2BICF1G	**67344**
							PLAYA2 WHITE	KITDVPLARB2BIBI1G	**67345**
							PLAYA2 GREY	KITDVPLARB2BIGR1G	**69354**
Heating & bubbles version. **Playa 3 - 420 x 220.** SINGLE CASE STRUCTURE - WHITE POOL LINER - FILTRATION SYSTEM - HEATER AND AIR HYDROMASSAGE - LED SPOT - ISOTHERMIC COVER - WICKER PANELS	220x420x70	180x340x55	3000	80x230x h180	213	1	PLAYA3 COFFEE	KITDVPLARB3BICF1G	**69361**
							PLAYA3 WHITE	KITDVPLARB3BIBI1G	**69363**
							PLAYA3 GREY	KITDVPLARB3BIGR1G	**69364**

POOL WARRANTY: 5 YEARS. ACCESSORIES WARRANTY: 2 YEARS.

ABOVE GROUND POOLS

Playa accessories

PLAYA

Description	Packaging dimensions	Total gross weight Kg	Number of packages	Laghetto reference	Code
Playa 1 - 220x220 cm - standard cover	30x30x h15	3	1	CODVPLA1	**67346**
Playa 2 - 220x320 cm - standard cover	30x30x h15	3	1	CODVPLA2	**67348**
Playa 3 - 220x420 cm - standard cover	30x30x h15	4	1	CODVPLA3	**69408**
Sunbed Nautical Sky fabric finish - natural color	60x70x h25	3	1	DVPLALPSN	**67347**
Sunbed Nautical Sky fabric finish - water color	60x70x h25	3	1	DVPLALPSW	**68616**
Sunbed Nautical Sky fabric finish - brown color	60x70x h25	3	1	DVPLALPSB	**69405**
Sunbed Nautical Sky fabric finish - grey color	60x70x h25	3	1	DVPLALPSG	**69407**
Playa 1 isothermic foldable cover	60x70x h50	2	1	COGIDVPLA11G	**70889**
Playa 2 isothermic foldable cover	60x70x h50	2	1	COGIDVPLA21G	**70890**
Playa 3 isothermic foldable cover	60x70x h50	3	1	COGIDVPLA31G	**70891**

Sky Nautical fabric finish

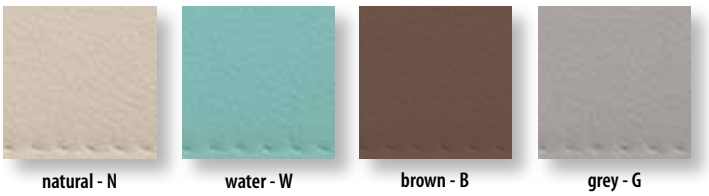



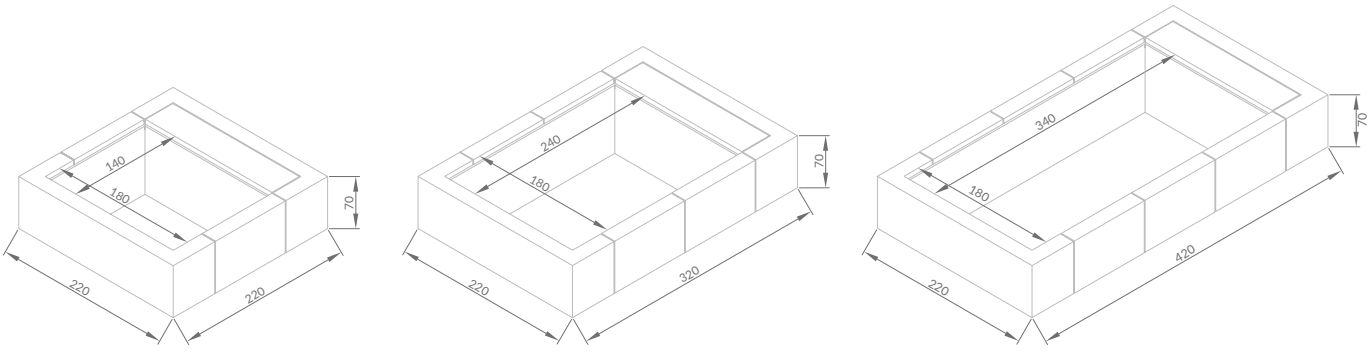

PLAYA 1 **PLAYA 2** **PLAYA 3**

Model	Box	Water size (m)	General dimensions (m)	Water height (cm)	Total height (cm)	Volume (l)
PLAYA1	1	1.40 x 1.80	2.20 x 2.20	55	70	1200
PLAYA2	1	2.40 x 1.80	3.20 x 2.20	55	70	2000
PLAYA3	1	3.40 x 1.80	4.20 x 2.20	55	70	3000

ABOVE GROUND POOLS

Playa for professional use

Bottom drain for the quick pool emptying

PLAYA

Studied for hotels and accommodation facilities.
Available in sizes 1 and 2 only and in hydro & heater version, including isothermic cover.

Special features:

Raised padded bottom (+ 6 cm compared to the standard version), AISI 316 stainless steel floor drain, connection with ball valve and 30 mm hose connector for external drain pipe.



Sunbed (optional):
Nautical Sky fabric finish available in several colors.

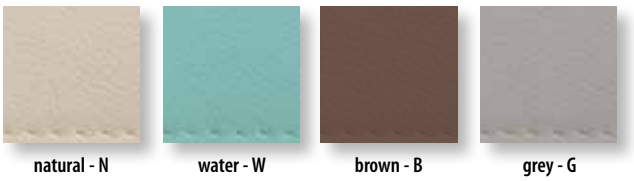

Exclusive Laghetto filtration system and water treatment

Internal structure

Isothermic cover



Exterior panels:
Handwoven fiber.


Laghetto white - BI

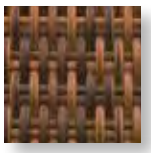
coffee - CF


grey - GR

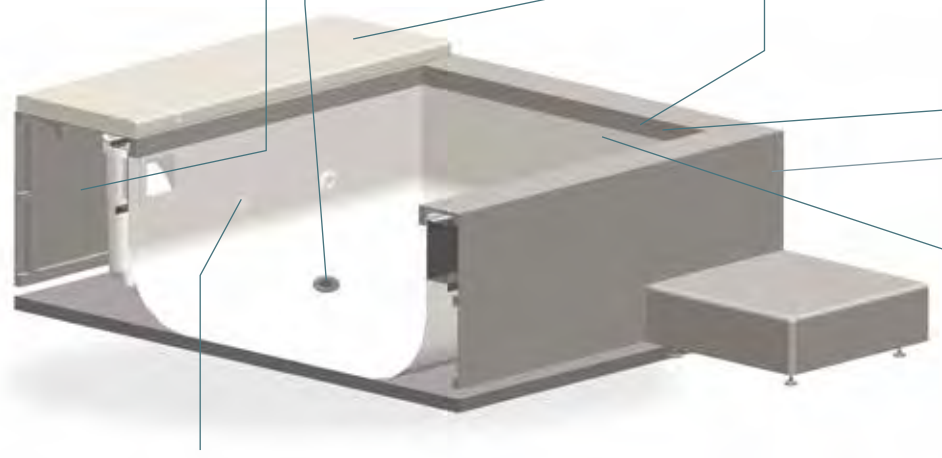

Liner:


white - BI

LED spotlight: high brightness spotlight

Description	Laghetto reference	Code
PLAYA 1 - Heating & Bubble + main drain - Laghetto white	KITDVPLARB1BIBISF	**71865**
PLAYA 1 - Heating & Bubble + main drain - Grey	KITDVPLARB1BIGRSF	**71866**
PLAYA 1 - Heating & Bubble + main drain - Coffee	KITDVPLARB1BICFSF	**71867**
PLAYA 2 - Heating & Bubble + main drain - Laghetto white	KITDVPLARB2BIBISF	**71868**
PLAYA 2 - Heating & Bubble + main drain - Grey	KITDVPLARB2BIGRSF	**71869**
PLAYA 2 - Heating & Bubble + main drain - Coffee	KITDVPLARB2BICFSF	**71870**

ABOVE GROUND POOLS

PLAYA LIVING

Playa Living is the evolution of Playa model with its soft cushions; it becomes a relaxing oasis, a real "lounge" that decorates the interior of the house or outdoor spaces.

PLAYA LIVING

PLAYA LIVING ELEMENTS

Playa Living elements with aluminium structure and wicker panels.
Available in several sizes and also with reclinable backrest. Matching cushions with nautical Sky fabric finish.



2 years WARRANTY GARANZIA

ACCESSORIES WARRANTY: 2 YEARS

AVAILABLE DIMENSIONS (cm)

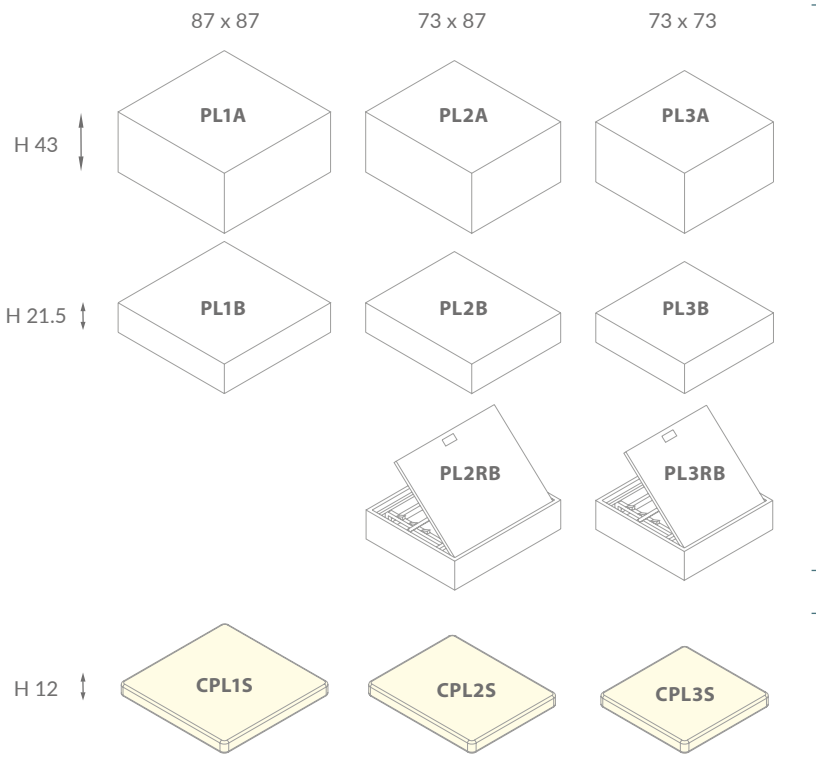

AVAILABLE COLORS

Handwoven fiber


Laghetto white - BI


coffee - CF


grey - GR



Nautical Sky fabric cushions


natural - N


water - W


brown - B


grey - G

ABOVE GROUND POOLS

PLAYA LIVING seat element with reclinable backrest

PLAYA LIVING

CONFIGURATION EXAMPLES

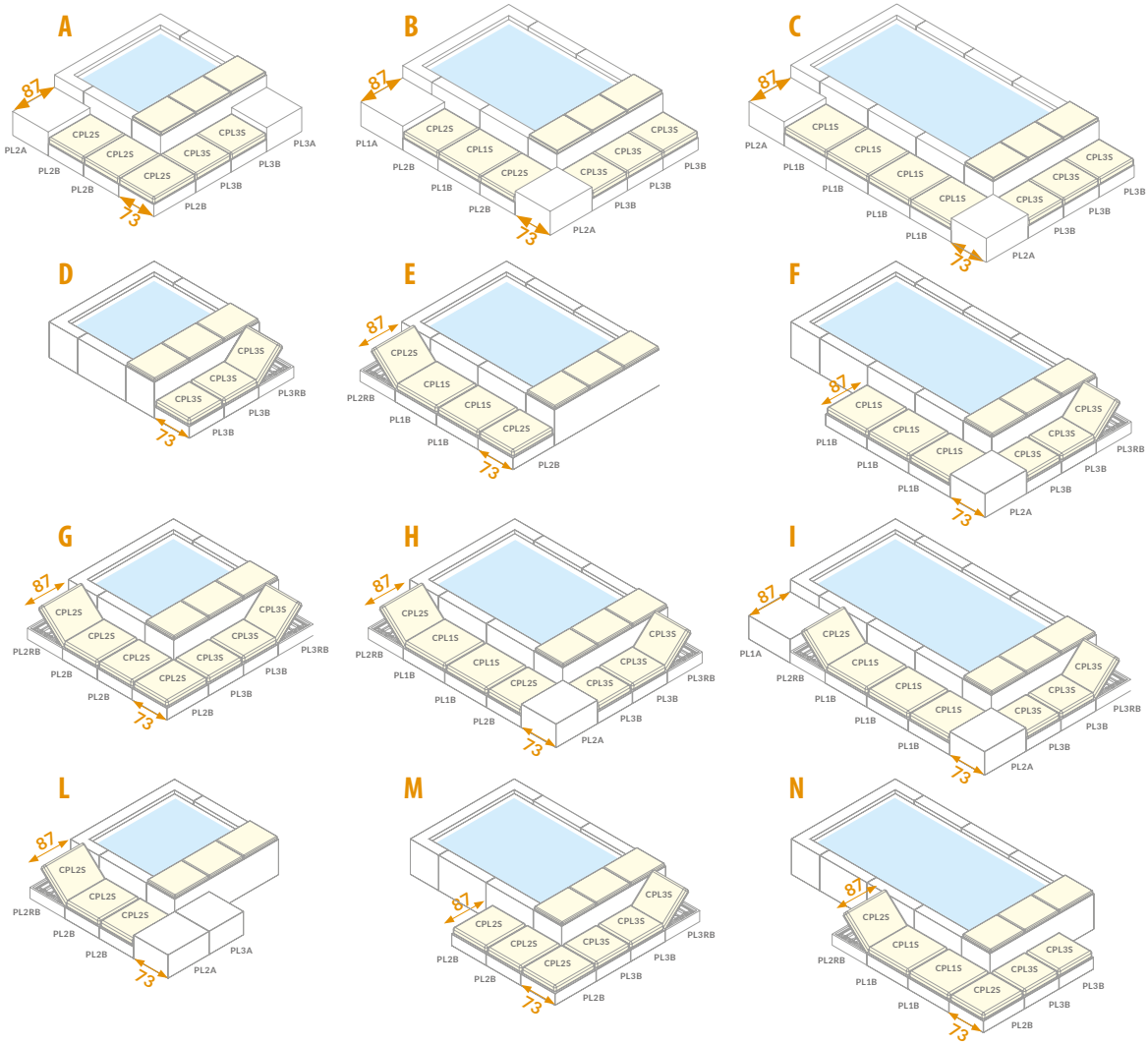

	Description	
A	PL2B (n.3) + PL2A (n.1) + PL3A (n.1) + PL3B (n.2)	CPL2S (n.3) + CPL3S (n.2)
B	PL1A (n.1) + PL2B (n.2) + PL1B (n.1) + PL2A (n.1) + PL3B (n.3)	CPL2S (n.2) + CPL1S (n.1) + CPL3S (n.3)
C	PL1B (n.4) + PL2A (n.2) + PL3B (n.3)	CPL1S (n.4) + CPL3S (n.3)
D	PL3B (n.2) + PL3RB (n.1)	CPL3S (n.3)
E	PL2RB (n.1) + PL2B (n.1) + PL1B (n.2)	CPL2S (n.2) + CPL1S (n.2)
F	PL3B (n.2) + PL3RB (n.1) + PL1B (n.3) + PL2A (n.1)	CPL3S (n.3) + CPL1S (n.3)
G	PL2RB (n.1) + PL2B (n.3) + PL3B (n.2) + PL3RB (n.1)	CPL2S (n.4) + CPL3S (n.3)
H	PL2RB (n.1) + PL2B (n.1) + PL1B (n.2) + PL2A (n.1) + PL3B (n.2) + PL3RB (n.1)	CPL2S (n.2) + CPL1S (n.2) + CPL3S (n.3)
I	PL2RB (n.1) + PL1B (n.3) + PL2A (n.1) + PL3B (n.2) + PL3RB (n.1) + PL1A (n.1)	CPL2S (n.1) + CPL1S (n.3) + CPL3S (n.3)
L	PL2RB (n.1) + PL2B (n.2) + PL2A (n.1) + PL3A (n.1)	CPL2S (n.3)
M	PL2B (n.3) + PL3B (n.2) + PL3RB (n.1)	CPL2S (n.3) + CPL3S (n.3)
N	PL2RB (n.1) + PL1B (n.2) + PL2B (n.1) + PL3B (n.2)	CPL2S (n.2) + CPL1S (n.2) + CPL3S (n.2)

ABOVE GROUND POOLS

PLAYA LIVING - Elements

PLAYA LIVING

Description	Total dimensions (W x L x H) cm	Total gross weight Kg	number of packages	Color model	Laghetto reference	Code
Structure 87X87 43 cm Coffe Playa Living	87x87 h.43	10	1	COFFEE	PL1aCF	**PL1ACF**
Structure 87X87 43 cm White Playa Living	87x87 h.43	10	1	WHITE	PL1aBI	**PL1ABI**
Structure 87X87 43 cm Grey Playa Living	87x87 h.43	10	1	GREY	PL1aGR	**PL1AGR**
Structure 73X87 43 cm Coffe Playa Living	73x87 h.43	9	1	COFFEE	PL2aCF	**PL2ACF**
Structure 73X87 43 cm White Playa Living	73x87 h.43	9	1	WHITE	PL2aBI	**PL2ABI**
Structure 73X87 43 cm Grey Playa Living	73x87 h.43	9	1	GREY	PL2aGR	**PL2AGR**
Structure 73X73 43 cm Coffe Playa Living	73x73 h.43	8	1	COFFEE	PL3aCF	**PL3ACF**
Structure 73X73 43 cm White Playa Living	73x73 h.43	8	1	WHITE	PL3aBI	**PL3ABI**
Structure 73X73 43 cm Grey Playa Living	73x73 h.43	8	1	GREY	PL3aGR	**PL3AGR**
Structure 87X87 21.5 cm Coffe Playa Living	87x87 h.21,5	9	1	COFFEE	PL1bCF	**PL1BCF**
Structure 87X87 21.5 cm White Playa Living	87x87 h.21,5	9	1	WHITE	PL1bBI	**PL1BBI**
Structure 87X87 21.5 cm Grey Playa Living	87x87 h.21,5	9	1	GREY	PL1bGR	**PL1bGR**
Structure 73X87 21.5 cm Coffe Playa Living	73x87 h.21,5	8	1	COFFEE	PL2bCF	**PL2BCF**
Structure 73X87 21.5 cm White Playa Living	73x87 h.21,5	8	1	WHITE	PL2bBI	**PL2BBI**
Structure 73X87 21.5 cm Grey Playa Living	73x87 h.21,5	8	1	GREY	PL2bGR	**PL2BGR**
Structure 73X73 21.5 cm Coffe Playa Living	73x73 h.21,5	7	1	COFFEE	PL3bCF	**PL3BCF**
Structure 73X73 21.5 cm White Playa Living	73x73 h.21,5	7	1	WHITE	PL3bBI	**PL3BBI**
Structure 73X73 21.5 cm Grey Playa Living	73x73 h.21,5	7	1	GREY	PL3bGR	**PL3BGR**
Seat element with reclinable backrest	73x87 h.21.5	8	1	LAGHETTO WHITE	PL2RBB	**PL2RBBI**
Seat element with reclinable backrest	73x87 h.21.5	8	1	GREY	PL2RBG	**PL2RBGR**
Seat element with reclinable backrest	73x87 h.21.5	8	1	COFFEE	PL2RBC	**PL2RBCF**
Seat element with reclinable backrest	73x73 h.21.5	7	1	LAGHETTO WHITE	PL3RBB	**PL3RBBI**
Seat element with reclinable backrest	73x73 h.21.5	7	1	GREY	PL3RBG	**PL3RBGR**
Seat element with reclinable backrest	73x73 h.21.5	7	1	COFFEE	PL3RBC	**PL3RBCF**
Cushion 87X87 12 cm Natural Playa Living	87x87 h.12	3	1	NATURAL	CPL1SN	**CPL1SN**
Cushion 87X87 12 cm Water Playa Living	87x87 h.12	3	1	WATER	CPL1SW	**CPL1SW**
Cushion 87X87 12 cm Brown Playa Living	87x87 h.12	3	1	BROWN	CPL1SB	**CPL1SB**
Cushion 87X87 12 cm Grey Playa Living	87x87 h.12	3	1	GREY	CPL1SG	**CPL1SG**
Cushion 73X87 12 cm Natural Playa Living	73x87 h.12	3	1	NATURAL	CPL2SN	**CPL2SN**
Cushion 73X87 12 cm Water Playa Living	73x87 h.12	3	1	WATER	CPL2SW	**CPL2SW**
Cushion 73X87 12 cm Brown Playa Living	73x87 h.12	3	1	BROWN	CPL2SB	**CPL2SB**
Cushion 73X87 12 cm Grey Playa Living	73x87 h.12	3	1	GREY	CPL2SG	**CPL2SG**
Cushion 73X73 12 cm Natural Playa Living	73x73 h.12	2	1	NATURAL	CPL3SN	**CPL3SN**
Cushion 73X73 12 cm Water Playa Living	73x73 h.12	2	1	WATER	CPL3SW	**CPL3SW**
Cushion 73X73 12 cm Brown Playa Living	73x73 h.12	2	1	BROWN	CPL3SB	**CPL3SB**
Cushion 73X73 12 cm Grey Playa Living	73x73 h.12	2	1	GREY	CPL3SG	**CPL3SG**

Dolce Vita

A pool that looks good in any environment and that you can build even where a traditional inground swimming pool can't be placed.

Dolcevita is the most fashionable and desirable pool for those people who search something to stand out and who setup a space dedicated to the pleasure and the family relaxation.



DIVA - RATTAN

MOD.	WATER SIZE (m)	TOTAL ENCUMBRANCE (m)	WATER HEIGHT (m)	TOTAL HEIGHT (m)	VOLUME (m^3)
24	2 x 4	2.4 x 4.4	1.2	1.3	9.6
25	2 x 5	2.4 x 5.4	1.2	1.3	12
35	3 x 5	3.4 x 5.4	1.2	1.3	18
36	3 x 6	3.4 x 6.4	1.2	1.3	21.6
37	3 x 7	3.4 x 7.4	1.2	1.3	25.2
48	4 x 8	4.4 x 8.4	1.2	1.3	38.4
49	4 x 9	4.4 x 9.4	1.2	1.3	43.2
510	5 x 10	5.4 x 10.4	1.2	1.3	60

Special sizes are available on demand.

DIVA LTI - DIVINA (only in size 35, 36, 37, 48)

MOD.	WATER SIZE (m)	TOTAL ENCUMBRANCE (m)	WATER HEIGHT (m)	TOTAL HEIGHT (m)	VOLUME (m^3)
254	2.5 x 4	2.9 x 5.1	1.2	1.3	12
255	2.5 x 5	2.9 x 6.1	1.2	1.3	15
35	3 x 5	3.4 x 6.1	1.2	1.3	18
36	3 x 6	3.4 x 7.1	1.2	1.3	21.6
37	3 x 7	3.4 x 8.1	1.2	1.3	25.2
48	4 x 8	4.4 x 9.1	1.2	1.3	38.4
49	4 x 9	4.4 x 10.10	1.2	1.3	43.2

Available in 2.5 - 3 - 4 m. width only.

DIVA WITH AUTOMATIC POOL COVER

MOD.	WATER SIZE (m)	TOTAL ENCUMBRANCE (m)	WATER HEIGHT (m)	TOTAL HEIGHT (m)	VOLUME (m^3)
255	2.5 x 5	2.8 x 6.05	1.2	1.3	12
35	3 x 5	3.3 x 6.05	1.2	1.3	18
36	3 x 6	3.3 x 7.05	1.2	1.3	21.6

Dolce Vita

Dolcevita renews the world of above-ground pools thanks to a sound technology Laghetto which is on the market for over 40 years, and its innovative and graceful design.

Dolcevita can adapt to the needs of a changing family, allowing thoughts, repositioning, moving, resale.

Its versatility allows easy and quick installation even in areas with seasonal permits only.

Dolcevita provides a recirculating and filtration system which enables the highest quality and hygiene of the water purity.

Dolcevita comes up in two different models: Diva and Rattan, with high quality materials that ensure long time use.

Structure

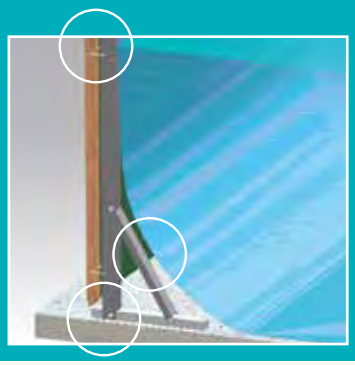

Pool liner



Plastic Wood Coping (RATTAN line)



TRELLIS PILLARS
Powder coated hot galvanized steel with stainless steel piece of support.

TRELLIS SPARS
Powder coated hot galvanized steel.

NUTS AND BOLTS
Stainless steel with anti-grip nuts.



LINER
Made of PVC coated polyester fabric membrane it is incredibly strong (it easily passes DIN 53354 test up to traction of 430 Kg on 5 cm) , it is treated with a special coating that prevents dirt from attaching to exposed areas and provides protection against damage caused by UV light to be very durable.



DOLCEVITA TOPRAIL FINISH
Rattan toprail finish is a dedicated composite wood made for us exclusively by Plastic Wood. Diva toprail finish is integrated in the design of the special wicker panel.

Warranty on the pool (liner + structural parts) is 5 years, warranty on all the other accessories included in the kit is 2 years.



Dolce Vita

Diva panel



DOLCEVITA PANELS

Dolcevita 2020 finish is available in 2 different panels options: wicker with wicker corner pieces for the Rattan line, or the exclusive solution created for the DIVA line, where the Viro wicker panels also cover the top rail of the structure.

Dolcevita Diva ladder



DOLCEVITA LADDERS

The Dolcevita finishes have two different kinds of ladder to access to the pool.
Rattan kit include a ladder with the liftable external part to avoid the access to the kids when the pool is unattended or unused.
DIVA kit has a dedicated luxury grade ladder.

Laghetto Led Spot



LED SPOT LIGHTS

Every Dolcevita, no matter what finish, comes standard with Laghetto Led spot lights.
These led spot lights have a peerless luminous efficiency, very low power consumption (less than 8 W) and an unmatched durability.

Vacuum cleaner



VACUUM CLEANER

Every Dolcevita Pool kit also include a vacuum cleaner (pipe length varies according to the pool size and the number of skimmers).

AstralPool sand filters



SAND FILTRATION SYSTEMS

The technical partnership between Piscine Laghetto and AstralPool introduces the 6, 10 and 15 mc/h sand filters in all swimming pool kits.

Winter cover

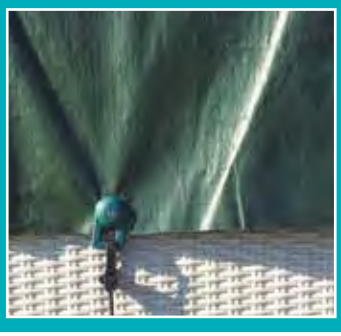

WINTER COVER (optional)

Winter cover LSP complete with elastic cords and fixations.

Summer cover



SUMMER COVER (optional)

Isothermic summer cover for Dolcevita.

ABOVE GROUND POOLS

DOLCEVITA RATTAN model

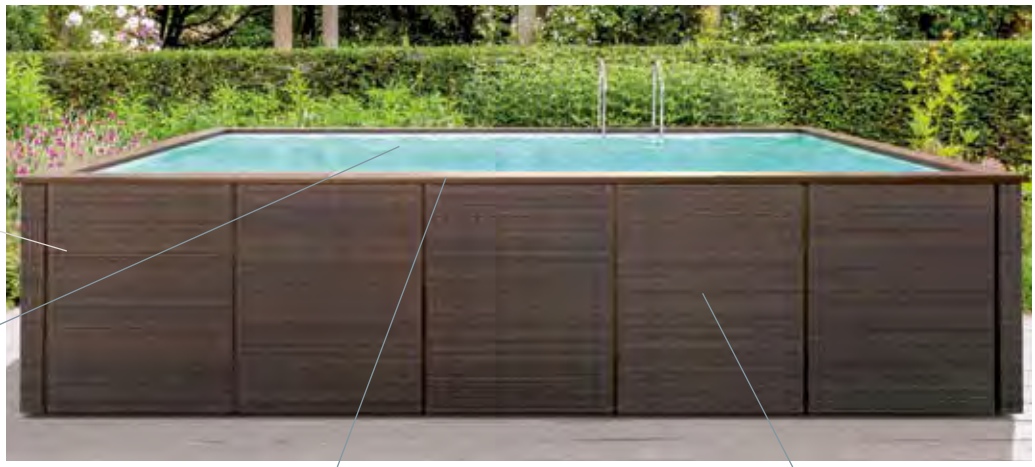

1
Internal structure

2
Pool liner



5
Dolcevita Composite Wood Top Edge

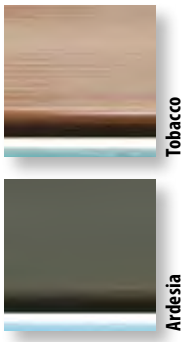

9
Exterior panels: handwoven fiber

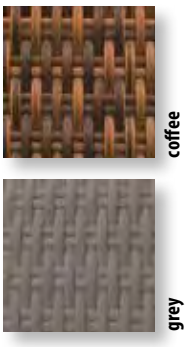

3
Filtration System (as in the diagram) attention: the filtration system doesn't include the electrical panel.

AstralPool sand filters

4
Hight brightness LED spotlight:
1 Spot until model 36,
2 Spots from model 37 until model 510
(standard placement - see page 375).

6
Vacuum cleaner system.

7
Wooden panel supports and wicker corner pieces.

8
Dolcevita safety ladder.





POOL KIT
=
1 + 2 + 3 + 4 + 5 + 6 + 7 + 8 + 9

WICKER PANELS AND CORNER PIECES AVAILABLE IN TWO COLORS: COFFEE OR GREY, POOL LINER (COLOR CHOICE: LIGHT BLUE, SAND OR WHITE)

x =
BICF (white liner and coffee panels)
BIGR (white liner and grey panels)
BECF (beige liner and coffee panels)
BEGR (beige liner and grey panels)
AZCF (light blue liner and coffee panels)
AZGR (light blue liner and grey panels)

ABOVE GROUND POOLS

DOLCEVITA RATTAN model·

Dolce Vita

Laghetto model	Description	Total dimensions (W x L x H) cm	Water dimensions (W x L x H) cm	Water volume Litres	Packaging dimensions	Total gross weight Kg	Laghetto reference	Code
RATTAN 24	Swimming pool 2 x 4 m DOLCEVITA Rattan with sand filter 10 m³ / h, 1 LED spotlight	240x440	200x400x120	9,600	1 pallet: 100 x 130 x 240 h	357	KITDVC24xS10R	**2410X**
RATTAN 25	Swimming pool 2 x 5 m DOLCEVITA Rattan with sand filter 10 m³ / h, 1 LED spotlight	240x540	200x500x120	12,000	1 pallet: 100 x 130 x 240 h	386	KITDVC25xS10R	**2510X**
RATTAN 35	Swimming pool 3 x 5 m DOLCEVITA Rattan with sand filter 10 m³ / h, 1 LED spotlight	340x540	300x500x120	18,000	1 pallet: 100 x 130 x 240 h	432	KITDVC35xS10R	**3510X**
RATTAN 36	Swimming pool 3 x 6 m DOLCEVITA Rattan with sand filter 10 m³ / h, 1 LED spotlight	340x640	300x600x120	21,600	2 pallets: 100 x 130 x 200 h 100 x 120 x 110 h	565	KITDVC36xS10R	**3610X**
RATTAN 37	Swimming pool 3 x 7 m DOLCEVITA Rattan with sand filter 10 m³ / h, 2 LED spotlights	340x740	300x700x120	25,200	2 pallets: 100 x 130 x 240 h 100 x 120 x 135 h	575	KITDVC37xS10R	**3710X**
RATTAN 48	Swimming pool 4 x 8 m DOLCEVITA Rattan with sand filter 10 m³ / h, 2 LED spotlights	440x840	400x800x120	38,400	2 pallets: 100 x 130 x 240 h 100 x 120 x 140 h	645	KITDVC48xS10R	**4810X**
RATTAN 49	Swimming pool 4 x 8 m DOLCEVITA Rattan with sand filter 15 m³ / h, 2 LED spotlights	440x940	400x900x120	43,200	2 pallets: 100 x 130 x 240 h 100 x 120 x 200 h	720	KITDVC49xS15R	**4915X**
RATTAN 510	Swimming pool 5 x 10 m DOLCEVITA Rattan with sand filter 15 m³ / h, 2 LED spotlights	540x1040	500x1000x120	60,000	2 pallets: 100 x 130 x 240 h 100 x 120 x 210 h	860	KITDVC510xS15R	**51015X**

Substitute **X** for the following 4 letters, according to the desired color combination:

BICF white liner and coffee panels
BIGR white liner and grey panels
BECF beige liner and coffee panels
BEGR beige liner and grey panels
AZCF light blue liner and coffee panels
AZGR light blue liner and grey panels

ABOVE GROUND POOLS

DOLCEVITA DIVA model



1
Internal structure

2
Pool liner



5
Panels with integrated top edge



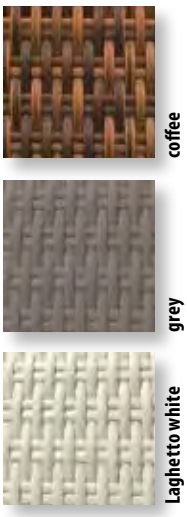

3
Filtration System (as in the diagram) attention: the filtration system doesn't include the electrical panel.

AstralPool sand filters

4
Hight brightness LED spotlight:
1 Spot until model 36,
2 Spots from model 37 until model 510
(standard placement - see page 375).

6
Vacuum cleaner system.

7
Wooden & steel panels-supports.

8
Luxury ladder specific for Diva version.





POOL KIT
=
1 + 2 + 3 + 4 + 5 +
6 + 7 + 8

ATTENTION: ONLY AVAILABLE AS COMPLETE KIT - HALF-METER MEASURES ARE AVAILABLE IN ONE LENGTH ONLY (ES: 3 X 7,5 M.)
(PRICE ON REQUEST)

PANELS AND TOP EDGE INTEGRATED IN ONE PIECE MADE OF WICKER. AVAILABLE IN THREE COLORS: COFFEE, GREY OR LAGHETTO WHITE.
POOL LINER (COLOR CHOICE: LIGHT BLUE, SAND OR WHITE)

x =

BICF (white liner and coffee panels)
BIGR (white liner and grey panels)
BIBI (white liner and white panels)
BECF (beige liner and coffee panels)
BEGR (beige liner and grey panels)
BEBI (beige liner and white panels)
AZCF (light blue liner and coffee panels)
AZGR (light blue liner and grey panels)
AZBI (light blue liner and white panels)

ABOVE GROUND POOLS

DOLCEVITA DIVA model

Laghetto model	Description	Total dimensions (W x L x H) cm	Water dimensions (W x L x H) cm	Water volume Litres	Packaging dimensions cm	Total gross weight Kg	Laghetto reference	Code
DIVA 24	Swimming pool 2 x 4 m DOLCEVITA Diva with sand filter 10 m³ / h, 1 LED spotlight	240x440	200x400x120	9,600	2 pallets: 100 x 130 x 240 h 100 x 120 x 120 h	332	KITDVC24XS10D	**D24XS10**
DIVA 25	Swimming pool 2 x 5 m DOLCEVITA Diva with sand filter 10 m³ / h, 1 LED spotlight	240x540	200x500x120	12,000	2 pallets: 100 x 130 x 240 h 100 x 120 x 120 h	356	KITDVC25XS10D	**D25XS10**
DIVA 35	Swimming pool 3 x 5 m DOLCEVITA Diva with sand filter 10 m³ / h, 1 LED spotlight	340x540	300x500x120	18,000	2 pallets: 100 x 130 x 240 h 100 x 120 x 180 h	389	KITDVC35XS10D	**D35XS10**
DIVA 36	Swimming pool 3 x 6 m DOLCEVITA Diva with sand filter 10 m³ / h, 1 LED spotlight	340x640	300x600x120	21,600	2 pallets: 100 x 130 x 240 h 100 x 110 x 180 h	435	KITDVC36XS10D	**D36XS10**
DIVA 37	Swimming pool 3 x 7 m DOLCEVITA Diva with sand filter 10 m³ / h, 2 LED spotlights	340x740	300x700x120	25,200	2 pallets: 100 x 130 x 240 h 100 x 110 x 190 h	472	KITDVC37XS10D	**D37XS10**
DIVA 48	Swimming pool 4 x 8 m DOLCEVITA Diva with sand filter 10 m³ / h, 2 LED spotlights	440x840	400x800x120	38,400	2 pallets: 100 x 130 x 250 h 100 x 120 x 190 h	636	KITDVC48XS10D	**D48XS10**
DIVA 49	Swimming pool 4 x 9 m DOLCEVITA Diva with sand filter 15 m³ / h, 2 LED spotlights	440x940	400x900x120	43,200	2 pallets: 100 x 130 x 240 h 100 x 120 x 220 h	680	KITDVC49XS15D	**D49XS15**
DIVA 510	Swimming pool 5 x 10 m DOLCEVITA Diva with sand filter 15 m³ / h, 2 LED spotlights	540x1040	500x1000x120	60,000	3 pallets: 100 x 130 x 170 h 100 x 120 x 170 h 100 x 120 x 220 h	750	KITDVC510XS15D	**D510XS15**

Substitute **X** for the following 4 letters, according to the desired color combination:

BICF white liner and coffee panels
BIGR white liner and grey panels
BIBI white liner and white panels
BECF beige liner and coffee panels
BEGR beige liner and grey panels
BEBI beige liner and white panels
AZCF light blue liner and coffee panels
AZGR light blue liner and grey panels
AZBI light blue liner and white panels

ABOVE GROUND POOLS

DOLCEVITA DIVA LTI model



1
Internal structure

2
Pool liner



5
Panels with integrated top edge



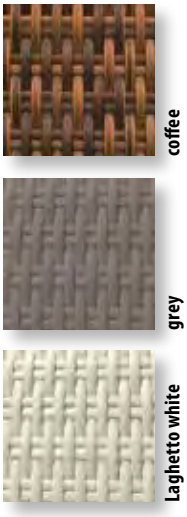

3
Filtration System (as in the diagram) attention: the filtration system doesn't include the electrical panel.

AstralPool sand filters

4
Hight brightness LED spotlight:
1 Spot until model 36,
2 Spots from model 37 until model 510
(standard placement - see page 375) .

6
Vacuum cleaner system.

7
Wooden & steel panels-supports.

8
Luxury ladder specific for Diva version.





POOL KIT
=
1 + 2 + 3 + 4 + 5 +
6 + 7 + 8

ATTENTION: ONLY AVAILABLE AS COMPLETE KIT AND ONLY IN 2,5 – 3 – 4 M WIDTH.

CAUTION: THE EQUIPMENT ROOM IS NOT LOAD-BEARING. NO PERSONS ALLOWED ON IT.

PANELS AND TOP EDGE INTEGRATED IN ONE PIECE MADE OF WICKER. AVAILABLE IN THREE COLORS: COFFEE, GREY OR LAGHETTO WHITE. POOL LINER (COLOR CHOICE: LIGHT BLUE, SAND OR WHITE)

x =

BICF (white liner and coffee panels)
BIGR (white liner and grey panels)
BIBI (white liner and white panels)
BECF (beige liner and coffee panels)
BEGR (beige liner and grey panels)
BEBI (beige liner and white panels)
AZCF (light blue liner and coffee panels)
AZGR (light blue liner and grey panels)
AZBI (light blue liner and white panels)

ABOVE GROUND POOLS

DOLCEVITA DIVA LTI model

Laghetto model	Description	Total dimensions (W x L x H) cm	Water dimensions (W x L x H) cm	Water volume Litres	Packaging Dimensions	Total gross weight Kg	Laghetto reference	Code
LTI 254	Swimming pool 2.5 x 4 m DOLCEVITA Diva LTI with sand filter 10 m³ / h, 1 LED spotlight	290x510	250x400x120	12,000	2 pallets: 100 x 130 x 240 h 100 x 120 x 130 h	355	KITDVC254xS10DG	**D24XS10L**
LTI 255	Swimming pool 2.5 x 5 m DOLCEVITA Diva LTI with sand filter 10 m³ / h, 1 LED spotlight	290x610	250x500x120	15,000	2 pallets: 100 x 130 x 240 h 100 x 120 x 150 h	375	KITDVC255xS10DG	**D25XS10L**
LTI 35	Swimming pool 3 x 5 m DOLCEVITA Diva LTI with sand filter 10 m³ / h, 1 LED spotlight	340x610	300x500x120	18,000	2 pallets: 100 x 130 x 240 h 100 x 120 x 200 h	410	KITDVC35xS10DG	**D35XS10L**
LTI 36	Swimming pool 3 x 6 m DOLCEVITA Diva LTI with sand filter 10 m³ / h, 1 LED spotlight	340x710	300x600x120	21,600	2 pallets: 100 x 130 x 240 h 100 x 120 x 200 h	455	KITDVC36xS10DG	**D36XS10L**
LTI 37	Swimming pool 3 x 7 m DOLCEVITA Diva LTI with sand filter 10 m³ / h, 2 LED spotlights	340x810	300x700x120	25,200	2 pallets: 100 x 130 x 240 h 100 x 120 x 210 h	492	KITDVC37xS10DG	**D37XS10L**
LTI 48	Swimming pool 4 x 8 m DOLCEVITA Diva LTI with sand filter 10 m³ / h, 2 LED spotlights	440x910	400x800x120	38,400	2 pallets: 100 x 130 x 250 h 100 x 120 x 230 h	675	KITDVC48xS10DG	**D48XS10L**
LTI 49	Swimming pool 4 x 9 m DOLCEVITA Diva LTI with sand filter 15 m³ / h, 2 LED spotlights	440x1010	400x900x120	43,200	2 pallets: 100 x 150 x 240 h 100 x 120 x 240 h	700	KITDVC49xS15DG	**D49XS15L**

Substitute **X** for the following 4 letters, according to the desired color combination:

BICF white liner and coffee panels
BIGR white liner and grey panels
BIBI white liner and white panels
BECF beige liner and coffee panels
BEGR beige liner and grey panels
BEBI beige liner and white panels
AZCF light blue liner and coffee panels
AZGR light blue liner and grey panels
AZBI light blue liner and white panels

ABOVE GROUND POOLS

DOLCEVITA DIVA model with automatic pool cover



1
Internal structure

2
Pool liner



7
Panels with integrated top edge.

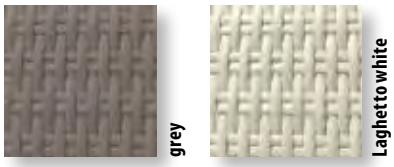



3
6 m³/h sand filtration system.
attention: the filtration system doesn't include the electrical panel.

AstralPool sand filters

4
1 LED spotlight hight brightness.



5
Vacuum cleaner system.

6
Steel panel-supports.

8
Two-part ladder for automatic coverage.



9
Decorative water blade with push-button actuator.



10
Automatic coverage with key-operated device.





ABOVE GROUND POOLS

DOLCEVITA DIVA model with automatic pool cover

Laghetto model	Description	Total dimensions (W x L x H) cm	Water dimensions (W x L x H) cm	Water volume Litres	Packaging dimensions cm	Total gross weight Kg	Laghetto reference	Code
DIVA 255	Laghetto white 6 m³ sand filtering system pool cover + water cascade	330x605	300x500	18,000	4 pallets: 350x60x80 (1) 100x130x240 (1) 100x120x130 (1) 130x140x180 (1)	700	KITDVC255xS6DT	**DVC35XS6DT**
DIVA 35	Laghetto white 6 m³ sand filtering system pool cover + water cascade	330x605	300x500	18,000	4 pallets: 350x60x80 (1) 100x130x240 (1) 100x120x130 (1) 130x140x180 (1)	700	KITDVC35xS6DT	**DVC35XS6DT**
DIVA 36	Laghetto white 6 m³ sand filtering system pool cover + water cascade	330x705	300x600	21,600	4 pallets: 350x60x80 (1) 100x130x240 (1) 100x120x150 (1) 130x140x200 (1)	750	KITDVC36xS6DT	**DVC36XS6DT**

Substitute **X** for the following 4 letters, according to the desired color combination:

BIGR white liner and grey panels
BIBI white liner and white panels

ABOVE GROUND POOLS

DOLCEVITA YACHT model

4
Internal structure

8
Plexiglass parapets

9
Pool liner





1
Yacht ladder & platform in composite wood + Inox ladder







5
Panels and top edge integrated in one piece panel made of wicker. Including 2 opening panels on both sides of the platform.

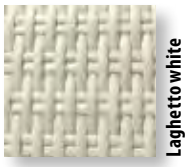

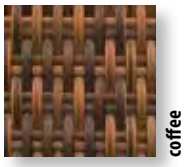

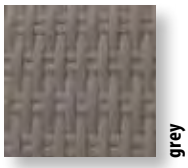

2
Filtration System (as in the diagram) attention: the filtration system doesn't include the electrical panel.

AstralPool sand filters

3
Boat shower



6
Hight brightness LED spotlight:
1 Spot until model 36,
2 Spots from model 37 until model 510
(standard placement - see page 375).



7
Vacuum cleaner system.



POOL KIT
=
1 + 2 + 3 + 4 + 5 + 6 + 7 + 8 + 9

ATTENTION: ONLY AVAILABLE AS COMPLETE KIT AND ONLY IN 2 - 2,5 - 3 M WIDTH.

PANELS AND TOP EDGE INTEGRATED IN ONE PIECE MADE OF WICKER. AVAILABLE IN THREE COLORS: COFFEE, GREY OR LAGHETTO WHITE. POOL LINER (COLOR WHITE)

x =
BIGR (white liner and grey panels)
BIBI (white liner and Laghetto white panels)
BICF (white liner and coffee panels)

ABOVE GROUND POOLS

DOLCEVITA YACHT model

Laghetto model	Description	Total dimensions (W x L x H) cm	Water dimensions (W x L x H) cm	Water volume Litres	Laghetto reference	Code
24	Swimming pool 2 x 4 m DOLCEVITA Yacht with sand filter 6 m³ / h, 1 LED spotlight	240x635	200x400x120	9,600	KITDVC24xS6Y	**D24xS6Y**
25	Swimming pool 2 x 5 m DOLCEVITA Yacht with sand filter 6 m³ / h, 1 LED spotlight	240x735	200x500x120	12,000	KITDVC25xS6Y	**D25xS6Y**
254	Swimming pool 2.5 x 4 m DOLCEVITA Yacht with sand filter 6 m³ / h, 1 LED spotlight	290x635	250x400x120	12,000	KITDVC254xS6Y	**D254xS6Y**
255	Swimming pool 2.5 x 5 m DOLCEVITA Yacht with sand filter 6 m³ / h, 1 LED spotlight	290x735	250x500x120	15,000	KITDVC255xS6Y	**D255xS6Y**
256	Swimming pool 2.5 x 6 m DOLCEVITA Yacht with sand filter 6 m³ / h, 1 LED spotlight	290x835	250x600x120	18,000	KITDVC256xS6Y	**D256xS6Y**
35	Swimming pool 3 x 5 m DOLCEVITA Yacht with sand filter 6 m³ / h, 1 LED spotlight	340x735	300x500x120	18,000	KITDVC35xS6Y	**D35xS6Y**
35	Swimming pool 3 x 5 m DOLCEVITA Yacht with sand filter 10 m³ / h, 1 LED spotlight	340x735	300x500x120	18,000	KITDVC35xS10Y	**D35xS10Y**
36	Swimming pool 3 x 6 m DOLCEVITA Yacht with sand filter 6 m³ / h, 1 LED spotlight	340x835	300x600x120	21,600	KITDVC36xS6Y	**D36xS6Y**
36	Swimming pool 3 x 6 m DOLCEVITA Yacht with sand filter 10 m³ / h, 1 LED spotlight	340x835	300x600x120	21,600	KITDVC36xS10Y	**D36xS10Y**
37	Swimming pool 3 x 7 m DOLCEVITA Yacht with sand filter 10 m³ / h, 2 LED spotlights	340x935	300x700x120	25,200	KITDVC37xS10Y	**D37xS10Y**
38	Swimming pool 3 x 8 m DOLCEVITA Yacht with sand filter 10 m³ / h, 2 LED spotlights	340x1035	300x800x120	28,800	KITDVC38xS10Y	**D38xS10Y**

Substitute **X** for the 4 following letters, according to the desired color combination:

BIGR white liner and grey panels
BIBI white liner and white panels






Frassino


Ardesia


Tabacco

Description	Total dimensions (W x L x H) cm	Laghetto reference	Code
Optional step for easy access - Frassino color	-	DVYGRACOMB	**71410**
Optional step for easy access - Ardesia color	-	DVYGRACOMG	**71411**
Optional step for easy access - Tabacco color	-	DVYGRACOMM	**-**
Nautical sky sun bed. Other sizes on request.	200 x 56 x 6	DVYVELA3	**71412**

ABOVE GROUND POOLS

DOLCEVITA DIVINA model

New

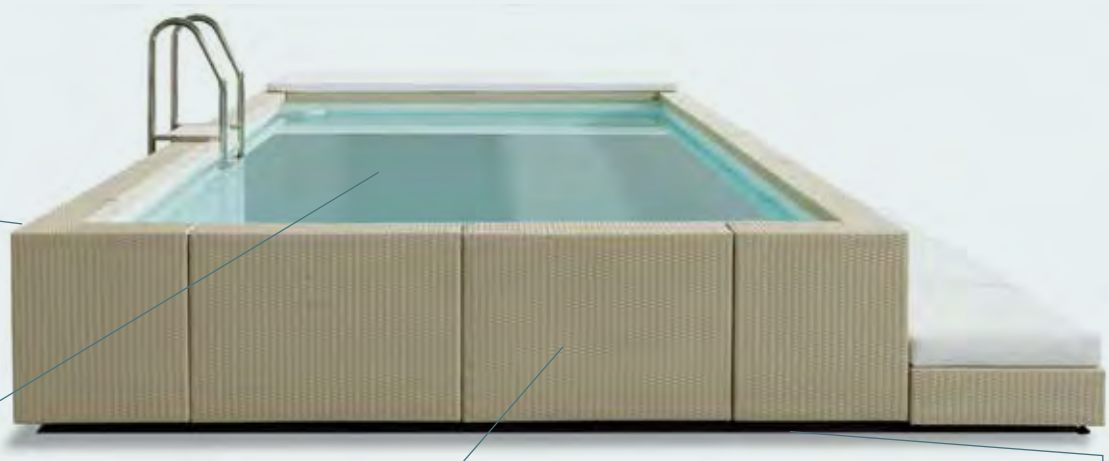

1
Internal structure

2
Pool liner


white


beige


light blue

5
Panels with integrated top edge.




grey


Laghetto white

9
Ground containment panels.



3
Filtration System (as in the diagram) attention: the filtration system doesn't include the electrical panel.

AstralPool sand filters

4
Hight brightness LED spotlight:
1 Spot until model 36,
2 Spots from model 37

6
Vacuum cleaner system.

7
FIXING AND ALIGNMENT KIT.





8
Luxury specific for Divina version.



POOL KIT
=
1 + 2 + 3 + 4 + 5 +
6 + 7 + 8 + 9

PANELS AND TOP EDGE INTEGRATED IN ONE PIECE MADE OF WICKER. AVAILABLE IN TWO COLORS: GREY OR LAGHETTO WHITE.
POOL LINER (COLOR CHOICE: LIGHT BLUE, SAND OR WHITE)

x =
BIGR (white liner and grey panels)
BIBI (white liner and white panels)
BEGR (beige liner and grey panels)
BEBI (beige liner and white panels)
AZGR (light blue liner and grey panels)
AZBI (light blue liner and white panels)

ABOVE GROUND POOLS

DOLCEVITA DIVINA model

New

Dolce Vita

Laghetto model	Description	Laghetto reference	Code
3.00 x 5.00 h.1.20 m (3.40 x 6.10)	1 skimmer 10 m³ h sand filtering system	KITDVC35xS10DSCA	KITDVC35xS10DSCA
3.00 x 6.00 h.1.20 m (3.40 x 7.10)	1 skimmer 10 m³ h sand filtering system	KITDVC36xS10DSCA	KITDVC36xS10DSCA
3.00 x 7.00 h.1.20 m (3.40 x 8.10)	1 skimmer 10 m³ h sand filtering system	KITDVC37xS10DSCA	KITDVC37xS10DSCA
4.00 x 8.00 h.1.20 m (4.40 x 9.10)	1 skimmer 10 m³ h sand filtering system	KITDVC48xS10DSCA	KITDVC48xS10DSCA

Substitute **X** for the following 4 letters, according to the desired color combination:

BIGR white liner and grey panels
BIBI white liner and white panels
BEGR beige liner and grey panels
BEBI beige liner and white panels
AZGR light blue liner and grey panels
AZBI light blue liner and white panels

ABOVE GROUND POOLS

DOLCEVITA NAKED model



1
Internal structure

2
Pool liner


white


beige

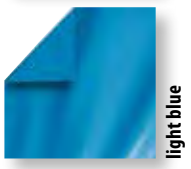
light blue

5
Dolcevita Composite Wood Top Edge


Tobacco

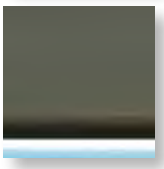
Ardesia

3
Filtration System (as in the diagram)
attention: the filtration system doesn't include the electrical panel.

AstralPool sand filters

4
Hight brightness LED spotlight:
1 Spot until model 36,
2 Spots from model 37 until model 510
(standard placement - see page 375).

6
Vacuum cleaner system.

7
Wooden panel-supports.

8
Dolcevita safety ladder.





POOL KIT
=
1 + 2 + 3 + 4 + 5 +
6 + 7 + 8 + 9

THIS DOLCEVITA VERSION DOES NOT INCLUDE PANELS.

POOL LINER - COLOR CHOICE.

x =
AZ Dark blue
BE Beige
BI White

ABOVE GROUND POOLS

DOLCEVITA NAKED model

Laghetto model	Description	Total dimensions (W x L x H) cm	Water dimensions (W x L x H) cm	Water volume Litres	Packaging Dimensions	Total gross weight Kg	Laghetto reference	Code
DV NAKED 24	Swimming pool 2 x 4 m DOLCEVITA Naked with sand filter 10 m³ / h, 1 LED spotlight	240x440	200x400x120	9,600	1 pallet: 100x130x240	357	KITDVC24xS10N	D24xS10Nz
DV NAKED 25	Swimming pool 2 x 5 m DOLCEVITA Naked with sand filter 10 m³ / h, 1 LED spotlight	240x540	200x500x120	12,000	1 pallet: 100x130x240	386	KITDVC25xS10N	D25xS10Nz
DV NAKED 35	Swimming pool 3 x 5 m DOLCEVITA Naked with sand filter 10 m³ / h, 1 LED spotlight	340x540	300x500x120	18,000	1 pallet: 100x130x240	432	KITDVC35xS10N	D35xS10Nz
DV NAKED 36	Swimming pool 3 x 6 m DOLCEVITA Naked with sand filter 10 m³ / h, 1 LED spotlight	340x640	300x600x120	21,600	1 pallet: 100x130x240	565	KITDVC36xS10N	D36xS10Nz
DV NAKED 37	Swimming pool 3 x 7 m DOLCEVITA Naked with sand filter 10 m³ / h, 2 LED spotlights	340x740	300x700x120	25,200	1 pallet: 100x130x240	575	KITDVC37xS10N	D37xS10Nz
DV NAKED 48	Swimming pool 4 x 8 m DOLCEVITA Naked with sand filter 10 m³ / h, 2 LED spotlights	440x840	400x800x120	38,400	1 pallet: 100x130x240	645	KITDVC48xS10N	D48xS10Nz
DV NAKED 49	Swimming pool 4 x 9 m DOLCEVITA Naked with sand filter 15 m³ / h, 2 LED spotlights	440x940	400x900x120	43,200	2 pallets: 100x130x240 100x120x130	720	KITDVC49xS15N	D49xS10Nz
DV NAKED 510	Swimming pool 5 x 10 m DOLCEVITA Naked with sand filter 15 m³ / h, 2 LED spotlights	540x1040	500x1000x120	60,000	2 pallets: 100x130x240 100x120x130	860	KITDVC510xS15N	D510xS10Nz

STRUCTURE AND POOL LINER

Substitute **x** for the 2 following letters, according to the desired color combination:

AZ Light blue
BE Sand
BI White

COMPOSITE WOOD TOP EDGE ELEMENT

Substitute **z** for the following letters, according to the desired color combination:

T Tobacco
G Grey

ABOVE GROUND POOLS

DOLCEVITA accessories - Covers

Dolce Vita

SUMMER COVER




WINTER COVER




Description	Total dimensions (W x L x H) cm	Laghetto reference	Code
Winter protection cover with elastic tensioners and DOLCEVITA 2x4 fixings	320 x 520	CODVC24	**69644**
Winter protection cover with elastic tensioners and DOLCEVITA 2x5 fixings	320 x 620	CODVC25	**69645**
Winter protection cover with elastic tensioners and DOLCEVITA 3x5 fixings	420 x 620	CODVC35	**68001**
Winter protection cover with elastic tensioners and DOLCEVITA 3x6 fixings	420 x 720	CODVC36	**69646**
Winter protection cover with elastic tensioners and DOLCEVITA 3x7 fixings	420 x 820	CODVC37	**68002**
Winter protection cover with elastic tensioners and DOLCEVITA 4x8 fixings	520 X 920	CODVC48	**68003**
Winter protection cover with elastic tensioners and DOLCEVITA 4x9 fixings	520 X 1020	CODVC49	**69647**
Winter protection cover with elastic tensioners and DOLCEVITA 5x10 fixings	620 X 1120	CODVC510	**69648**
Winter protection cover DOLCEVITA DIVA LTI 2.5x4	370 X 600	CODVC254DG	**71111**
Winter protection cover DOLCEVITA DIVA LTI 2.5x5	370 X 700	CODVC255DG	**71250**
Winter protection cover DOLCEVITA DIVA LTI 3x5	420 X 700	CODVC35DG	**71251**
Winter protection cover DOLCEVITA DIVA LTI 3x6	420 X 800	CODVC36DG	**71252**
Winter protection cover DOLCEVITA DIVA LTI 3x7	420 X 900	CODVC37DG	**71249**
Winter protection cover DOLCEVITA DIVA LTI 4x8	520 X 1000	CODVC48DG	**71253**
Winter protection cover DOLCEVITA DIVA LTI 4x9	520 X 1100	CODVC49DG	**71254**
Floating isothermal cover DOLCEVITA 2x4 - All models	200 X 400	COGIDV24	**71450**
Floating isothermal cover DOLCEVITA 2x5 - All models	200 X 500	COGIDV25	**71449**
Floating isothermal cover DOLCEVITA 2.5x4 - All models	250 X 400	COGIDV254	**71565**
Floating isothermal cover DOLCEVITA 2.5x5 - All models	250 X 500	COGIDV255	**71566**
Floating isothermal cover DOLCEVITA 3x5 - All models	300 X 500	COGIDV35	**71451**
Floating isothermal cover DOLCEVITA 3x6 - All models	300 X 600	COGIDV36	**71452**
Floating isothermal cover DOLCEVITA 3x7 - All models	300 X 700	COGIDV37	**71453**
Floating isothermal cover DOLCEVITA 4x8 - All models	400 X 800	COGIDV48	**71454**
Floating isothermal cover DOLCEVITA 4x9 - All models	400 X 900	COGIDV49	**71455**
Floating isothermal cover DOLCEVITA 5x10 - All models	500 X 1000	COGIDV510	**71456**

ABOVE GROUND POOLS

DOLCEVITA Swim system

	Description	Laghetto reference	Code
3 MT	SWIMMING KIT AGAINST THE CURRENT: 2 motors, 2 water jets, piping, electrical panel and wired remote control.	DVKITNCC020	**DVKITNCC020**
4 MT	SWIMMING KIT AGAINST THE CURRENT: 2 motors, 2 water jets, piping, electrical panel and wired remote control.	DVKITNCC040	**DVKITNCC030**
5 MT	SWIMMING KIT AGAINST THE CURRENT: 2 motors, 2 water jets, piping, electrical panel and wired remote control.	DVKITNCC050	**DVKITNCC040**

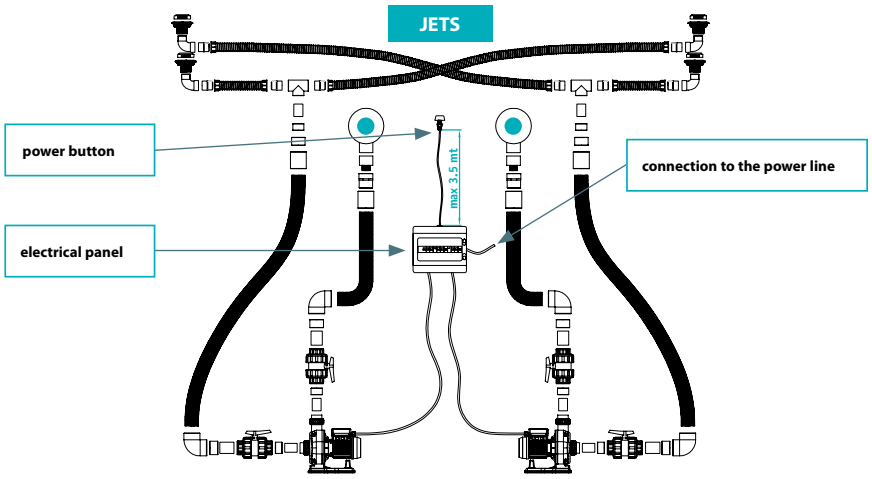

Available only on Dolcevita Naked and Dolcevita Diva LTI model.

DOLCEVITA Swim system - 7 jets hydromassage kit

	Description	Laghetto reference	Code
3 MT	7 JETS HYDROMASSAGE KIT 1 motor, 7 nozzles, electrical panel and timed wired remote control.	DVKITIDRO030	**DVKITIDRO030**
4 MT	7 JETS HYDROMASSAGE KIT 1 motor, 7 nozzles, electrical panel and timed wired remote control.	DVKITIDRO040	**DVKITIDRO040**
5 MT	7 JETS HYDROMASSAGE KIT 1 motor, 7 nozzles, electrical panel and timed wired remote control.	DVKITIDRO050	**DVKITIDRO050**

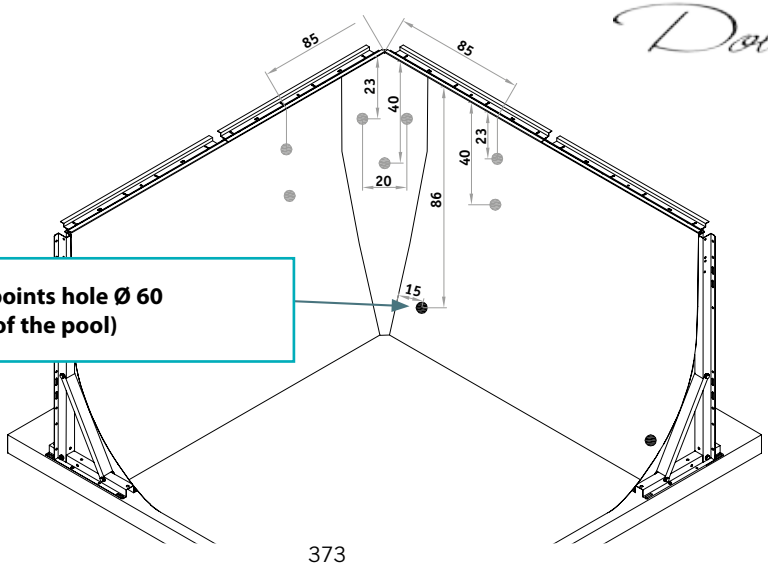

n° 2 hydro-massage suction points hole Ø 60 (in the two opposite corners of the pool)

ABOVE GROUND POOLS

DOLCEVITA: Basement sizes

CONCRETE BASE

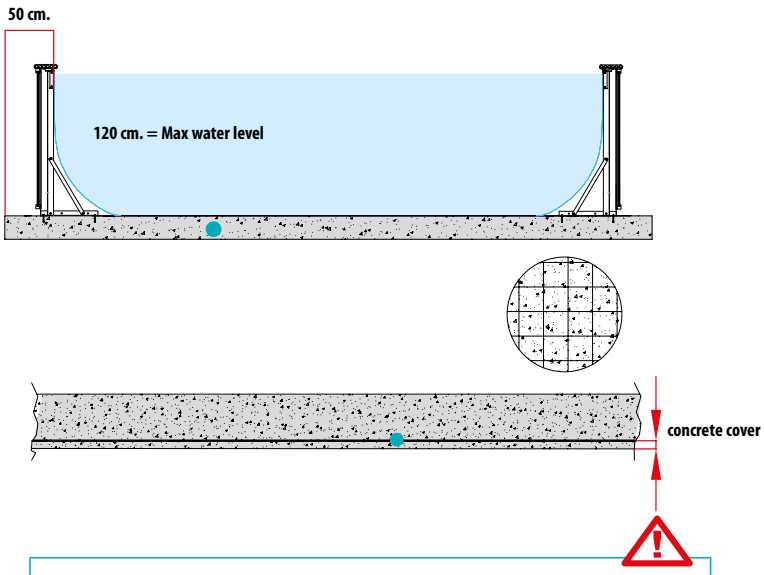

Check with your engineer which are the optimal requirements for your installation
Check the basement is really rectangular with the same diagonals
The basement must support a load of 1300 Kg by square meter given from water weight
Check the basement is achievable in case of unstable ground by geological expertise
The basement surface must be as smoothed as plaster
Tolerance gradient of the perimeter of slab = ± 1 cm

BASEMENT SIZES FOR DOLCEVITA DIVA AUTOMATIC COVER

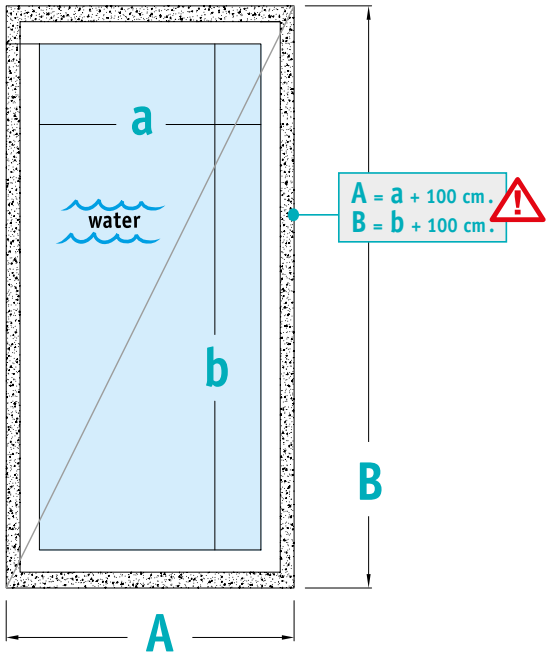

ASK FOR TECHNICAL INFORMATION TO YOUR LAGHETTO COMMERCIAL CONTACT

BASEMENT SIZES FOR DOLCEVITA DIVA LTI

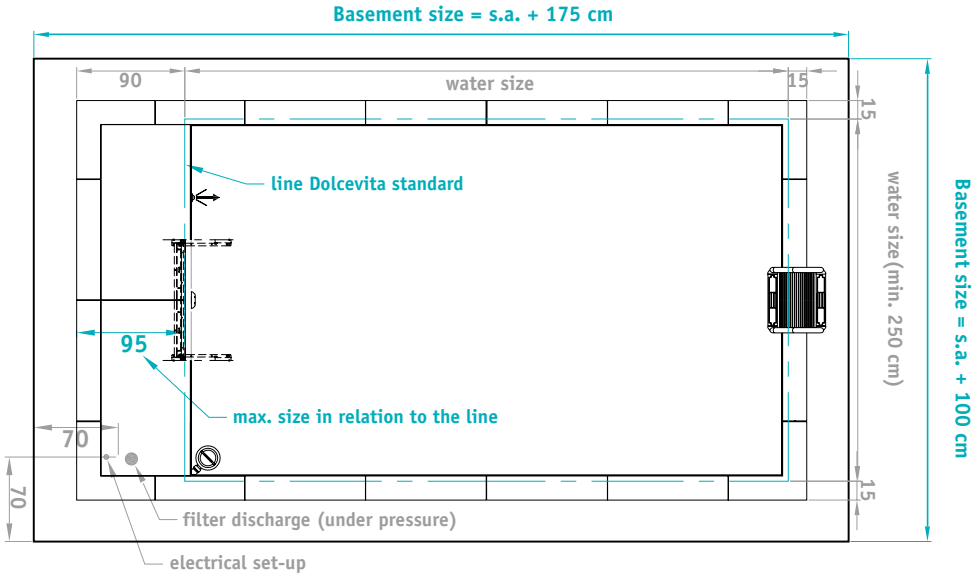

ABOVE GROUND POOLS

DOLCEVITA: Standard accessories position - Skimmer, inlet and light

Dolce Vita

35

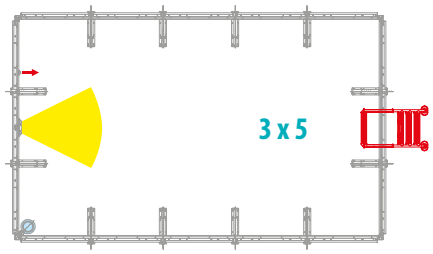

24 - 254

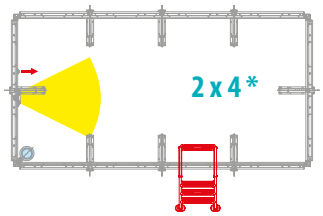

(2,5 x 4 DIVA LTI)

36

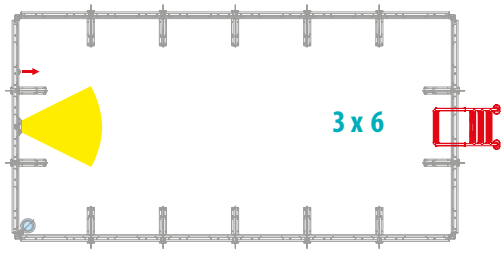

24 - 255

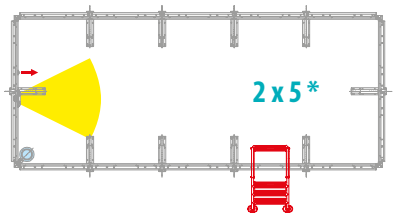

(2,5 x 5 DIVA LTI)

37

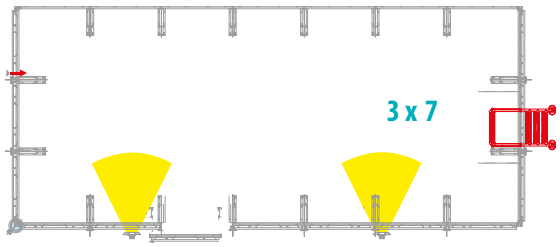

49

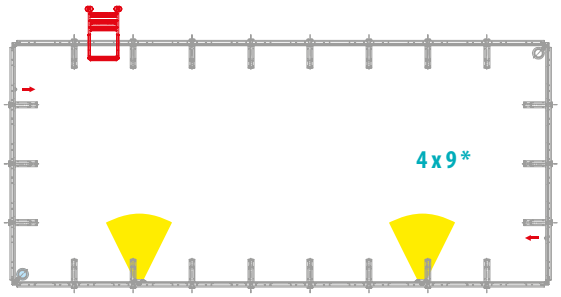

48

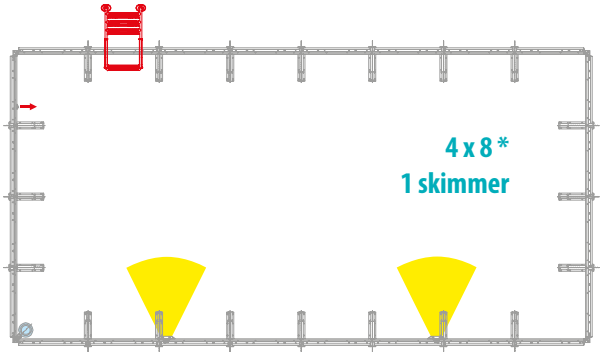

510

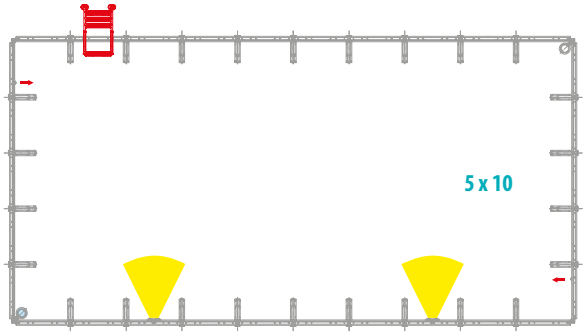

ABOVE GROUND POOLS

Steel basement structure for DOLCEVITA aboveground

Dolcevita above ground can be inserted in any context you like also avoiding the construction of a reinforced concrete slab using a special modular base frame made of powder-coated steel.

With this innovative and unique structural accessory, which can be accompanied by a mobility certificate and easy removal of the pool, you can install Dolcevita Pool in any type of situation, satisfying your every need, even the most special.

Description	Laghetto reference	Code
STEEL BASEMENT STRUCTURE FOR A NON-SLAB ASSEMBLY DOLCEVITA 2x4	DVC24KITTB	**69624**
STEEL BASEMENT STRUCTURE FOR A NON-SLAB ASSEMBLY DOLCEVITA 2x5	DVC25KITTB	**69625**
STEEL BASEMENT STRUCTURE FOR A NON-SLAB ASSEMBLY DOLCEVITA 2.5x4	DVC254KITTBS	**71282**
STEEL BASEMENT STRUCTURE FOR A NON-SLAB ASSEMBLY DOLCEVITA 2.5x5	DVC255KITTBS	**71323**
STEEL BASEMENT STRUCTURE FOR A NON-SLAB ASSEMBLY DOLCEVITA 3x5	DVC35KITTB	**69626**
STEEL BASEMENT STRUCTURE FOR A NON-SLAB ASSEMBLY DOLCEVITA 3x6	DVC36KITTB	**69627**
STEEL BASEMENT STRUCTURE FOR A NON-SLAB ASSEMBLY DOLCEVITA 3x7	DVC37KITTB	**69628**
STEEL BASEMENT STRUCTURE FOR A NON-SLAB ASSEMBLY DOLCEVITA 4x8	DVC48KITTB	**69629**
STEEL BASEMENT STRUCTURE FOR A NON-SLAB ASSEMBLY DOLCEVITA 4x9	DVC49KITTB	**69630**
STEEL BASEMENT STRUCTURE FOR A NON-SLAB ASSEMBLY DOLCEVITA 5x10	DVC510KITTB	**69631**

Dolce Vita

Dolcevita Divina: Not compatible with standard basement kit for direct assembly on the ground.

BASEMENT FOR DIRECT ASSEMBLY ON THE GROUND

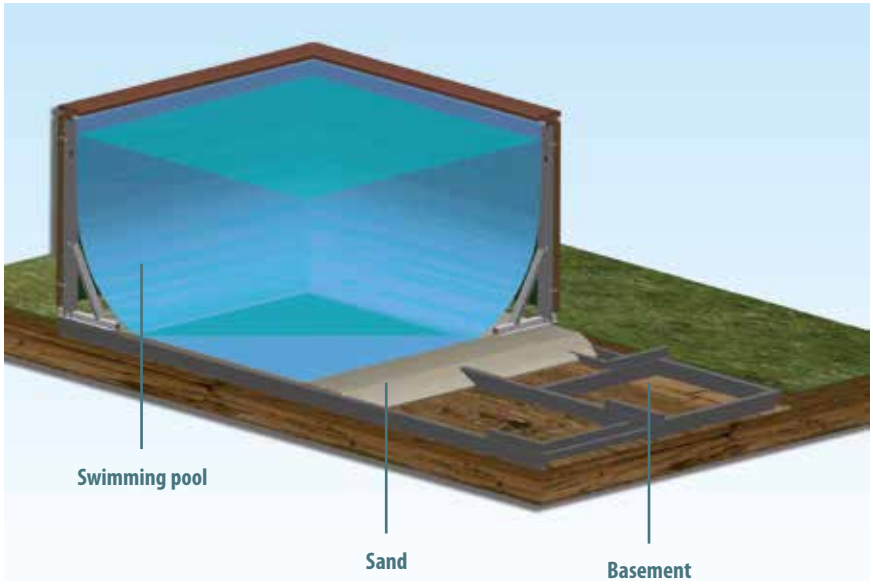

- Zero impact installation.
- For installation where no concrete basement can be made.
- Easy to move and assemble.
- Fully removable.

ABOVE GROUND POOLS

Stainless steel components to stabilize the structure of the pool

The kit is an AISI 304 stainless steel locking system consisting of fasteners that allow to prevent normal structural beddings (misalignment) of dolcevita during the filling phase.

Description	Laghetto reference	Code
Kit for DOLCEVITA 2x4	DV24KITAL	**69616**
Kit for DOLCEVITA 2x5	DV25KITAL	**69617**
Kit for DOLCEVITA 2.5x4	DV254KITAL	**71281**
Kit for DOLCEVITA 3x4	DV34KITAL	**71123**
Kit for DOLCEVITA 2.5x5	DV255KITAL	**71324**
Kit for DOLCEVITA 3x5	DV35KITAL	**69619**
Kit for DOLCEVITA 3x6	DV36KITAL	**69618**
Kit for DOLCEVITA 3x7	DV37KITAL	**69620**
Kit for DOLCEVITA 4x8	DV48KITAL	**69621**
Kit for DOLCEVITA 4x9	DV49KITAL	**69622**
Kit for DOLCEVITA 5x10	DV510KITAL	**69623**

Dolce Vita

FIXING AND ALIGMENT KIT

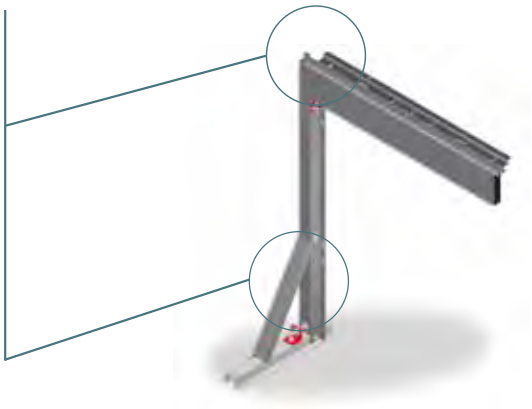

THE KIT IS AN AISI 304 STAINLESS STEEL LOCKING SYSTEM CONSISTING OF FASTENERS THAT ALLOW TO PREVENT NORMAL STRUCTURAL BEDDINGS (MISALIGNMENT) OF DOLCEVITA DURING THE FILLING PHASE.

- With the kit you can't align the pool once filled.
- It's compatible without any modification only with Dolcevita structures from April 2014.
- You can't add the kit to assembled pool, to fit it you must dismantle the pool completely.
- If the Dolcevita structure has been purchased before April 2014 some modifications to the structure are necessary.

Overflow system

Size	Finish / version	Description	Laghetto reference	Code
All	RATTAN DIVA NAKED	Overflow system	DVCSTP	**DVCSTP**

POP!

POP!

is the range of above ground pools
with which Laghetto celebrate
its first 40 years
in the swimming pool industry.

It's the result of four decades of patents
and innovative projects and represent
the highest expression of quality
on the above ground pools market.

The Pop range is available both
in 100 and 120 cm water depth
in a wide choice of soft, cool and fashion colors
you can set in a pleasant and
unconventional way in your space or garden.



STANDARD EQUIPMENT

- LED lights.
- Safety ladder.
- Exclusive Laghetto water filtration and treatment system. Choice of AstralPool sand filters.
- Special foot blocks for ground assembly.





WARRANTY 5 years 2 WARRANTY GARANZIA

POOL WARRANTY: 5 YEARS

ACCESSORIES WARRANTY: 2 YEARS

POP!

Pool liner

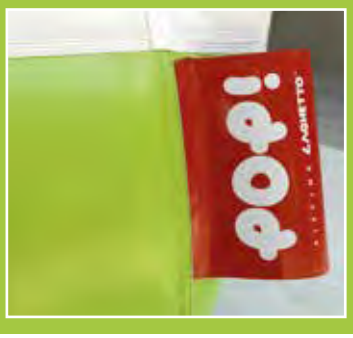

Patented Laghetto skimmer



Above-ground pool foot support



LINER

Made of PVC coated polyester fabric membrane is incredibly strong (it easily pass DIN 53354 test up to traction of 430 Kg on 5 cm) , it is treated with a special coating that prevents dirt from attaching to exposed areas and provides protection against damage caused by UV light to be very durable.
Every Laghetto POP liner is available in 6 cool colors and comes with the distinctive red label.

LAGHETTO SKIMMER

The legendary skimmer of Piscine Laghetto is directly attached to the corner of the pool liner. The floating head skims the water surface with a perfectly efficient 360 degree action. This is the most effective skimmer design on the market.
Every skimmer includes a pre-filter basket (if used with sand or cartridge filtration systems) or a special microfiber fabric filtrating element (Boa system).
The wide excursion of the floating head follows the water level precisely for a better efficiency and avoids almost completely unwanted air draw that can damage the pump of the filtration system.
Every skimmer head is equipped with devices for the safety of all swimmers.

FOOT BLOCKS

Every pool is supplied with a complete set of foot blocks that replace the need for any support under the pool legs by providing a solid base.
Foot blocks come in white color to match the structure and the top of the Liners.

Laghetto pipes



Safety ladder



Vacuum cleaner



PIPINGS

The pipes of the filtration systems are another of the high quality components that characterize Piscine Laghetto products. Pipes for POP pools are made of highly resistant and durable white corrugated PVC, with one - and - a half inch fittings, pressure mounted and glued together (factory assembled to ensure the best possible seal over time). The pipes, with threaded connectors and gaskets, are screwed to the wall fittings of the pool and to nipples of the filtering system, without using any type of cable tie.

LAGHETTO SAFETY LADDER

Introduced already back in year 2000, Piscine Laghetto safety ladder is the most stable and secure aboveground pool ladder on the market.
It's connected directly to the pool structure to avoid overturning and the outside steps can be lifted to avoid the entrance of the kids when the pool is unattended or unused.

VACUUM CLEANER

Every POP Pool kit also include a vacuum cleaner (pipe length varies according to the pool size and the number of skimmers).

AstralPool sand filters

BOA filter





SAND FILTRATION SYSTEMS

The technical partnership between Piscine Laghetto and AstralPool introduces the 6, 10 and 15 mc/h sand filters in all swimming pool kits.

LAGHETTO BOA FILTER

The practical stocking filtration has been a specialty of Laghetto for over 30 years, with tens of thousands of satisfied customers.







ABOVE GROUND POOLS

POP! model: Colors choice



... ML
CATERPILLAR GREEN



... LV
BUTTERFLY LILAC



... CR
SEA SAND



... TR
TURQUOISE BLUE



... LT
STAR WHITE



... BL
LAGHETTO BLUE

The range of Laghetto Pop pools is available in 6 colors: Caterpillar Green, Butterfly Lilac, Sea Sand, Turquoise Blue, Star White and Laghetto Blue..

EXAMPLE:

x = COLORS CHOICE

KITPOP25**x**B

KITPOP25**BL**B

POP!	WATER SIZE (m)	ENCUMBRANCE WITH FOOT SUPPORTS (m)	ENCUMBRANCE WITHOUT FOOT SUPPORTS (m)	VOLUME (m^3)
24	2,80 x 4,00 x h.1,2	3,84 x 5,04	3,60 x 4,80	13,5
25	2,80 x 5,30 x h.1,2	3,84 x 6,34	3,60 x 6,10	17
26	2,80 x 6,60 x h.1,2	3,84 x 7,64	3,60 x 7,40	21,5
27	2,80 x 7,80 x h.1,2	3,84 x 8,84	3,60 x 8,60	25
45	4,00 x 5,30 x h.1,2	5,04 x 6,34	4,80 x 6,10	24,5
46	4,00 x 6,60 x h.1,2	5,04 x 7,64	4,80 x 7,40	30,5
47	4,00 x 7,80 x h.1,2	5,04 x 8,84	4,80 x 8,60	36
49	4,00 x 9,00 x h.1,2	5,04 x 10,04	4,80 x 9,80	41,5
510	5,30 x 10,25 x h.1,2	6,34 x 11,29	6,10 x 11,05	62,5
511	5,30 x 11,50 x h.1,2	6,34 x 12,54	6,10 x 12,30	70
612	6,60 x 12,70 x h.1,2	7,64 x 13,74	7,40 x 13,50	96,5
0	2,80 x 4,00 x h.1	3,64 x 4,84	3,40 x 4,60	10,5
1	2,80 x 5,30 x h.1	3,64 x 6,14	3,40 x 5,90	14
2	2,80 x 6,60 x h.1	3,64 x 7,44	3,40 x 7,20	17,5

ABOVE GROUND POOLS

POP! model

POP!

- Pool kits with 1 / 2 skimmers, sand filter, manual pool cleaner, ladder, 1 / 2 small LED spotlights and support footblocks.

Laghetto model	Description	Total dimensions (W x L x H) cm	Water dimensions (W x L x H) cm	Water volume Litres	Packaging dimensions	Total gross weight Kg	Laghetto reference	Color	Code
POP 120 – 24	Pool kit filter 6 m³ / h 1 skimmer 1 spotlight LED	384x504	280x400x120	13500	110 x 140 x 125	184	KITPOP24MLS6	caterpillar green	**69366**
							KITPOP24CRS6	sea sand	**69369**
							KITPOP24LVS6	butterfly lilac	**69376**
							KITPOP24TRS6	turquoise blue	**69380**
POP 120 – 25	Pool kit filter 6 m³ / h 1 skimmer 1 spotlight LED	384x634	280x530x120	17000	110 x 140 x 130	205	KITPOP25MLS6	caterpillar green	**69365**
							KITPOP25CRS6	sea sand	**69370**
							KITPOP25LVS6	butterfly lilac	**69379**
							KITPOP25TRS6	turquoise blue	**69381**
POP 120 – 26	Pool kit filter 6 m³ / h 1 skimmer 1 spotlight LED	384x764	280x660x120	21500	110 x 140 x 160	224	KITPOP26CRS6	sea sand	**69371**
							KITPOP26LVS6	butterfly lilac	**69378**
							KITPOP26TRS6	turquoise blue	**69382**
POP 120 – 27	Pool kit filter 10 m³ / h 1 skimmer - 1 spotlight LED	384x884	280x780x120	26200	100 x 140 x 160	258	KITPOP27MLS	caterpillar green	**70481**
							KITPOP27CRS	sea sand	**70857**
POP 120 – 45	Pool kit filter 10 m³ / h 1 skimmer - 1 spotlight LED	504x634	400x530x120	25440	100 x 140 x 160	240	KITPOP45CRS	sea sand	**70381**
POP 120 – 46	Pool kit filter 10 m³ / h 1 skimmer - 1 spotlight LED	504x764	400x660x120	30500	110 x 140 x 160	262	KITPOP46MLS	caterpillar green	**69367**
POP 120 – 47	Pool kit filter 10 m³ / h 1 skimmer - 1 spotlight LED	504x884	400x780x120	36000	110 x 140 x 170	287	KITPOP47MLS	caterpillar green	**69368**
							KITPOP47CRS	sea sand	**69373**
POP 120 – 49	Pool kit filter 15 m³ / h 2 skimmers - 2 spotlights LED	504x1004	400x900x120	43200	100 x 140 x 180	335	KITPOP49xGS	-	-

- Pool kits with 1 skimmer, sand filter, manual pool cleaner, ladder, small LED spotlight and support feet.

Laghetto model	Description	Total dimensions (W x L x H) cm	Water dimensions (W x L x H) cm	Water volume Litres	Packaging dimensions	Total gross weight Kg	Laghetto reference	Color	Code
POP 120 – 510	Pool kit filter 15 m³ / h, 2 skimmers, 2 spotlights LED	634 x 1129	530 x 1025 x 120	65,200	120x140x180	402	KITPOP510xGS	-	-
POP 120 - 511	Pool kit filter 15 m³ / h, 2 skimmers, 2 spotlights LED	634 x 1254	530 x 1150 x 120	73,140	120x140x180	420	KITPOP511xGS	-	-
POP 120 - 612	Pool kit filter 15 m³ / h, 2 skimmers, 2 spotlights LED	764 x 1374	660 x 1270 x 120	100,600	120x140x180	480	KITPOP612xGS	-	-
POP 100 - 0	Pool kit filter 6 m³ / h, 1 skimmer, 1 spotlight LED	364 x 484	280 x 400 x 100	10,500	90x140x120	164	KITPOP0xS6	-	-
POP 100 - 1	Pool kit filter 6 m³ / h, 1 skimmer, 1 spotlight LED	364 x 614	280 x 530 x 100	14,000	90x140x120	170	KITPOP1xS6	-	-
POP 100 - 2	Pool kit filter 6 m³ / h, 1 skimmer, 1 spotlight LED	364 x 744	280 x 660 x 100	17,500	90x140x120	176	KITPOP2xS6	-	-

Substitute **X** for the following 2 letters, according to the desired color combination:

ML	Caterpillar green	**TR**	Turquoise blue
CR	Sea sand	**LT**	Star white
LV	Butterfly lilac		

ABOVE GROUND POOLS

POP! accessories - Covers



POOL COVER



SUN COVER

Description	Code
Isothermal bubble cover POP24	**LACS24**
Winter cover grey POP24	**LACH24G**
Winter cover beige POP24	**LACH24BE**
Winter cover blue POP24	**LACH24BL**
Isothermal bubble cover POP25	**LACS25**
Winter cover grey POP25	**LACH25G**
Winter cover beige POP25	**LACH25BE**
Winter cover blue POP25	**LACH25BL**
Isothermal bubble cover POP26	**LACS26**
Winter cover grey POP26	**LACH26G**
Winter cover beige POP26	**LACH26BE**
Winter cover blue POP26	**LACH26BL**
Isothermal bubble cover POP27	**LACS27**
Winter cover grey POP27	**LACH27G**
Winter cover beige POP27	**LACH27BE**
Winter cover blue POP27	**LACH27BL**
Isothermal bubble cover POP45	**LACS45**
Winter cover grey POP45	**LACH45G**
Winter cover beige POP45	**LACH45BE**
Winter cover blue POP45	**LACH45BL**
Isothermal bubble cover POP46	**LACS46**
Winter cover grey POP46	**LACH46G**
Winter cover beige POP46	**LACH46BE**
Winter cover blue POP46	**LACH46BL**

Description	Code
Isothermal bubble cover POP47	**LACS47**
Winter cover grey POP47	**LACH47G**
Winter cover beige POP47	**LACH47BE**
Winter cover blue POP47	**LACH47BL**
Isothermal bubble cover POP49	**LACS49**
Winter cover grey POP49	**LACH49G**
Winter cover beige POP49	**LACH49BE**
Winter cover blue POP49	**LACH49BL**
Isothermal bubble cover POP510	**LACS510**
Winter cover grey POP510	**LACH510G**
Winter cover beige POP510	**LACH510BE**
Winter cover blue POP510	**LACH510BL**
Isothermal bubble cover POP511	**LACS511**
Winter cover grey POP511	**LACH511G**
Winter cover beige POP511	**LACH511BE**
Winter cover blue POP511	**LACH511BL**
Isothermal bubble cover POP612	**LACS612**
Winter cover grey POP612	**LACH612G**
Winter cover beige POP612	**LACH612BE**
Winter cover blue POP612	**LACH612BL**

ABOVE GROUND POOLS

POP! model: Standard accessories position - Skimmer, inlet and light

24 - 0

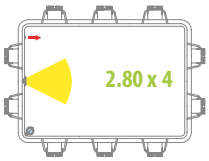

25 - 1

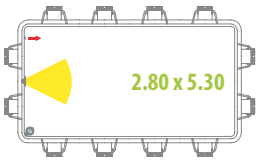

26 - 2

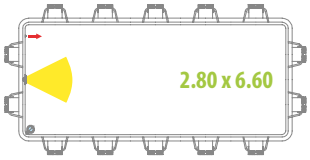

27



45

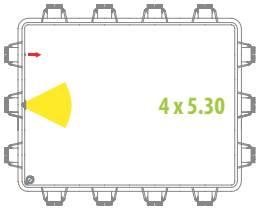

46

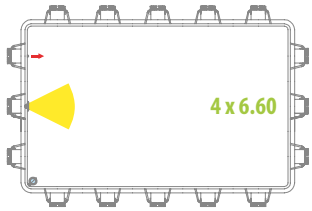

47

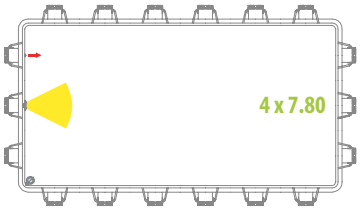

49

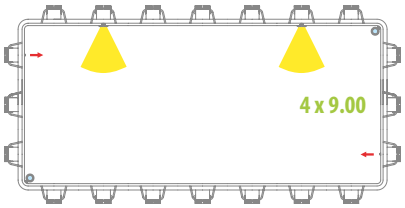

511

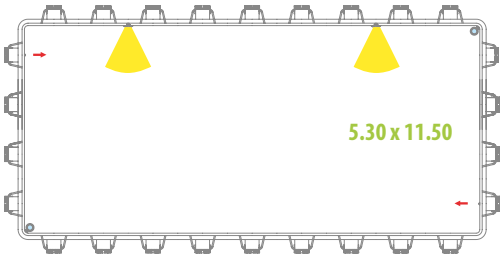

510



612

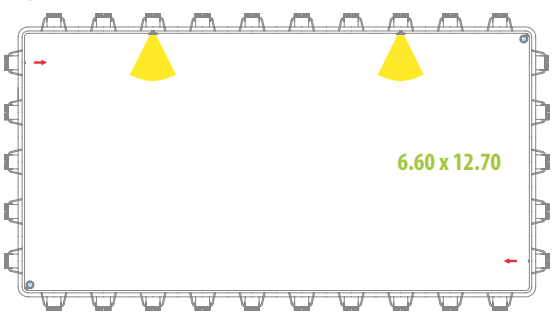

INOXPOOL

Inoxpool

Pool manufactured in one piece in satin-finish, **AISI-316L stainless steel**.

With a 2 mm thickness wall and with skimmers. It includes a non-slip bottom.

- Hydraulic pre-installation included.
- Ready to connect.
- Easy installation, without building work.
- Total security and quality.

2 Differents models:

OPTIMAL



Optimal model is a residential pool made in one piece in satin-finish stainless steel, AISI-316L including skimmers. It includes a ladder.

WELLNESS



Wellness model is a residential pool made in one piece in satin-finish stainless steel, AISI-316L including skimmers. Including:

- Steps
- Hydromassage bench
- Hydromassage cascade
- Hydromassage water jet
- Cover



INOXPOOL

Model comparison

	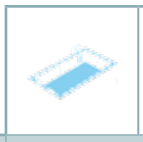		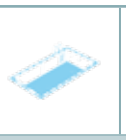		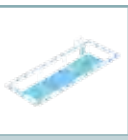		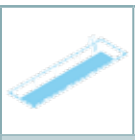	
	5 x 3 x 1.2 m		**7 x 3 x 1.2 m**		**9 x 3 x 1.2 m**		**12 x 3 x 1.2 m**	
MODELS	**Optimal**	**Wellness**	**Optimal**	**Wellness**	**Optimal**	**Wellness**	**Optimal**	**Wellness**
Code	**71499**	**71500**	**71504**	**71505**	**71511**	**71512**	**71518**	**71519**
General specifications								
Internal dimensions (m)	5 x 2.85 x 1.2		7 x 2.85 x 1.2		8.84 x 2.85 x 1.2		11.84 x 2.85 x 1.2	
External dimensions (m)	5.7 X 3.6 X 1.3		7.7 X 3.6 X 1.3		9.6 X 3.6 X 1.3		12.6 X 3.6 X 1.3	
Water capacity (m^3)	18		24		31		41	
Empty weight / Full weight (kg)	2100 / 20100	2300 / 20300	2650 / 26650	2850 / 26850	3250 / 34250	3350 / 34350	4050 / 45050	4200 / 45200
Characteristics								
Skimmers	2	2	2	2	3	3	4	4
Overflow suction	-	-	-	-	-	-	-	-
Return inlet	3	4	3	4	4	5	5	6
Bottom cleaner nozzle	1	1	1	1	1	1	2	2
Main drains	2	2	2	2	2	2	2	2
Projectors	2	2	2	2	2	2	3	3
Accessories								
Ladder (3 steps)	•	-	•	-	•	-	•	-
Steps	-	•	-	•	-	•	-	•
Hydromassage bench	-	•	-	•	-	•	-	•
Hydromassage cascade	-	•	-	•	-	•	-	•
Hydromassage water jet	-	•	-	•	-	•	-	•
Hydromassage beds	-	-	-	-	-	-	-	-
Countercurrent	-	-	-	-	-	-	-	-
Cover	-	•	-	•	-	•	-	•
Recommended equipment								
Hydraulic button and timer	-	**45218 + 35761**	-	**45218 + 35761**	-	**45218 + 35761**	-	**45218 + 35761**
Blower pump for hydro beds	-	-	-	-	-	-	-	-
Blower pump for hydro bank	-	**35388**	-	**35388**	-	**35388**	-	**35388**



SPAS AND SAUNAS

388 • Our range of spas
389 • Colour chart for spas
389 • Coding structure for private spas with cabinet
389 • Types of coatings
390 • Optional equipment
391 • Standard equipment
396 • Spa range - Ocean Dreams range
399 • Spa range - Essential range
401 • Spa range - Swimspa range
403 • In-ground residential spas
405 • Compact filtration for spas
406 • Complements for spas
408 • Liner accessories
412 • Pool Jet accessories
413 • Accessories for minispas
414 • Electrical accessories for spas / mini spas
415 • Air blowers
417 • Saunas
420 • Accessories - Saunas

OUR RANGE OF SPAS



Ocean Dreams range

A range of spas intended for the most demanding users. Ergonomic spas, with numerous features and configuration settings.



Swimspa range

Swimspas are small residential pools.

Versatile, powerful and compact. A health and wellness centre available all year round.



Essential range

The Essential range seeks to strike a balance between functionality, performance and cost.



Commercial range

Spas designed for commercial spaces, wellness centres, hotels... A wide range of options and finishes that cover all needs. Spas with both an acrylic and mosaic tile finish.

We reserve the right to change, wholly or partially, the features of our products and the contents of this document, without prior notice

COLOUR CHART FOR SPAS

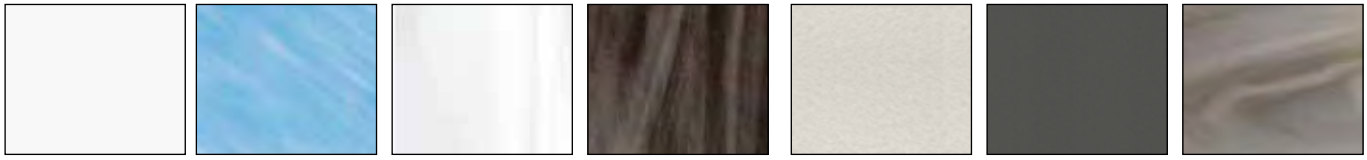

N° 44 WHITE | N° 46 BLUE MARBLE | N° 59 STERLING | N° 64 PEARL SHADOW | N° 72 PEARL CAMEO | N° 27 SILVER | N° 18 SAND

CODING STRUCTURE FOR PRIVATE SPAS WITH CABINET

The coding structure for the wood cabinet spas is made up of 10 digits. The first 5 digits refer to the Spa model and the following ones indicate the range, coating and the colour of the accessories as it is also necessary to specify the colour.

This coding system will be structured in the following way:

X X X X X	X	X	X	XX	CL	XX
Spa Model	Range	Coating type	Accessory colour	Accessories	Variation	Colour

Position 1 to 5: Standard code 5 figure code	
Position 6: Product range definition	
S	Standard
L	Luxe
A	Plus
Position 7: Coating type definition	
1	Coastal Grey portable spa with cabinet
4	Portable spa without cabinet
E	In-ground spa, compact kit version
B	Urban Grey cabinet
K	Graphite cabinet
P	Graphite cabinet with screw
R	Thunder cabinet
Q	Thunder cabinet with screw
T	Creek cabinet
C	Infinity cabinet
S	Solid Surface
W	Butterfly cabinet
Position 8: Accessories colour definition	
3	Stainless steel
Positions 9 to 10: Options configuration definition	
00	Std + Cover
05	Std + Cover + ECOSpa
20	Std + Cover + LumiPlus
21	Std + Cover + ECOSpa + LumiPlus
23	Std + Cover + LumiPlus + Audio
32	Std + Cover + LumiPlus + Stainless steel bar on cabinet
27	Std + Cover + LumiPlus + ECOSpa + Stainless steel bar on cabinet
33	Std + Cover + LumiPlus + Audio + Stainless steel bar on cabinet
34	Std + Cover + LumiPlus + ECOSpa + Audio
35	Std + Cover + LumiPlus + ECOSpa + Audio + Stainless steel bar on cabinet
56	Std + Cover + LumiPlus + EcoSpa + Audio + Stainless Steel Bar on Cabinet + Wi-Fi Touch Panel
55	Std + Cover + LumiPlus + EcoSpa + Nordic Insulation + Audio + Stainless Steel Bar on Cabinet + Wi-Fi Touch Panel
0J	Std + Cover + LumiPlus + EcoSpa + Stainless Steel Bar on Cabinet + Blue Connect Plus

TYPES OF COATINGS

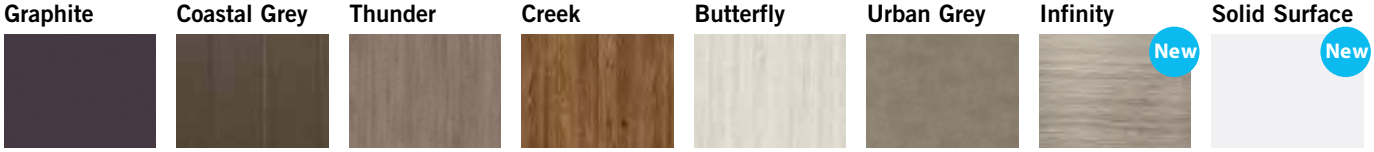

While stocks last

OPTIONAL EQUIPMENT

EcoSpa thermal insulation



EcoSpa is one of the best thermal insulation systems currently available in the market. This comprehensive system manages to minimize heat loss by convection and conduction, and to use the heat generated by the heater and pumps found in the spa. The walls have an exclusive 30 mm thick layer of polyurethane foam insulation. A strong ABS substructure of insulating plastic at the bottom of the spa ensures total water tightness. Finally, an isothermal cover of between 100 and 130 cm thick gives extra insulation.

All of these features reduce heat loss to a minimum and maximize the recovery of the heat generated by the spa's components, thus reducing energy consumption by up to 67%. With ECOSpa, consumption to maintain the water at 38º with a room temperature of 20º is 6.48 kW/h, while without this system it is 19.52 kW/h.

EcoSpa option

Nordic Insulation System



NORDIC INSULATION SYSTEM is designed for cold environments and can enhance your spa's energy efficiency.

The Nordic insulation system comprises a 10mm insulating material composed of five layers. This insulation layer is positioned in the sides and curves of the spa to create an insulating air chamber inside. The five layers are made from:

- Aluminium.
- RC9 bubble + low-density polyethylene (double layer).
- FONPEX non-crosslinked polyethylene foam (20 kg/m^3).
- RC9 bubble + low-density polyethylene (double layer).
- Aluminium.

This system is an improvement over the EcoSpa class as it minimizes temperature leak zones and optimizes spa energy performance in extreme temperature situations.

Difference between the EcoSpa and Nordic insulation systems in thermal imaging:

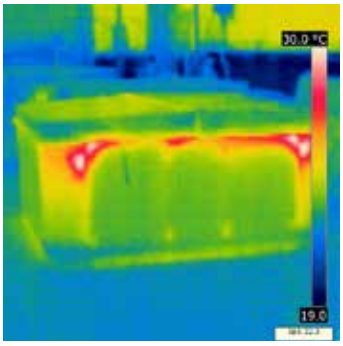

Spa with EcoSpa

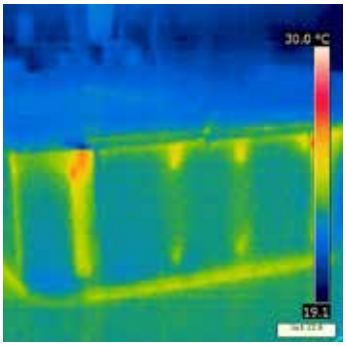

Spa with Nordic insulation system

Wi-Fi Touch panel



The Balboa Wi-Fi control panel is an app for your smart device (Android™ or iPhone®) which lets you access your spa over the internet from anywhere, home or away. All you need is a 3G, 4G or Wi-Fi connection to access and control your spa over your mobile phone or tablet.

By using the Wi-Fi control panel, you can make sure that your spa is ready for use every time you want to take a dip. Instead of having to go outside and fiddle around with the buttons on the control panel, this app will enable you to change your spa's settings from your mobile phone or tablet.
The app has a full control interface so you can set the water temperature, run the massage pumps and even control the filtration cycle.

OPTIONAL EQUIPMENT

LumiPlus + Bluetooth Audio System, only available for fully skirted portable spas







Natural treatments are one of the main sources of health provided by a spa. Chromotherapy and music therapy are the perfect accompaniment to any hot tub.

Chromotherapy is the natural technique based on the use of colours to help your mind and body find their natural physical, mental and emotional balance. By choosing the LumiPlus option, 5 LED spotlights are added to your spa so that you can enjoy a spectacular ambient lighting system. Thanks to the 5 LED spotlights, you can choose the colours that match your mood at any given time.



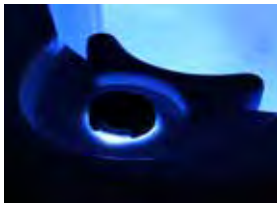



The Bluetooth Audio System enables music to be played from any mobile phone, MP4 Player or audio equipment via a simple Bluetooth connection, without the need for any cables and with coverage of up to 7 metres. Now you can truly make your spa a centre of relaxation, health and beauty.

The Advance range has a 4.1 Bluetooth Audio system made up of 4 external loudspeakers, an internal subwoofer and a Bluetooth receiver.

The Essential range has a 2.1 Bluetooth Audio system made up of 2 external loudspeakers, an internal subwoofer and a Bluetooth receiver.

LumiPlus + Bluetooth Audio System option

Blue Connect Plus



Enjoy your Hot Tub with peace of mind

Blue Connect analyzes the quality of the water and shows you the needed chemicals for the maintenance of your Hot Tub.

Advanced technology connected to your smartphone

Blue Connect Plus is a smart hot tub water analyser that controls the quality of your water and informs you about the number of products available for your hot tub. All from your smartphone.

Sit back and relax. Thanks to Blue Connect, your Hot Tub is at your fingertips

Monitor your Hot Tub wherever you are with the connected Hot Tub water analyzer and the free Blue Connect app.

STANDARD EQUIPMENT

Balboa Electronics, standard in all spas

AstralPool only uses new generation control systems made by BALBOA, a leading supplier of electronic controls for hydromassage tubs and spas.

With the continual improvement made to its designs and its innovative solutions to increase the quality and reliability of its systems, the Balboa EL/GL and VS/GS family of control systems has been designed using patented M7 technology for temperature and flow sensors, and its new universal control system increases the flexibility of its functions and reduces installation and configuration problems.

These characteristics make the controls even more reliable, easier to install and easier to use.



STANDARD EQUIPMENT

Ozone disinfection system

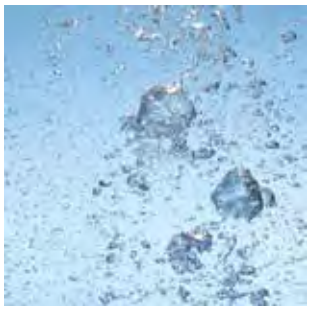

Ozone is "active oxygen", a special element found in nature. Ozone is a powerful oxidising agent and, unlike traditional chemical products, it does not leave toxic waste behind, and when it has done its work it simply turns back into oxygen. Moreover, tests have proved that it effectively kills bacteria and mould.

AstralPool manufactures spas that give high quality performance and supplies an integrated ozone generator as a standard feature in all of its portable spas. The ozonator has numerous benefits: the water in spas will be safer, cleaner, purer, free of chloramines, trihalomethane and other chlorine by-products, with a high redox potential. Greater water clarity and algae control are obtained using lower concentrations of chemical substances.

A spa with water purified with ozone is one of the most pleasant relaxation and hydrotherapy experiences.

Ultraviolet disinfection system

Spas equipped with the ultraviolet system are disinfected using UV technology. Thanks to a UV lamp, all bacteria in the water are destroyed. The advantages of the ultraviolet system can be summarized as follows:

- It ensures water remains fresh, clean and clear.
- It is an efficient and safe way of disinfecting the water.
- Its UV-C light breaks down combined chlorine.
- It protects the water from germs.
- It keeps the formation of mould, bacteria and algae under control.
- It can reduce the amount of chlorine and other chemical products used by up to 80%.
- It prevents the smell of chlorine and irritation to the skin and eyes (bloodshot eyes).
- It is more environmentally friendly than traditional methods.

Using this system, all bacteria, mould and algae will automatically be removed from your spa, and it will be protected from germs without the need for any kind of maintenance.

Aroma, only available for spas with a blower



Aromatherapy offers the therapeutic properties of pure aromas for a natural treatment and makes a significant contribution in helping to restore your natural state of balance and harmony.

Nobody is indifferent to smells. They bring to mind emotions, memories and ideas. Increase the relaxing effect of your tub by adding a fragrance!



SPA RANGE

Model comparison



	OCEAN DREAMS RANGE						ESSENTIAL RANGE		
MODELS	**Pure**	**New'Art**	**Evolution**	**Atlantida 70**	**Pacific 70**	**Ocean 70**	**Select E**	**Emotion E**	**Equilibre E**
Code	**68450**	**68449**	**32474**	**62399**	**69130**	**69863**	**76894**	**69122**	**73076**
General Information									
Size cm (± 2 cm)	220 x 220 x 78	220 x 220 x 78	233 x 233 x 91	216 x 216 x 90	216 x 216 x 90	216 x 167 x 74	216 x 216 x 90	216 x 216 x 90	216 x 148 x 90
Places (Seats/Loungers)	4 (4 / -)	5 (3 / 2)	5 (3 / 2)	5 (3 / 2)	6 (5 / 1)	3 (1 / 2)	6 (5 / 1)	5 (3 / 2)	3 (2 / 1)
Graphite Cabinet	-	-	•	•	•	•	•	•	•
Coastal Grey cabinet	-	-	-	-	-	-	-	-	-
Thunder Cabin	-	-	Optional	Optional	Optional	Optional	Optional	Optional	-
Creek Cabinet	-	-	Optional	Optional	Optional	Optional	-	-	-
Butterfly Cabinet	-	-	Optional	Optional	Optional	Optional	-	-	-
Solid surface Cabinet	•	•	-	-	-	-	-	-	-
Without cabinet	-	-	Optional	Optional	Optional	Optional	Optional	Optional	Optional
Options									
EcoSpa thermal insulation	Optional	Optional	Optional	Optional	Optional	Optional	Optional	Optional	Optional
Nordic Insulation	Optional	Optional	Optional	Optional	Optional	Optional	-	-	-
Bluetooth Audio system	Optional (Sist. 4.1)	Optional (Sist. 4.1)	Optional (Sist. 4.1)	Optional (Sist. 4.1)	Optional (Sist. 4.1)	Optional (Sist. 4.1)	Optional (Sist. 2.1)	Optional (Sist. 2.1)	Optional (Sist. 2.1)
LumiPlus LED lighting system	•	•	•	•	•	•	Optional	Optional	Optional
Stainless steel jets	•	•	•	•	•	•	•	•	•
Stainless steel bar	-	-	•	•	•	•	-	-	-
Wi-Fi Touch Panel	Optional	Optional	Optional	Optional	Optional	Optional	-	-	-
Blue Connect Plus	-	-	Optional	Optional	Optional	Optional	-	-	-
Configurations									
No of jets	27	28	54	52	50	42	50	28	26
No. of blower nozzles	12	14	16	14	10	-	-	16	-
Waterfalls	-	-	1	2	2	-	1	-	-
Headrests	2	3	3	3	3	2	3	3	3
Digital control panel	1	1	2	1	1	1	1	1	1
Oxynator	-	-	-	-	-	-	•	•	-
Ultraviolet	•	•	•	•	•	•	-	-	-
Aromatherapy	•	•	•	•	•	-	-	-	-
Chromotherapy	5 LEDs + light Tab	5 LEDs + light Tab	5 LEDs + light Tab	5 LEDs + light Tab	5 LEDs + light Tab	5 LEDs + light Tab	1 LED	1 LED	1 LED
Structure and Cover									
High-resistance metal structure	•	•	•	•	•	•	•	•	•
Insulating ABS base	•	•	•	•	•	•	•	•	•
Isothermal cover	•	•	•	•	•	•	•	•	•
Technical equipment									
Filter pump	250 W	250 W	250 W	250 W	250 W	250 W	250 W	-	-
Massage pump	1.8 kW / 2.5 HP	1.8 kW / 2.5 HP	2 x 2.2 kW / 3 HP	2 x 1.8 kW / 2.5 HP	2 x 1.8 kW / 2.5 HP	2.2 kW / 3 HP	2 x 1.8 kW / 2.5 HP	1 x 1.8 kW / 2.5 HP	1 x 2.2 kW / 3 HP, 2 Vel.
Blower pump	1150 W	1150 W	400 W	400 W	400 W	-	-	400 W	-
Electric heater	3 kW	3 kW	3 kW	3 kW	3 kW	3 kW	3 kW	3 kW	3 kW
Power consumption and capacity									
Consumption in low amps (W)	3280 W	3280 W	5200 W	4400 W	4400 W	3280 W	3870 W	3400 W	3460 W
Required power (A) at 230 V	14.3 A	14.3 A	22.6 A	19.1 A	19.1 A	14.3 A	16.8 A	14.8 A	15.0 A
230 V or 400 V III connection	•	•	•	•	•	•	•	•	•
Water capacity (litres)	975 l	975 l	1.610 l	1.138 l	1.138 l	780 l	930 l	930 l	700 l
Spa weight (Empty / Full)	450 kg / 1425 kg	450 kg / 1425 kg	378 kg / 1988 kg	327 kg / 1227 kg	327 kg / 1465 kg	229 kg / 1009 kg	330 kg / 1310 kg	327 kg / 1257 kg	229 kg / 929 kg

SPA RANGE

Model comparison









	SWIMSPA RANGE				IN-GROUND RANGE		
MODELS	**Swimspa Dual**	**Swimspa Mediterranea**	**Swimspa Creta**	**Swimspa Compact**	**Evolution 70**	**Thalassa E**	**Ronda 30**
Code	**69126**	**64414**	**67203**	**69128**	**49722**	**78678**	**49859**
General Information							
Size cm (± 2 cm)	575 x 230 x 138	500 x 230 x 138	400 x 230 x 138	400 x 230 x 138	216 x 216 x 90	216 x 216 x 90	Ø 205
Places (Seats/Loungers)	1 Vertical + 3 (2 / 1)	3 (2 / 1)	3 (2 / 1)	1 Vertical	5 (3 / 2)	6 (5 / 1)	5 (5 / 0)
Graphite Cabinet	-	-	-	-	-	-	-
Coastal Grey cabinet	YES	YES	YES	YES	-	-	-
Thunder Cabin	-	-	-	-	-	-	-
Creek Cabinet	-	-	-	-	-	-	-
Butterfly Cabinet	-	-	-	-	-	-	-
Solid surface Cabinet	-	-	-	-	-	-	-
Without cabinet	Optional	Optional	Optional	Optional	Yes	Yes	Yes
Options							
EcoSpa thermal insulation	Optional	Optional	Optional	Optional	-	-	-
Nordic Insulation	-	-	-	-	-	-	-
Bluetooth Audio system	Optional (Sist. 4.1)	Optional (Sist. 4.1)	Optional (Sist. 4.1)	Optional (Sist. 4.1)	-	-	-
LumiPlus LED lighting system	•	•	•	•	-	-	-
Stainless steel jets	•	•	•	•	•	•	•
Stainless steel bar	•	•	•	•	-	-	-
Wi-Fi Touch Panel	-		-	-	-	-	-
Blue Connect Plus	Optional	Optional	Optional	Optional	Optional	Optional	Optional
Configurations							
No of jets	15 + 5 Turbo Jets + 37 Jets	25 + 5 Turbo jets	48 + 4 Turbo jets	18 + 5 Turbo jets	52 + 16	34	20 + 10
No. of blower nozzles	-	-	-	-	-	16	-
Waterfalls	-	1	-	-	-	-	-
Headrests	3	1	3	-	3	3	-
Digital control panel	3	2	2	2	2	Yes	Yes
Oxynator	-	-	-	-	-	-	-
Ultraviolet	Yes	Yes	Yes	Yes	-	-	-
Aromatherapy	-	-	-	-	-	-	-
Chromotherapy	5 LEDs + light Tab	5 LEDs + light Tab	5 LEDs + light Tab	5 LEDs + light Tab	Yes	1 LED (CHROMOTHERAPY)	1 LED (CHROMOTHERAPY)
Structure and Cover							
High-resistance metal structure	•	•	•	•	•	•	•
Insulating ABS base	•	•	•	•	Yes	Yes	Yes
Isothermal cover	•	•	•	•	•	Optional	Optional
Technical equipment							
Filter pump	250 W + 250 W	250 W	250 W	250 W	600 W	600 W	600 W
Massage pump	3 x 2.2 kW / 3 HP + 2.2 kW / 3 HP	3 x 2.2 kW / 3 HP	3 x 2.2 kW / 3 HP	3 x 2.2 kW / 3 HP	2 x 2.2 kW / 3 HP	1 x 1.8 kW / 2.5 HP	1 x 1.8 kW / 2.5 HP
Blower pump	-	-	-	-	900 W	900 W	900 W
Electric heater	3 kW	3 kW	3 kW	3 kW	3 kW	3 kW	3 kW
Power consumption and capacity							
Consumption in low amps (W)	9500 W	7000 W	7000 W	7000 W	5927 W	3650 W	3650 W
Required power (A) at 230 V	41.3 A	30.4 A	30.4 A	30.4 A	25.8 A	15.9 A	15.9 A
230 V or 400 V III connection	•	•	•	•	•	•	•
Water capacity (litres)	6780 l	8500 l	6000 l	6000 l	1610 l	980 l	780 l
Spa weight (Empty / Full)	1379 kg / 8159 kg	1177 kg / 9677 kg	1177 kg / 7177 kg	1150 kg / 7150 kg	378 Kg / 1988 Kg	330 kg / 1310 kg	307 kg / 1445 kg

SPA RANGE - OCEAN DREAMS RANGE

Pure - Code 68450



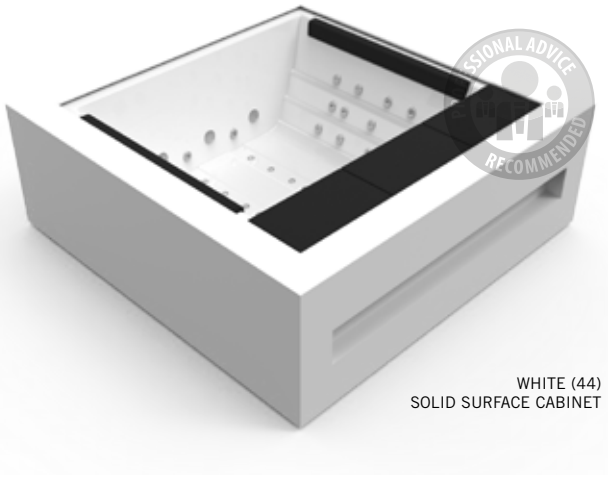

TECHNICAL SHEET	
Size in cm (± 2cm)	220 x 220 x 78
Positions (Seats / Loungers)	4 (4 / -)
Jets + blower nozzles	27 + 12
Maximum consumption in low amp - (A) at 230 V	3280 W - 14.3 A

Spa coding with options generated from the table on page 389.

Options:
- ECOSpa
- Audio Bluetooth 4.1
- Nordic Insulation
- Wi-Fi Touch Panel
- Blue Connect Plus

Description	Code
PURE White Solid Surface Cabinet + PureLine + ECOSpa	**68450SS336**
PURE White Solid Surface Cabinet + PureLine + Bluetooth Audio+ ECOSpa	**68450SS337**

New'Art - Code 68449





TECHNICAL SHEET	
Size in cm (± 2cm)	220 x 220 x 78
Positions (Seats / Loungers)	5 (3 / 2)
Jets + blower nozzles	28 + 14
Maximum consumption in low amp - (A) at 230 V	3280 W - 14.3 A

Spa coding with options generated from the table on page 389.

Options:
- ECOSpa
- Audio Bluetooth 4.1
- Nordic Insulation
- Wi-Fi Touch Panel
- Blue Connect Plus

Description	Code
NEW'ART White Solid Surface Cabinet + PureLine + ECOSpa	**68449SS336**
NEW'ART White Solid Surface Cabinet + PureLine + Bluetooth Audio + ECOSpa	**68449SS337**

We reserve the right to change, wholly or partially, the features of our products and the contents of this document, without prior notice

SPA RANGE - OCEAN DREAMS RANGE

Evolution - Code 32474





STERLING COLOUR (59)
THUNDER CABINET

TECHNICAL SHEET	
Size in cm (± 2cm)	233 x 233 x 90
Positions (Seats / Loungers)	5 (3 / 2)
Jets + blower nozzles	54 + 16
Maximum consumption in low amp - (A) at 230 V	5200 W - 22,6 A

Spa coding with options generated from the table on page 389.

Options:
- ECOSpa
- Audio Bluetooth 4.1
- Nordic Insulation
- Wi-Fi Touch Panel
- Blue Connect Plus

Description	Code
EVOLUTION Metallic structure without furniture + Stainless steel jets + LumiPlus + Cover	**32474L4320**
EVOLUTION Graphite cabinet + Stainless steel jets + Stainless steel bar + LumiPlus + Cover	**32474LK332**
EVOLUTION Thunder cabinet + Stainless steel jets + Stainless steel bar + LumiPlus + Cover	**32474LR332**
EVOLUTION Creek cabinet + Stainless steel jets + Stainless steel bar + LumiPlus + Cover	**32474LT332**
EVOLUTION Butterfly Cabinet + Stainless Steel Jets + Stainless Steel Bar + LumiPlus + Cover	**32474LW332**

Atlantida 70 - Code 62399





STERLING COLOUR (59)
THUNDER CABINET

TECHNICAL SHEET	
Size in cm (± 2cm)	216 x 216 x 90
Positions (Seats / Loungers)	5 (3 / 2)
Jets + blower nozzles	52 + 14
Maximum consumption in low amp - (A) at 230 V	4400 W / 19.1 A

Spa coding with options generated from the table on page 389.

Options:
- ECOSpa
- Audio Bluetooth 4.1
- Nordic Insulation
- Wi-Fi Touch Panel
- Blue Connect Plus

Description	Code
ATLANTIDA 70 Metallic structure without furniture + Stainless steel jets + LumiPlus + Cover	**62399A4320**
ATLANTIDA 70 Graphite cabinet + Stainless steel jets + Stainless steel bar + LumiPlus + Cover	**62399AK332**
ATLANTIDA 70 Thunder cabinet + Stainless steel jets + Stainless steel bar + LumiPlus + Cover	**62399AR332**
ATLANTIDA 70 Creek cabinet + Stainless steel jets + Stainless steel bar + LumiPlus + Cover	**62399AT332**
ATLANTIDA 70 Butterfly Cabinet + Stainless Steel Jets + Stainless Steel Bar + LumiPlus + Cover	**62399AW332**

We reserve the right to change, wholly or partially, the features of our products and the contents of this document, without prior notice

SPA RANGE - OCEAN DREAMS RANGE

Pacific 70 - Code 69130





STERLING COLOUR (59)
THUNDER CABINET

TECHNICAL SHEET	
Size in cm (± 2cm)	216 x 216 x 90
Positions (Seats / Loungers)	6 (5 / 1)
Jets + blower nozzles	52 + 10
Maximum consumption in low amp - (A) at 230 V	4400 W / 19.1 A

Spa coding with options generated from the table on page 389.

Options:
- ECOSpa
- Audio Bluetooth 4.1
- Nordic Insulation
- Wi-Fi Touch Panel
- Blue Connect Plus

Description	Code
PACIFIC 70 Metallic structure without furniture + Stainless Steel Jets + LumiPlus + Cover	**69130A4320**
PACIFIC 70 Graphite Cabinet + Stainless Steel Jets + Stainless Steel Bar + LumiPlus + Cover	**69130AK332**
PACIFIC 70 Thunder Cabinet + Stainless Steel Jets + Stainless Steel Bar + LumiPlus + Cover	**69130AR332**
PACIFIC 70 Creek Cabinet + Stainless Steel Jets + Stainless Steel Bar + LumiPlus + Cover	**69130AT332**
PACIFIC 70 Butterfly Cabinet + Stainless Steel Jets + Stainless Steel Bar + LumiPlus + Cover	**69130AW332**

Ocean 70 - Code 69863





WHITE (44)
THUNDER CABINET

TECHNICAL SHEET	
Size in cm (± 2cm)	216 x 167 x 74
Positions (Seats / Loungers)	3 (1 / 2)
Jets	42
Maximum consumption in low amp - (A) at 230 V	3280 W / 14.3 A

Spa coding with options generated from the table on page 389.

Options:
- ECOSpa
- Audio Bluetooth 4.1
- Nordic Insulation
- Wi-Fi Touch Panel
- Blue Connect Plus

Description	Code
OCEAN 70 Metallic structure without furniture + Stainless Steel Jets + LumiPlus + Cover	**69863A4320**
OCEAN 70 Graphite Cabinet + Stainless Steel Jets + Stainless Steel Bar + LumiPlus + Cover	**69863AK332**
OCEAN 70 Thunder Cabinet + Stainless Steel Jets + Stainless Steel Bar + LumiPlus + Cover	**69863AR332**
OCEAN 70 Creek Cabinet + Stainless Steel Jets + Stainless Steel Bar + LumiPlus + Cover	**69863AT332**
OCEAN 70 Butterfly Cabinet + Stainless Steel Jets + Stainless Steel Bar + LumiPlus + Cover	**69863AW332**

We reserve the right to change, wholly or partially, the features of our products and the contents of this document, without prior notice

SPA RANGE - ESSENTIAL RANGE

Select E - Code 76894





WHITE COLOUR + THUNDER CABINET

TECHNICAL SHEET	
Size in cm (± 2cm)	216 x 216 x 90
Positions (Seats / Loungers)	6 (5 / 1)
Jets	50
Maximum consumption in low amp - (A) at 230 V	3.780 W / 16.8 A

Spa coding with options generated from the table on page 389.

Options:
- LumiPlus
- ECOSpa
- Audio Bluetooth 2.1

Description	Code
SELECT E Metallic structure without furniture + Stainless steel jets + Cover	**76894A4300**
SELECT E Graphite cabinet + Stainless steel jets + Cover	**76894AP300**
SELECT E Thunder cabinet + Stainless steel jets + Cover	**76894AQ300**

Emotion E - Code 69122





WHITE (44)
THUNDER CABINET

TECHNICAL SHEET	
Size in cm (± 2cm)	216 x 216 x 90
Positions (Seats / Loungers)	5 (3 / 2)
Water Jets	28
Air Jets	16
Maximum consumption in low amp - (A) at 230 V	3.400 W - 14.8 A

Spa coding with options generated from the table on page 389.

Options:
- ECOSpa

Description	Code
EMOTION E Metallic structure without furniture + Stainless steel jets + Cover	**69122A4300**
EMOTION E Graphite cabinet + Stainless steel jets + Cover	**69122AP300**
EMOTION E Thunder cabinet + Stainless steel jets + Cover	**69122AQ300**

We reserve the right to change, wholly or partially, the features of our products and the contents of this document, without prior notice

SPA RANGE - ESSENTIAL RANGE

Equilibre E - Code 73076





WHITE COLOUR +
INFINITY CABINET

TECHNICAL SHEET	
Size in cm (± 2cm)	216 x 167 x 74
Positions (Seats / Loungers)	3 (2 / 1)
Jets	26
Maximum consumption in low amp - (A) at 230 V	3400 W - 14.8 A

Spa coding with options generated from the table on page 389.

Options:
- ECOSpa

Description	Code
EQUILIBRE E Metallic structure without furniture + stainless steel jets + cover	**73076A4300**
EQUILIBRE E Infinity cabinet + stainless steel jets + cover	**73076AC300**

We reserve the right to change, wholly or partially, the features of our products and the contents of this document, without prior notice

SPA RANGE - SWIMSPA RANGE

Swimspa Dual - Code 69126



WHITE (44)
COASTAL GREY CABINET





WHITE (44)
URBAN GREY CABINET

TECHNICAL SHEET	
Size in cm (± 2cm)	575 x 230 x 138
Places (Seats/Loungers) - Swimming area: - Spa area:	 1 Vertical 3 (2 / 1)
Jets - Swimming area: - Spa area:	 37 Jets 15+5 Turbo jets
Max. consumption in low amp - (A) at 230 V	9500 W / 41.3 A

Coding generated with the initial table on page 389.

Options:
- ECOSpa
- Audio Bluetooth 4.1
- Blue Connect Plus

Description	Code
DUAL SWIMSPA Coastal Grey Cabinet + Stainless Steel Jets + LumiPlus + Cover	**69126A1320**
DUAL SWIMSPA Urban Grey Cabinet + Stainless Steel Jets + LumiPlus + Cover	**69126AB320**
DUAL SWIMSPA Metallic structure without furniture + Stainless steel jets + LumiPlus + Cover	**69126A4320**

Swimspa Mediterranea - Code 64414



WHITE (44)
COASTAL GREY CABINET



WHITE (44)
URBAN GREY CABINET





TECHNICAL SHEET	
Size in cm (± 2cm)	500 x 230 x 138
Positions (Seats / Loungers)	3 (2 / 1)
Jets	25 jets + 5 Turbo jets + 3 Fountain jets
Max. consumption in low amp - (A) at 230 V	7.000 W / 30.4 A

Coding generated with the initial table on page 389.

Options:
- ECOSpa
- Audio Bluetooth 4.1
- Blue Connect Plus

Description	Code
MEDITERRANEA SWIMSPA Coastal Grey Cabinet + Stainless Steel jets + LumiPlus + Cover	**64414A1320**
MEDITERRANEA SWIMSPA Urban Grey Cabinet + Stainless Steel jets + LumiPlus + Cover	**64414AB320**
MEDITERRANEA SWIMSPA Metallic structure without furniture + Stainless Steel jets + LumiPlus + Cover	**64414A4320**
MEDITERRANEA SWIMSPA For Kit + Stainless Steel jets + Colour LEDS + Digital Control Panel + Cover	**65353SE311**

Model 65353 must be supplied with the compact kit, code 64972CE001.

We reserve the right to change, wholly or partially, the features of our products and the contents of this document, without prior notice

SPA RANGE - SWIMSPA RANGE

Swimspa Creta - Code 67203



WHITE (44)
COASTAL GREY CABINET





WHITE (44)
URBAN GREY CABINET



TECHNICAL SHEET	
Size in cm (± 2cm)	400 x 230 x 138
Positions (Seats / Loungers)	3 (2 / 1)
Jets	48 jets + 4 Turbo jets
Max. consumption in low amp - (A) at 230 V	7000 W / 30.4 A

Coding generated with the initial table on page 389.

Options:
- ECOSpa
- Audio Bluetooth 4.1
- Blue Connect Plus

Description	Code
CRETA SWIMSPA Coastal Grey Cabinet + Stainless Steel jets + LumiPlus + Cover	**67203A1320**
CRETA SWIMSPA Urban Grey Cabinet + White LumiPlus	**67203AB320**
CRETA SWIMSPA Metallic structure without furniture + Stainless steel jets + LumiPlus + Cover	**67203A4320**
CRETA SWIMSPA For Kit + Stainless Steel jets + Colour LEDS + Digital Control Panel + Cover	**67587SE311**

Model Creta must be supplied with the compact kit, code 64972CE001

Swimspa Compact - Code 69128



WHITE (44)
COASTAL GREY CABINET





WHITE (44)
URBAN GREY CABINET

TECHNICAL SHEET	
Size in cm (± 2cm)	400 x 230 x 138
Positions (Seats / Loungers)	1 Vertical
Jets	18+5 Turbo Jets
Max. consumption in low amp - (A) at 230 V	7000 W / 30.4 A

Coding generated with the initial table on page 389.

Options:
- EcoSpa
- Audio Bluetooth 4.1
- Blue Connect Plus

Description	Code
COMPACT SWIMSPA Coastal Grey Cabinet + Stainless Steel Jets + LumiPlus + Cover	**69128A1320**
COMPACT SWIMSPA Urban Grey Cabinet + White LumiPlus	**69128AB320**
COMPACT SWIMSPA Metallic structure without furniture + Stainless Steel Jets + LumiPlus + Cover	**69128A4320**
COMPACT SWIMSPA For kit + Stainless Steel jets + color LEDS + Digital Control Panel+ Cover	**69129SE311**

Model Compact must be supplied with the compact kit, code 64972CE001

We reserve the right to change, wholly or partially, the features of our products and the contents of this document, without prior notice

IN-GROUND RESIDENTIAL SPAS

Evolution 70 inground - code 49722



WHITE (44)



TECHNICAL SHEET	
Size	216 x 216 x 90
Jets	52+16
Drain	1
Electronic control panel	2
Positions (Seats / Loungers)	5 (3 / 2)
Water Capacity	1.610 l
Empty/full Spa weight	378 Kg / 1.988 Kg
Headrest	3
Cover	Yes
LED Chromotherapy projector	Yes
Jets	Stainless steel
Aromatherapy	No
Cascade	No
Metallic structure	Yes



Description	Code
EVOLUTION 70 Standard + light + digital control panel	**49722SE310**
EVOLUTION 70 Standard + light + digital control panel + cover	**49722SE311**

The spa must be supplied with the filtration kit code 41849CE000

Thalassa E inground - code 78678



WHITE (44)



TECHNICAL SHEET	
Size	216 x 216 x 90
Jets	34
Drain	1
Electronic control panel	Yes
Positions (Seats / Loungers)	6 (5 / 1)
Water Capacity	930 l
Empty/full Spa weight	327 Kg / 1.257 Kg
Headrest	3
Cover	Optional
LED Chromotherapy projector	Yes
Jets	Stainless steel
Cascade	No
Metallic structure	Yes

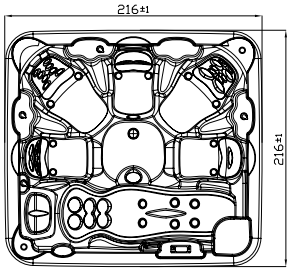

Description	Code
THALASSA E Light + Digital control panel	**78678SE310**
THALASSA E Light + Digital control panel + cover	**78678SE311**

The Spa must be supplied with the filter kit, code 41993CE000 or 41993CE001.
Spa cover sold separately. See section "Spa accessories".

We reserve the right to change, wholly or partially, the features of our products and the contents of this document, without prior notice

IN-GROUND RESIDENTIAL SPAS

Ronda 30 - Code 49859



PEARL CAMEO COLOUR (72)



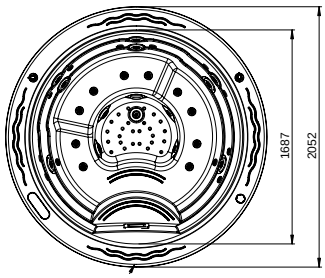

TECHNICAL SHEET	
Size	Ø 205 (± 2 cm)
Jets + nozzles	20 + 10
Drain	1
Digital control panel	Yes
Positions (Seats / Loungers)	5 (5 / 0)
Water Capacity	680 l
Empty/full Spa weight	132 kg - 812 kg
Chromotherapy LED light	Yes
Jets	Stainless steel
Metallic structure	Yes
Cover	Optional

Description	Code
RONDA 30 + Light + Digital control panel	**49859SE310**
RONDA 30 + Light + Digital control panel + Cover	**49859SE311**

The Spa must be supplied with the filter kit. code 41993CE000 or 41993CE001.

Fully fitted with pipe assembly, skimmer, main drain, filtering, hydromassage and blower nozzles, hydromassage digital control buttons and two Venturi inlets. With adjustable bracket for easy installation.

We reserve the right to change, wholly or partially, the features of our products and the contents of this document, without prior notice

COMPACT FILTRATION FOR SPAS

Compact kit for Thalassa, Evolution 70 and Ronda 30



Code	Oxynator	Digital control	Compact weight	Assembly volume	Max. spa volume	Massage pump
41993CE000		•	60 kg	2.05 m³	1000 l	2.2 kW
41993CE001	•	•				

Code	Filter (mm)	Filtration pump	Blower pump	Electric heater	Voltage	Power requirements	Length x width x height
41993	500	0.6 kW 7000 l/h	0.9 kW	3 kW	230 V or 400 V III	3852 W / 16.7 A*	115 x 75 x 105 mm

* Consumption in Low Amp at 230 V.

Compact kit for Evolution 70 inground



Code	Oxynator	Digital control panel	Chromotherapy	Compact weight	Assembly volume	Max. spa volume	Massage pump
41849	Optional	•	•	70 kg	2.05 m³	1610 l	2.2 kW x 2

Compact kit for Swimspa Mediterranea



Code	Oxynator	Digital control panel	Chromotherapy	Compact weight	Assembly volume	Max. spa volume	Massage pump
64972CE001	•	•	•	70 kg	2.05 m³	8500 l	3 x 2.2 kW / 3hp

Code	Filter (mm)	Filtration pump	Electric heater	Voltage	Power requirements	Length x width x height
64972	500	0.6 kW 7000 l/h	3 kW	230 V or 400 V III	7352 W / 31.9 A*	114 x 100 x 112 mm

* Consumption in Low Amp at 230 V.

We reserve the right to change, wholly or partially, the features of our products and the contents of this document, without prior notice

COMPLEMENTS FOR SPAS



Covers for spas

	Code	Standard Pack	Standard Weight in kg	Standard Volume in m³
THALASSA E spa cover	**65977**	1	17	0.40
EVOLUTION 70 inground spa cover	**32690**	1	16	0.36
RONDA 30 spa cover	**51288**	1	15	0.27



Portable spa cover



Cover Stand

Metal Stand for simple handling of the cover.

Code	Standard Pack	Standard Weight in kg	Standard Volume in m³
28462	1	10	0.118

Spa access steps

	Code	Standard Pack	Standard Weight in kg	Standard Volume in m³
Synthetic wood staircase in Graphite	**42002CL0K**	1	15	0.09
Basic staircase coastal grey	**60194**	1	5	0.07
Swimspa staircase	**56918CL01**	1	35	0.59
Synthetic wood staircase in Thunder	**42002CL0R**	1	15	0.09
Synthetic wood staircase in Creek	**42002CL0T**	1	15	0.09
Synthetic wood staircase in Butterfly	**42002CL0W**	1	15	0.09



42002CL0K



60194



56918CL01

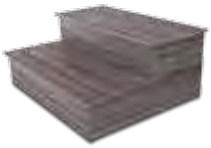

42002CL0R



42002CL0T



42002CL0W

COMPLEMENTS FOR SPAS



Spa parasol in Cameo with LED

	Code	Standard Pack	Standard Weight in kg	Standard Volume in m³
Spa parasol in Cameo with LED	**60220**	2	15	2



Portable spa handrail holder

	Code	Standard Pack	Standard Weight in kg	Standard Volume in m³
Portable spa handrail holder	**60226**	2	8	0.95



Spa filter cartridge cleaner

	Code	Standard Pack	Standard Weight in kg	Standard Volume in m³
Spa filter cartridge cleaner	**60197**	1	2	0.04

LINER ACCESSORIES



2 ½" adjustable jet

Regulates proportion of air-water outlet. 50 mm diameter water inlet and 32 mm air inlet. Flow: 4 m³/hour. Pressure 0.8 a.t.m.

Code	Standard Pack	Standard Weight in kg	Standard Volume in m³
32641	12	7.625	0.028



2" threaded jet

Water inlet diameter of 50 mm and air inlet diameter of 32 mm. Flow rate of 4 m³/hour. Atm pressure of 0.8.

Code	Standard Pack	Standard Weight in kg	Standard Volume in m³
33586	12	7.625	0.028



2" jet thread for liner

Water inlet diameter of 50 mm and air inlet diameter of 32 mm. Flow rate of 4 m³/hour Atm pressure of 0.8.

Code	Standard Pack	Standard Weight in kg	Standard Volume in m³
70532	12	7.625	0.028



2" main drain

With elbow for gluing to Ø 50 mm pipe.

Code	Standard Pack	Standard Weight in kg	Standard Volume in m³
04042	15	4.8	0.028



Adjustable air inlet

1"for air regulation to Venturi system for jet function.

Code	Standard Pack	Standard Weight in kg	Standard Volume in m³
04045	25	6.0	0.028



Adjustable silent air inlet

Silent Venturi for jet air flow control. Air intake is through embedded part. Attaches to air distributor code 33937.

Code	Standard Pack	Standard Weight in kg	Standard Volume in m³
33938	25	8.5	0.028

LINER ACCESSORIES



5 outlet air distributor for Venturi system

5 outlet air distributor for gluing to Venturi system with code 33938. Outlets for clamping a flexible hosepipe of 10 mm inner diameter.

Code	Standard Pack	Standard Weight in kg	Standard Volume in m^3
33937	25	8.5	0.028



6 outlet air distributor for Venturi system

6 outlet air distributor to attach to pipes with a 10 mm inner diameter and glue to 15 mm pipes.

Code	Standard Pack	Standard Weight in kg	Standard Volume in m^3
33936	25	8.5	0.028



10 outlet air distributor

10 outlet air distributor to attach to pipes with a 10 mm inner diameter and glue to 50 mm pipes.

Code	Standard Pack	Standard Weight in kg	Standard Volume in m^3
35346	25	8.5	0.028



4 water outlet manifold

Manifold for gluing to 50 mm pipe, 4 outlets for clamping a hosepipe of 20 mm inner diameter.

Code	Standard Pack	Standard Weight in kg	Standard Volume in m^3
33934	25	8.5	0.028



8 water outlet manifold

Manifold for gluing to 50 mm pipe, 8 outlets for clamping a hosepipe of 20 mm inner diameter.

Code	Standard Pack	Standard Weight in kg	Standard Volume in m^3
33935	25	8.5	0.028



Threaded blower nozzle

For air distribution into the SPA from the blowers. Flow rate 5.4 to 7.5 m^3/h.

	Code	Standard Pack	Standard Weight in kg	Standard Volume in m^3
White plastic front panel	**27602**	80	1.6	0.03
Stainless steel front panel	**43440**	80	1.6	0.03

LINER ACCESSORIES



Blower nozzle for gluing

For air distribution into the SPA from the blowers. Flow rate 5.4 to 7.5 m³/h.

	Code	Standard Pack	Standard Weight in kg	Standard Volume in m³
White plastic front panel	**28460**	80	1.6	0.03
Stainless steel front panel	**43441**	80	1.6	0.03



Blower nozzle lateral outlet 3/8"

For air distribution into the SPA from the blowers. Flow rate 5.4 to 7.5 m³/h.

	Code	Standard Pack	Standard Weight in kg	Standard Volume in m³
White plastic front panel	**34318**	80	1.6	0.03
Stainless steel front panel	**43442**	80	1.6	0.03



2" return unit

For return line and massage.

Code	Standard Pack	Standard Weight in kg	Standard Volume in m³
04034	25	5.0	0.028



Adjustable air impulsion inlet

For air distribution by means of the blowers. Maximum flow rate 18 m³/h.

Code	Standard Pack	Standard Weight in kg	Standard Volume in m³
49818	12	4.24	0.021

09667 **04047**



04048

Pneumatic push button

For starting and stopping massage and hydromassage functions.

	Code	Standard Pack	Standard Weight in kg	Standard Volume in m³
For max. 15 m	**04047**	20	0.5	0.028
For max. 7 m simple	**04048**	40	1.6	0.028
For max. 7 m simple, with thread	**09667**	20	0.5	0.028

Plastic tube

For pneumatic signal from press button to switch. Inner Ø 3.5 mm.

Code	Standard Pack	Standard Weight in kg	Standard Volume in m³
04054	50	3.33	0.006

LINER ACCESSORIES



Rotating jet

Flow rate 2 to 2.5 m³/h.

Code	Standard Pack	Standard Weight in kg	Standard Volume in m³
20297	25	3.33	0.028



Twin rotating jet

Flow rate 2 to 2.5 m³/h.

Code	Standard Pack	Standard Weight in kg	Standard Volume in m³
20296	25	3.83	0.028



Rotating jet housing

Code	Standard Pack	Standard Weight in kg	Standard Volume in m³
20299	15	3.33	0.028



Jet housing for linear pool

Code	Standard Pack	Standard Weight in kg	Standard Volume in m³
63144	12	3.33	0.028



Moveable tube jet nozzle to install in substitution of a fixed one

Compatible with codes 20295 and 20299. Flow rate 2 to 2.5 m³/h.

Code	Standard Pack	Standard Weight in kg	Standard Volume in m³
20298	1	0.8	0.001



2 ½" wall conduit for rotating jet

Made up of: The jet body, 20 cm wall conduit, niche, threaded fitting, front body. Jet not included.
Flow rate 5 m³/h at 1 bar.

Code	Standard Pack	Standard Weight in kg	Standard Volume in m³
20295	4	4	0.018

Stainless steel accessories should not be used in pools with salt electrolysis systems

POOL JET ACCESSORIES

Pool Jet accessories are designed for pools that have a hydromassage section .



Pool Jet 1 Directional Jet

Flow rate 2.4 to 3.6 m³/h. Accessories compatible with 2½" handrail for Pool Jet.

	Code	Standard Pack	Standard Weight in kg	Standard Volume in m³
Stainless steel finish*	**63148**	25	3.83	0.028
White finish	**63149**	25	3.83	0.028



Pool Jet 1 Rotating Jet

Flow rate 2.4 to 3.6 m³/h. Accessories compatible with 2½" handrail for Pool Jet.

	Code	Standard Pack	Standard Weight in kg	Standard Volume in m³
Stainless steel finish*	**63150**	25	3.83	0.028
White finish	**63151**	25	3.83	0.028



Pool Jet 2 Rotating Jets

Flow rate 2.4 to 3.6 m³/h. Accessories compatible with 2½" handrail for Pool Jet.

	Code	Standard Pack	Standard Weight in kg	Standard Volume in m³
Stainless steel finish*	**63152**	25	3.83	0.028
White finish	**63153**	25	3.83	0.028



Pool Jet Rotating Beehive

Flow rate 2.4 to 3.6 m³/h. Accessories compatible with 2½" handrail for Pool Jet.

	Code	Standard Pack	Standard Weight in kg	Standard Volume in m³
Stainless steel finish*	**63154**	25	3.83	0.028
White finish	**63155**	25	3.83	0.028



Wall conduit for Pool Jet

Made up of: The jet Straight body (20 mm Air x 32 mm Water), 20 cm wall conduit, niche, front body. Jet not included.

Code	Standard Pack	Standard Weight in kg	Standard Volume in m³
63146	4	4	0.018

Chrome accessories only suitable for tubs that do not use any chemical treatment. Not suitable for pools.

ACCESSORIES FOR MINISPAS



1 ½" main drain

With elbow for gluing Ø 50 mm pipe.

	Code	Standard Pack	Standard Weight in kg	Standard Volume in m³
Chrome-plated bronze front panel	**04104**	3	7.5	0.028



Adjustable air inlet

¾" to control air massage to Venturi system for jet function

	Code	Standard Pack	Standard Weight in kg	Standard Volume in m³
Chrome-plated bronze front panel	**04108**	10	9.0	0.028
White plastic front panel	**04110**	10	3.0	0.028



Pneumatic push button

For starting and stopping massage and hydromassage functions.

	Code	Standard Pack	Standard Weight in kg	Standard Volume in m³
Chrome-plated bronze front panel	**04111**	10	6.0	0.028
White plastic front panel	**04113**	12	6.0	0.028



Blower Inlet

For minispa air distribution from the blower. 1 ½" thread.

	Code	Standard Pack	Standard Weight in kg	Standard Volume in m³
Chrome-plated bronze front panel	**04114**	20	7.5	0.028



1¼" jet with adaptor to water return

Jet with adaptor to return water to pipe. Also adaptor to connect to water return and air circulation pipe, solvent for inner Ø 32 mm, directional.

	Code	Standard Pack	Standard Weight in kg	Standard Volume in m³
Chrome-plated bronze front panel	**04095**	8	12.0	0.028
White plastic front panel	**04097**	12	12.0	0.028



1¼" jet

With adaptor to connect to return water pipe and Venturi system to glue to Ø 32 mm pipe, directional.

	Code	Standard Pack	Standard Weight in kg	Standard Volume in m³
Chrome-plated bronze front panel	**04092**	8	10.0	0.028
White plastic front panel	**04094**	24	5.0	0.028



1¼" return inlet

	Code	Standard Pack	Standard Weight in kg	Standard Volume in m³
Built in chrome brass	**04100**	4	15.0	0.028
Built in white plastic	**04103**	12	3.5	0.028

ELECTRICAL ACCESSORIES FOR SPAS / MINI SPAS



Programmable digital thermostat

To operate ON/OFF contactor.

Code	Standard Pack	Standard Weight in kg	Standard Volume in m^3
11288	20	0.5	0.003



Electric press button

230 V 50 Hz.

Code	Standard Pack	Standard Weight in kg	Standard Volume in m^3
33387	1	1.5	0.003



Electropneumatic equipment

With two switches. Up to 1.47 kW (2HP).

Code	Standard Pack	Standard Weight in kg	Standard Volume in m^3
04053	2	4.0	0.028



Pneumatic switch

For starting and stopping massage and hydromassage functions.

	Code	Standard Pack	Standard Weight in kg	Standard Volume in m^3
Pneumatic switch	**04050**	25	1.0	0.028
Pneumatic switch and presostat	**11290**	6	0.5	0.028
Pneumatic presostat	**11291**	12	1.0	0.028

AIR BLOWERS



Continuous operation lateral turbo blower pump

Air pump designed for spas, hydromassage tubs and similar which produces a constant stream of air bubbles at medium and high air volume levels. It can also be used to stir up the filter bed, for example in backwash cycles where a low intensity air current is required. The filter casing and impeller are made from an injected aluminium alloy whilst the motor spindle is manufactured from stainless steel, with the impeller dynamically balanced and directly adapted to the spindle. The motors, 2 single phase or 3 phase for continuous use, are made from steel in compliance with CEI 2/3 1988 regulations, and feature IP54 external protection and class-F insulation. The pumps can be mounted horizontally or vertically. Moreover, since there is no contact between the mobile parts and the pump static discharges, neither lubrication nor maintenance is necessary and it also doesn't cause wear on the parts.

The turbines have a maximum working temperature of 40ºC. Do not use in conjunction with aggressive, inflammable or explosive gases.

Model	Code	Frequency (Hz)	Power supply (V)	Phase	Flow rate (m^3/h)	Maximum pressure (mbar)	Standard weight (kg)	Standard volume (m^3)
Blower 0.4 kW	**33970**	50	Δ 200-240 Y 345-415	3	80	130	10	0.045
Blower 0.5 kW		60	Δ 220-275 Y 380-480	3	98	170		
Blower 0.85 kW	**35388**	50	200-240	1	145	160	17	0.059
Blower 0.95 kW		60	200-240	1	175	160		
Blower 0.85 kW	**35387**	50	Δ 200-240 Y 345-415	3	145	160	16	0.045
Blower 0.95 kW		60	Δ 220-275 Y 380-480	3	175	160		
Blower 1.3 kW	**31090**	50	200-240	1	210	170	23	0.059
Blower 1.5 kW		60	200-240	1	255	140		
Blower 1.3 kW	**31091**	50	Δ 200-240 Y 345-415	3	210	170	22	0.059
Blower 1.5 kW		60	Δ 220-275 Y 380-480	3	255	140		
Blower 1.5 kW	**33971**	50	200-240	1	210	220	24	0.064
Blower 1.75 kW		60	200-240	1	255	220		
Blower 1.6 kW	**31092**	50	Δ 200-240 Y 345-415	3	210	220	23	0.064
Blower 2.1 kW		60	Δ 220-275 Y 380-480	3	255	220		
Blower 1.6 kW 2V	**35389**	50	Δ 200-240 Y 345-415	3	150	300	25	0.087
Blower 2.06 kW 2V		60	Δ 220-275 Y 380-480	3	180	310		
Blower 2.2 kW	**31093**	50	Δ 200-240 Y 345-415	3	318	230	30	0.097
Blower 2.55 kW		60	Δ 220-275 Y 380-480	3	376	220		
Blower 3.0 kW 2V	**31094**	50	Δ 200-240 Y 345-415	3	230	410	40	0.126
Blower 3.45 kW 2V		60	Δ 220-275 Y 380-480	3	275	400		
Blower 3.0 kW	**31095**	50	Δ 200-240 Y 345-415	3	318	280	36	0.097
Blower 3.45 kW		60	Δ 220-275 Y 380-480	3	376	280		
Blower 4.3 kW 2V	**31096**	50	Δ 345-415 Y 600-720	3	520	600	54	0.217
Blower 4.8 kW 2V		60	Δ 380-480 Y 660-720	3	385	320		
Blower 5.5 kW	**31097**	50	Δ 345-415 Y 600-720	3	530	320	63	0.16
Blower 6.3 kW		60	Δ 380-480 Y 660-720	3	620	340		
Blower 5.5 kW 2V	**33972**	50	Δ 345-415 Y 600-720	3	320	515	66	0.201
Blower 6.3 kW 2V		60	Δ 380-480 Y 660-720	3	385	530		
Blower 7.5 kW	**31098**	50	Δ 345-415 Y 600-720	3	530	400	66	0.16
Blower 8.6 kW		60	Δ 380-480 Y 660-720	3	620	400		
Blower 11 kW 2V	**33973**	50	Δ 345-415 Y 600-720	3	520	600	104	0.353
Blower 12.6 kW 2V		60	Δ 380-480 Y 660-720	3	620	600		
Blower 12.5 kW	**33974**	50	Δ 345-415 Y 600-720	3	1050	270	116	0.353
Blower 14.5 kW		60	Δ 380-480 Y 660-720	3	1250	260		



Intermittent operation air blower, 900 W

	Code	Standard Pack	Standard Weight in kg	Standard Volume in m^3
0.90 kW flow 54 m^3/h at 1.5 m water head	**19289**	1	3.5	0.028

AIR BLOWERS



Water pump

ABS (25%) and fibreglass (75%) housing. A 0.37 kW (0.5 hp) motor. IP-55 electrical connection rating of 24 V 220 V 1~ 50Hz . 2" male suction connection. 1½" male return connection.

TECHNICAL DETAILS

Water head	m³/h
2	16.5
4	14.8
6	12.6
8	10
10	7

	Code	Standard Pack	Standard Weight in kg	Standard Volume in m³
	04091	1	6.0	0.016



Intermittent operation air blower

	Code	Standard Pack	Standard Weight in kg	Standard Volume in m³
0.74 kW, Flow 65 m³/h at 1 m water head	**06862**	1	3.5	0.028
1.10 kW, Flow 133 m³/h at 1 m water head	**06863**	1	3.5	0.028





Cala Pump

Centrifugal pump for spas, backwashes and other applications.

- Pump body manufactured in polypropylene reinforced with fibreglass, resistant to pool chemical products thus guaranteeing long and excellent duration.
- Turbine in Noryl.
- Graphite and ceramic mechanical seal.
- AISI 316L stainless steel motor spindle.
- Enclosed motor, completely silent, with IP-55 protection at 2850 r.p.m. Single phase power voltage at 230V-50Hz or triphase at 230/400-50Hz.
- Versions from 1.5 to 4.5 HP.
- Suction and return connections for gluing hoses included with the pump.
- Suction and return at Ø63.

	Code	Standard Pack	Standard Weight in kg	Standard Volume in m³
Single phase 1.1 kW Cala Pump	**CA150M**	1	15.0	0.058
Tri phase 1.1 kW Cala Pump	**CA150T**	1	15.0	0.058
Single phase 1.5 kW Cala Pump	**CA200M**	1	16.5	0.058
Tri phase 1.5 kW Cala Pump	**CA200T**	1	16.5	0.058
Single phase 2.2 kW Cala Pump	**CA300M**	1	19.5	0.058
Tri phase 2.2 kW Cala Pump	**CA300T**	1	19.5	0.058
Single phase 2.9 kW Cala Pump	**CA400M**	1	22.5	0.058
Tri phase 3.3 kW Cala Pump	**CA450T**	1	22.5	0.058

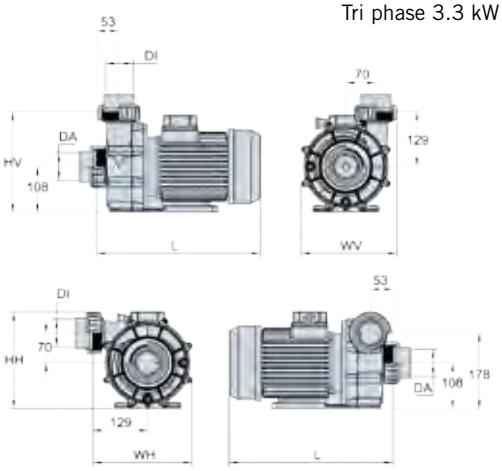

Code	Power		Size						
	kW	HP	L	WV	HV	WH	HH	DA	DI
CA150M	1.1	1.5	350	225	237	235	228	Ø63	Ø63
CA150T									
CA200M	1.5	2.0	365	225	237	235	228	Ø63	Ø63
CA200T									
CA300M	2.2	3.0	385	225	237	235	228	Ø63	Ø63
CA300T									
CA400M	2.9	4.0	415	225	237	235	228	Ø63	Ø63
CA450T	3.3	4.5							

The sauna pictures do not show the standard product (some accessories can be included from table **Accessories Summary**).

Please note the codes of the accessories when ordering.

SAUNAS

The benefits of an AstralPool sauna range from muscle relaxation to sweat stimulation thanks to their hot and dry environment (relative humidity between 20% and 50%). AstralPool saunas are made from prefabricated panels with interior insulation in mineral wool and aluminium. The wall coating is covered with pre-treated wood that has been fired and dried to last for many years.



2 seats, code 70470-70471

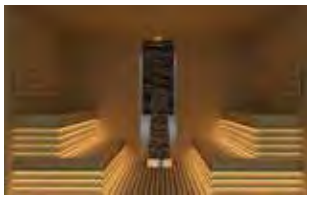

4 seats, code 70439-70442

The Miramonte sauna can be made to order in the following woods: spruce, thermo Aspen, Canadian spruce and red cedar.

Miramonte sauna

Miramonte sauna reflects the excellence of a Finnish sauna formed of high-quality white pinewood vertical panels and abachi timber flooring. The entire front panel of the Miramonte sauna is glazed to showcase the LED lighting inside. Also includes 2 benches with abachi headrests and a heater adapted to each size.

Code	Type	Dimensions (cm)	Heating (kW)	Control unit
70470	Miramonte sauna	200 x 150 x 210	7 kW 230/400V 3~	Touchscreen / Exterior
70471	Miramonte sauna	200 x 200 x 210	7 kW 230/400V 3~	Touchscreen / Exterior
70439	Miramonte sauna	250 x 200 x 210	9 kW 230/400V 3~	Touchscreen / Exterior
70440	Miramonte sauna	250 x 250 x 210	9 kW 230/400V 3~	Touchscreen / Exterior
70441	Miramonte sauna	300 x 250 x 210	10.8 kW 230/400V 3~	Touchscreen / Exterior
70442	Miramonte sauna	300 x 300 x 210	13.5 kW 230/400V 3~	Touchscreen / Exterior

Accessories	Code	Unit	Weight kg Standard	Volume in m^3 Standard
Stainless steel accessories set	**70443**	un.	-	-
Set of decorative salt elements	**70444**	un.	-	-
Outside wall finished with vertical timber panels	**70447**	metre length	-	-
Stone-based decorative wall protection	**70456**	un.	-	-
Remote control kit for RGB colours	**70457**	un.	-	-



The Classic sauna can be made to order in the following woods: white pine, thermo Aspen, Canadian spruce and red cedar.

Optional: glass panel follow-on from door.

Classic Select sauna

The Classic sauna is designed with vertical panels and spruce wood flooring. It has a timber-framed glass door, two seats with a backrest against the wall and an abachi headrest. Includes: Wooden accessories kit, ergonomic seating, rounded backrest, heater with premium protection.

Code	Type	Dimensions (cm)	Heating (kW)	Control unit
70431	Classic sauna	150 x 150 x 210	4.5kW 230/400 3~	Exterior
70432	Classic sauna	200 x 150 x 210	6kW 230/400 3~	Exterior
70433	Classic sauna	200 x 200 x 210	6kW 230/400 3~	Exterior
70455	Classic sauna	250 x 200 x 210	8kW 230/400 3~	Exterior
70434	Classic sauna	250 x 250 x 210	9kW 230/400 3~	Exterior
70436	Classic sauna	300 x 250 x 210	10.5kW 230/400 3~	Exterior
70437	Classic sauna	300 x 300 x 210	13.5kW 230/400 3~	Exterior
70438	Classic sauna	400 x 300 x 210	16.5kW 230/400 3~	Exterior

Accessories	Code	Unit	Weight kg Standard	Volume in m^3 Standard
Stainless steel accessories set	**70443**	un.	-	-
Set of decorative salt elements	**70444**	un.	-	-
Remote control kit for RGB LED colours	**70445**	un.	-	-
Touchscreen control unit for sauna heater	**70446**	un.	-	-
Outside wall finished with vertical timber panels	**70447**	metre length	-	-
Roof extension	**70448**	m^2	-	-
Tinted/transparent glass window	**70449**	m^2	-	-
Concealed heater for sauna up to 300 x 250 cm	**70450**	un.	-	-
Concealed heater for sauna more than 300 x 250 cm	**70451**	un.	-	-
Extra wall for concealed heater	**70452**	metre length	-	-
Aroma dosing system	**70453**	un.	-	-

SAUNAS



The St. Moritz sauna can be made to order in the following woods:
- Standard wood: Hemlock Playwood
- Bench wood: Abichi



St. Moritz sauna

- Hemlock playwood panels 14 mm.
- Console benches and backrest of Abichi 21 mm.
- Secured transparent glass 8 mm.
- Wall mounted Harvia sauna heater.
- Outfoor touch control panel.
- Led light Warm White 3000 K.

Code	Dimensions (cm)	Light	Control Unit	Heater
72908	180 x 180 x 210	Led White / RGB	Touchscreen Exterior	6 kW 230 / 400 3~
72909	220 x 220 x 210	Led White / RGB	Touchscreen Exterior	8 kW 230 / 400 3~
72910	260 x 220 x 210	Led White / RGB	Touchscreen Exterior	9 kW 230 / 400 3~
72911	300 x 250 x 210	Led White / RGB	Touchscreen Exterior	10.5 kW 230 / 400 3~

Accessories	Code	Standard Pack	Standard Weight in kg	Standard Volume in m^3
Stainless steel accessories set	**70443**	un.	-	-
RGB Led lighting kit with remote control	**70445**	un.	-	-
Salt decorative elements set	**70444**	lin.m	-	-
Hidden heater	**70450**	un.	-	-
Additional Wall for hidden heater	**70452**	lin.m	-	-



The Innsbruck sauna can be made to order in the following woods:
- Standard wood: Hemlock Playwood
- Bench wood: Abichi

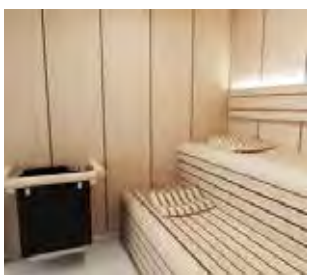

Innsbruck sauna

- Hemlock playwood panels 14 mm.
- Ergonomic benches and backrest of Abichi 21 mm.
- Secured transparent glass 8 mm.
- Wall mounted Harvia sauna heater.
- Outfoor touch control panel.
- Led light Warm White 3000 K.
- Ceiling led light with optional chromotherapy.

Code	Dimensions (cm)	Light	Control Unit	Heater
72901 New	135 x 135 x 210	Led White / RGB	Touchscreen Exterior	6 kW 230 / 400 3~
72902	180 x 180 x 210	Led White / RGB	Touchscreen Exterior	6 kW 230 / 400 3~
72903	220 x 220 x 210	Led White / RGB	Touchscreen Exterior	8 kW 230 / 400 3~
72904	260 x 220 x 210	Led White / RGB	Touchscreen Exterior	9 kW 230 / 400 3~
72905	300 x 250 x 210	Led White / RGB	Touchscreen Exterior	10.5 kW 230 / 400 3~

Accessories	Code	Unit	Weight kg Standard	Volume in m^3 Standard
Stainless steel accessories set	**70443**	un.	-	-
RGB Led lighting kit with remote control	**70445**	un.	-	-
Outside Wall finished with vertical playwood panels	**To consult**	lin.m	-	-
Salt decorative elements set	**To consult**	un.	-	-
Hidden heater	**To consult**	un.	-	-
Additional Wall for hidden heater	**To consult**	lin.m		

SAUNAS



The Bella sauna can be made to order in the following woods:
- Standard wood: Hemlock Playwood
- Bench wood: Thermo Aspen



Bella sauna

- Hemlock playwood panels 14 mm.
- Curved decorative elements of Thermo Aspen 21 mm.
- Benches of thermos Aspen 21 mm.
- Secured transparent glass 8 mm.
- Harvia design sauna heater.
- Outdoor touch control panel.
- Aromatherapy/Salt Metal Bowl.
- Led light warm white 3000 K.
- Option for glass ceiling.

Code	Dimensions (cm)	Light	Control Unit	Heater
72916	180 x 180 x 210	Led White / RGB	Touchscreen Exterior	6.9 kW 230 / 400 3~
72917	230 x 180 x 210	Led White / RGB	Touchscreen Exterior	6.9 kW 230 / 400 3~
72918	230 x 230 x 210	Led White / RGB	Touchscreen Exterior	10.5 kW 230 / 400 3~
72919	280 x 230 x 210	Led White / RGB	Touchscreen Exterior	10.5 kW 230 / 400 3~

Accessories	Code	Standard Pack	Standard Weight in kg	Standard Volume in m^3
Stainless steel accessories set	**70443**	un.	-	-
RGB Led lighting kit with remote control	**70445**	un.	-	-
Outside wall finished with vertical playwood panels	**To consult**	lin.m	-	-
Glass roof panel	**To consult**	sq.m	-	-
Heater safety railing	**To consult**	un.	-	-



The Lobos sauna can be made to order in the following woods:
- Standard wood: Hemlock Playwood
- Bench wood: Abichi

Lobos sauna

- Hemlock playwood panels 14 mm.
- Benches of Abachi 21 mm.
- Secured transparent glass 8 mm.
- Exclusive Harvia sauna heater.
- Outfoor touch control panel.
- Led light Warm White 3000 K.

Code	Dimensions (cm)	Light	Control Unit	Heater
72913	134 x 254 x 210	Led White / RGB	Touchscreen Exterior	6 kW 230 / 400 3~
72914	194 x 195 x 210	Led White / RGB	Touchscreen Exterior	8 kW 230 / 400 3~
72915	254 x 254 x 210	Led White / RGB	Touchscreen Exterior	9 kW 230 / 400 3~

Accessories	Code	Standard Pack	Standard Weight in kg	Standard Volume in m^3
Stainless steel accessories set	**70443**	un.	-	-
Salt decorative elements set	**70444**	un.	-	-
Remote control kit for RGB LED colours	**70445**	un.	-	-
Outside wall finished with vertical timber panels	**70447**	lin.m	-	-
Roof extension	**70448**	sq.m	-	-
Tintes/transparent glass window	**70449**	sq.m	-	-

ACCESSORIES - SAUNAS

Sauna accessories

Code	Accessory type	Measure	CLASSIC	MIRAMONTE	INNSBRUCK	ST.MORITZ	LOBOS	BELLA
70443	Stainless steel sauna accessories set	un.	optional	optional	optional	optional	optional	optional
70444	Salt decorative elements set	un.	optional	optional	optional	optional	optional	N/A
70445	RGB Led lighting kit with remote control	un.	optional	optional	optional	optional	optional	optional
70446	Touchscreen control unit for sauna heater	un.	optional	Standard	Standard	Standard	Standard	Standard
70447	Outside wall finished with vertical timber panels	lin.m.	optional	optional	optional	optional	optional	optional
70448	Roof extension	sq.m.	optional	optional	optional	optional	optional	optional
70449	Tintes / transparent glass window	sq.m.	optional	optional	optional	optional	optional	optional
70450	Concealed heater for sauna up to 300 x 250 cm	un.	optional	optional	optional	optional	optional	N/A
70451	Concealed heater for sauna more than 300 x 250 cm	un.	optional	optional	optional	optional	optional	N/A
70452	Additional wall for hidden heater	lin.m.	optional	optional	optional	optional	optional	N/A
70453	Aroma dosing system	un.	optional	optional	optional	optional	optional	optional
70456	Decorative wall protection made of stones	un.	optional	optional	optional	optional	optional	N/A
70457	RGB Chromo therapy kit with remote control	un.	optional	optional	optional	optional	optional	N/A
Request	2nd full glass side	sq.m.	N/A	N/A	N/A	N/A	optional	optional
Request	Glass roof panel	sq.m.	optional	optional	optional	optional	optional	optional
Request	Heater safety railing	un.	Standard	optional	Standard	Standard	Standard	optional

Standard: Included with sauna code.
Optional: Additional code.
N/A: Not available.



70443



70444



70446



70447



70450
70451



70453



70456



70457



2nd full glass side



Heater safety railing

ACCESSORIES - SAUNAS



Harvia Helix steam generators

Includes control panel and temperature sensor.

	Code	Standard Pack	Standard Weight in kg	Standard Volume in m³
Steam generator Helix 4.5 kW	**61400**	1	-	-
Steam generator Harvia Helix 6 kW	**61401**	1	-	-
Steam generator Harvia Helix 9 kW	**61402**	1	-	-
Steam generator Harvia Helix 11 kW	**60327**	1	-	-
Steam generator Harvia Helix 15 kW	**61403**	1	-	-

Harvia Helix Pro steam generators

Includes control panel, temperature sensor, automatic discharge valve and fragrance pump.

	Code	Standard Pack	Standard Weight in kg	Standard Volume in m³
Steam generator Harvia Helix Pro 22 kW	**61404**	1	-	-
Steam generator Harvia Helix Pro 30 kW	**61405**	1	-	-
Auto Clean Valve Harvia	**60328**	1	-	-



Steam Pack

The new generation of Steam room equipment. Single unit with metal structure. Compact design. Easy and simple installation.

Description	Heating (kW)
Steam pack for room 2-5 m³	4.5 kW 230/400V 3~
Steam pack for room 3-8 m³	5.7 kW 230/400V 3~
Steam pack for room 6-12 m³	9 kW 230/400V 3~
Steam pack for room 10-15 m³	10.8 kW 230/400V 3~
Steam pack for room 12-20 m³	15 kW 230/400V 3~
Steam pack for room 20-29 m³	22 kW 230/400V 3~
Steam pack for room 20-29 m³	30 kW 230/400V 3~



Harvia Vega sauna heater

Stones included.

	Code	Standard Pack	Standard Weight in kg	Standard Volume in m³
Harvia Vega sauna heater 4.5 kW	**61387**	1	-	-
Harvia Vega sauna heater 4.5 kW E	**61388**	1	-	-
Harvia Vega sauna heater 6 kW	**61389**	1	-	-
Harvia Vega sauna heater 6 kW E	**61390**	1	-	-
Harvia Vega sauna heater 8 kW	**60323**	1	-	-
Harvia Vega sauna heater 8 kW E	**60325**	1	-	-
Harvia Vega sauna heater 9 kW	**60324**	1	-	-
Harvia Vega sauna heater 9 kW E	**60326**	1	-	-



Xenio Control

New

Harvia Xenio is a control unit with a touch control panel. Xenio provides a modern and subtly stylish user interface for controlling the heart of the sauna, the heater. The stylishly small yet clear touch control panel is easy to install where you want it: in the sauna, the shower room, the dressing room, or even the living room. The control panel enables you to see with just one look when your sauna is at the right temperature for you.

- **XENIO 110 máx. for 11kW electric heathers**
- **XENIO 170 for up to 17 kW heaters**





HEATING AND DEHUMIDIFICATION

424 • Swimming pool heating solutions
428 • Climate zones
429 • Heating sizing help tables
434 • Air-water heat pumps for outdoor installation
438 • Air-water heat pumps for indoor installation
440 • Water-air chillers for indoor or outdoor installation
441 • Electric heaters
442 • Water-water exchanger
444 • Water-water plate heat exchanger
445 • Dehumidifiers

New app:

AstralPool Toolbox

Download this new app to check which heat pump and dehumidifier best adapt to your pool.

SWIMMING POOL HEATING SOLUTIONS

Equipping a pool with a heating solution means freedom from the vagaries of the weather and extending its use period. Heat pumps, electric heaters, heat exchangers - the AstralPool® product range allows everyone to enjoy water at a constant ideal temperature.

Parameters for choosing a heating system

To define a system suitable for a pool, you need to know its volume (in m^3), the desired use period and estimate the temperature (in °C) the water in the pool should reach.

These simple parameters will enable you to size the heating system correctly and will guarantee you maximum comfort at a lower cost.

The choice of heating equipment also depends on the energy source that will be used.

COMPARATIVE TABLE OF RANGES

	Heat pumps	Electric heaters	Heat exchangers
			
SOLUTION	Stand-alone, dedicated to the pool	Stand-alone, dedicated to the pool	Coupled to the domestic heating
ENERGY USED	Renewable	Electricity	Domestic heating source (gas, oil, electricity, renewable, etc.)
RUNNING COST	€	€€€	€ to €€€
INVESTMENT	€€	€	€
ADVANTAGES	Energy efficient Low operating cost	Simple installation Rapid temperature increase	Rapid temperature increase (if gas/oil boiler) Compatible with all heating systems
USES	All open air or indoor pools	Spas and pools used at weekends or holiday homes	Indoor and outdoor pools close to the boiler in the house

What type of defrosting?

When the outside temperature is low, the evaporator will tend to ice up, which reduces its efficiency: this ice must therefore be removed. There are 2 types of defrosting:

- **Defrosting by ventilation or economical defrosting**

  The cooling circuit is stopped for a few minutes. Only the fan operates, forcing outside air to defrost naturally.
  This type of defrosting will work well for a seasonal use.

- **Defrosting by cycle inversion or intensive defrosting**

  The cooling circuit is reversed: calories from the pool water are used to defrost the evaporator. This defrost type allows operation at lower temperatures.

SWIMMING POOL HEATING SOLUTIONS

How is the performance of heat pumps compared?

To compare the performance of different heat pumps, it is essential to compare power supplied and performance coefficient.
Two main values characterise the performance of heat pumps: their power and their performance coefficient.

- **Power**, expressed in kW, indicates the quantity of heat transferred to the water.

  It varies depending on three conditions to which the heat pump is exposed during use: temperature of the outside air, humidity of the outside air and temperature of the water in the pool.

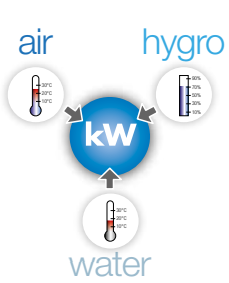

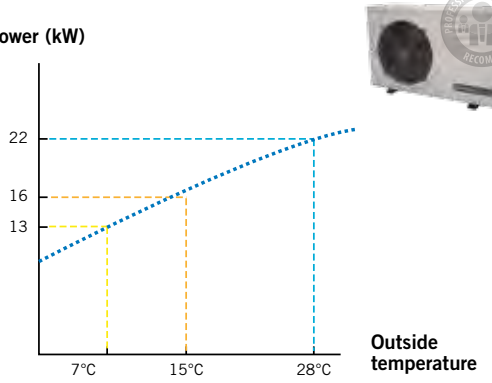

- **The coefficient of performance (COP)** is the ratio between the power supplied to the water in the pool and the power consumption of the heat pump.

  As an example, a performance coefficient of 4 means that for 1 kWh consumed at the electricity meter, the heat supplies 4 times more energy to the water in the pool, or 4 kWh.

  So the higher the performance coefficient, the more efficient the system.

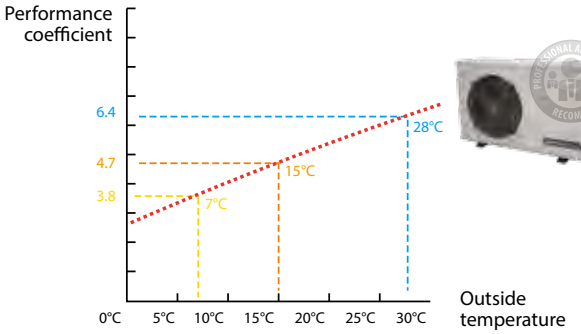

Recommendations for installing a swimming pool heat pump

A heat pump system includes 'moving' parts (compressor, fan, etc.), vibrations from which can spread and build up.

To avoid or reduce disturbances, a few installation rules should be followed:

- Favour open spaces (avoid corners or interior courtyards), because sound waves coming from all sides of the system are reflected by the surfaces facing them.
- Do not install the system below or facing a window.
- Relative to neighbouring properties:
  - Install the system as far as possible from property boundaries.
  - The fan should not point towards neighbouring properties.

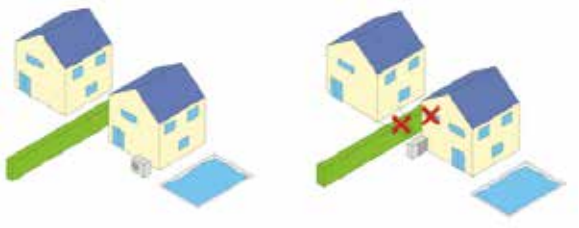

SWIMMING POOL HEATING SOLUTIONS

Full Inverter technology

Inverter technology enables a heat pump to change its power mode depending on the temperature of the pool water and the weather conditions. It therefore runs to achieve the best energy efficiency at the lowest noise level.

3 operating modes:

1. Silent: **Ideal to maintain the temperature or at night time**

- Heat Pump runs at low power setting
- Compressor operates on low speed ranges to minimize energy consumption
- Lowest noise and highest COP

2. Smart: **Normal use**

- Compressor operates smartly from low to high speed ranges
- Reduced noise and energy consumption

3. Powerful: **Ideal to begin the season or to operate in cold conditions**

- Heat Pump runs at high power setting
- Compressor operates on high speed ranges to heat the pool faster
- Maximum heating power

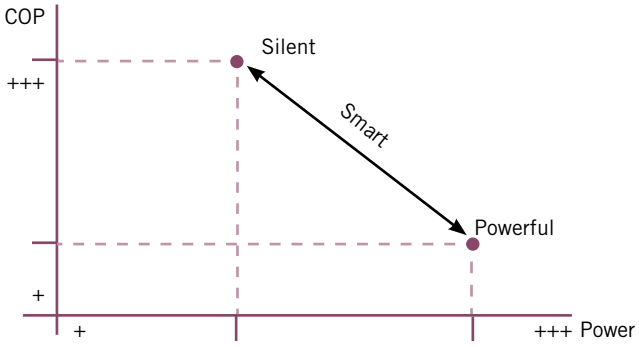

Vertical blowing

Vertical air blowing is typically suitable for small spaces as a reduced free area is required around the unit.

Automatic heat / cool mode

The heat pump will switch automatically from heat to cool mode to stabilize the temperature at the desired target.

Soft starter

When no inverter, for high power units, the soft starter will prevent peak currents when the Heat Pump starts, thus avoiding the main fuse/breaker to trip and ensuring the viability of components.

SWIMMING POOL HEATING SOLUTIONS

Heat pumps

Heat pumps offer a solution that is both ecological and easy to install, all with highly competitive running costs.
As thermodynamic devices, they transfer the calories (heat) present in the air to the pool water, for reduced energy consumption.
AstralPool® range is available in several models to suit all types of pool.

Heat Pumps for private pools and public pools.

COMPARATIVE TABLE OF HEAT PUMPS

	EVOLINE	APH3	PROELYO	PROHEAT II: STANDARD & CHILLER	PROHEAT II: INDOOR	MAYA	OPTIMA	ALASKA SIBERIA
								
Application	Residential	Residential	Residential	Large public pools	Large public pools	Residential	Residential	Residential
Energy efficiency	++	+++	+++	++	++	++	++	++
Acoustics	++	+++	+++	++	++	++	++	++
Compact size	++	+++	++	+	+	++	+	++
Minimum operating T°	0°C	-20°C	-20°C	0°C	0°C	+5°C	+5°C	+5°C
Reversible operation to cool the pool	•	•	•	• (Chiller models)				These machines are chillers. It's the only valid operation mode
Heating priority (filtration pump control)	•	•	•	•	•	•	•	•
Can be installed in a control room*					•	•		• (Siberia models only)

CLIMATE ZONES

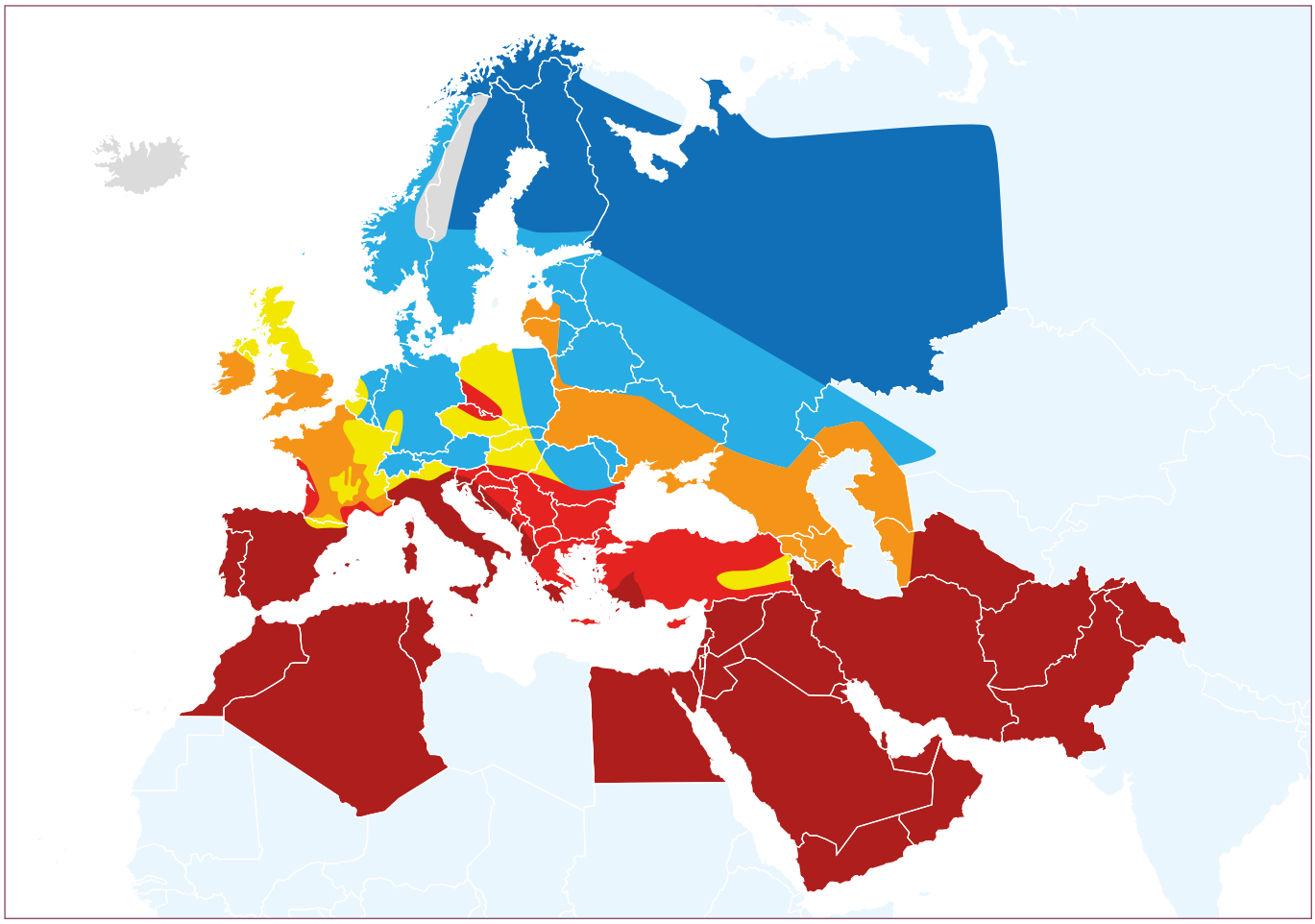

South africa

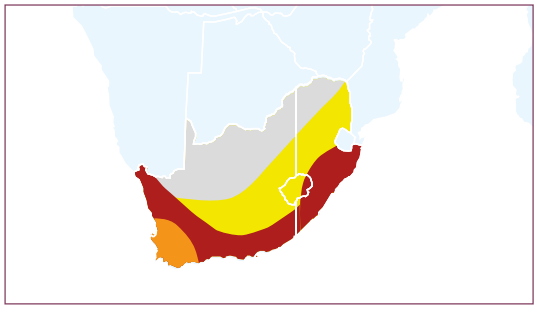

Australia

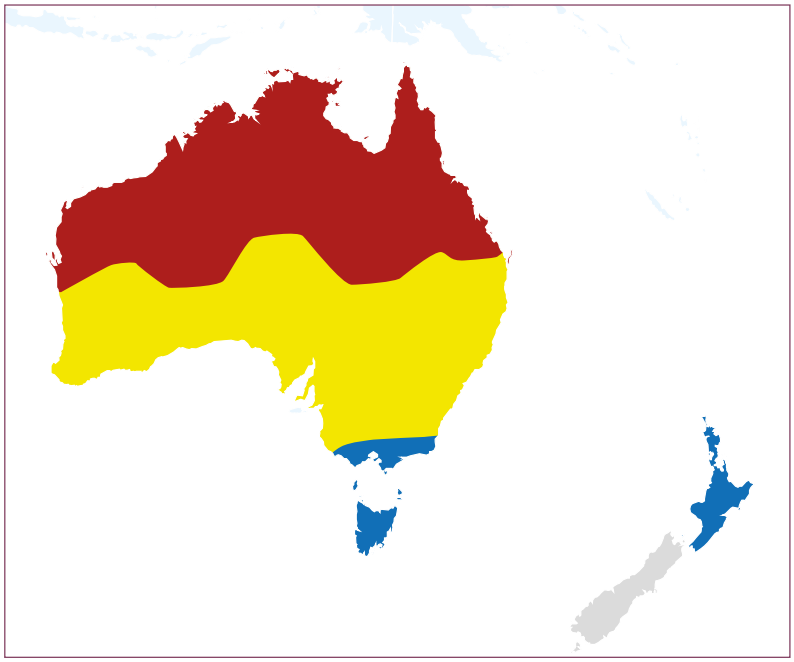

Zone 1
Zone 2
Zone 3
Zone 4
Zone 5
Zone 6
Zone 7

Caribbean Islands, Reunion Island, Canary Islands are part of Zone 7.

HEATING SIZING HELP TABLES

How to select a heating system adapted to pool environments?

Fluidra has built the below sizing tables to quickly and easily select the convenient heating system.

They are quick sizing tables, given for a private pool, from 15 may to 15 september, depth 1,5m, with a maximum temperature rise time of 4 days to heat the pool from 15°C to 28°C, 14h filtration time.

To get a customized sizing, please consult the web configurators:

NEW CONFIGURATORS ARE AVAILABLE FOR MORE ACCURATE SIZINGS!

For professional use, visit our configurator on **www.pro.fluidra.com**

For public use, visit our simplified configurator on **www.astralpool.com**

How to read them?

Within APH3 range, the appropriate model for a pool of 35 m³ located in zone 2 is APH3-17kW.

APH3

Pool Volume (m³)	0	5	10	15	20	25	30	35	40	45	50	55	60	65	70	75	80	85	90	95	100	105	110	115	120	125	130	135	140	145	150	155	160
With cover	14kW														17kW				21kW							26kW								
Zone 7																																	
Zone 6																																	
Zone 5																																	
Zone 4																																	
Zone 3																																	
Zone 2																																	
Zone 1																																	
Pool Volume (m³)	0	5	10	15	20	25	30	35	40	45	50	55	60	65	70	75	80	85	90	95	100	105	110	115	120	125	130	135	140	145	150	155	160
Without cover	14kW							17kW				21kW			26kW																		
Zone 7																																	
Zone 6																																	
Zone 5																																	
Zone 4																																	
Zone 3																																	
Zone 2																																	
Zone 1																																	

PROELYO TOUCH

Pool Volume (m³)	0	5	10	15	20	25	30	35	40	45	50	55	60	65	70	75	80	85	90	95	100	105	110	115	120	125	130	135	140	145	150	155	160
With cover	PET-08											PET-10			PET-13			PET-15		PET-19			PET-25			PET-30/30T					PET-35/35T		
Zone 7																																	
Zone 6																																	
Zone 5																																	
Zone 4																																	
Zone 3																																	
Zone 2																																	
Zone 1																																	
Pool Volume (m³)	0	5	10	15	20	25	30	35	40	45	50	55	60	65	70	75	80	85	90	95	100	105	110	115	120	125	130	135	140	145	150	155	160
Without cover	PET-08		PET-10		PET-13			PET-15			PET-19			PET-25			PET-30/30T			PET-35/35T												
Zone 7																																	
Zone 6																																	
Zone 5																																	
Zone 4																																	
Zone 3																																	
Zone 2																																	
Zone 1																																	

HEATING SIZING HELP TABLES

EVOLINE

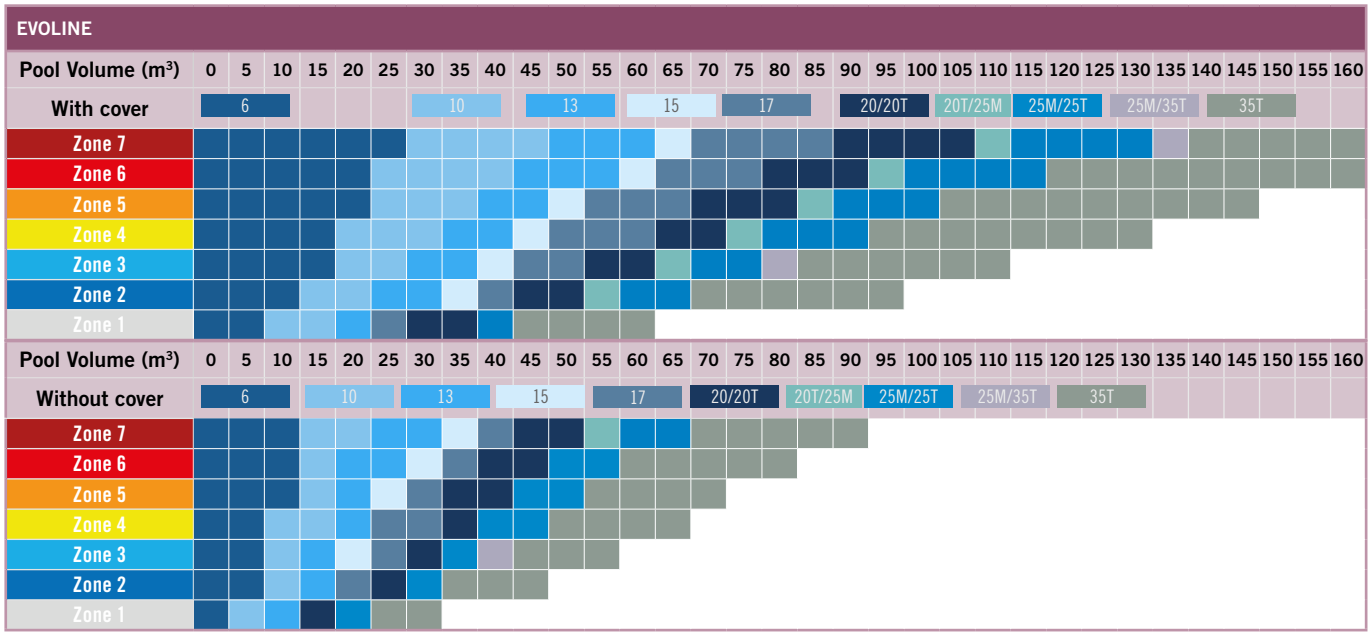

MAYA

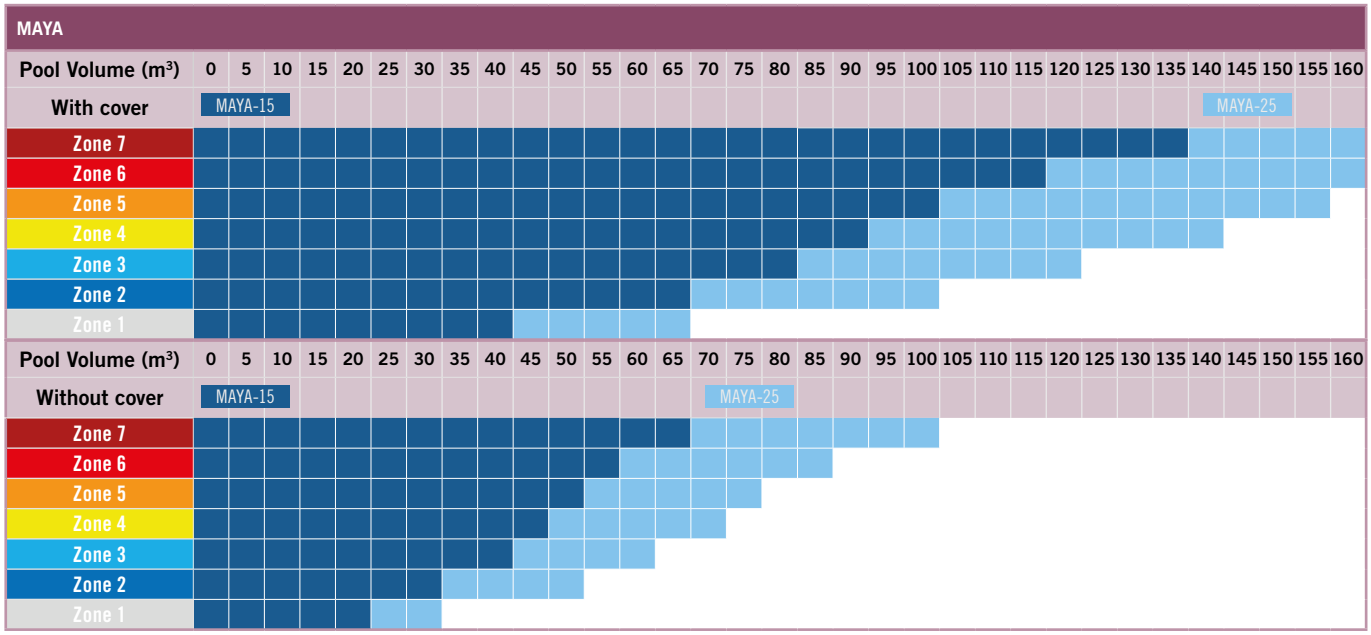

HEATING SIZING HELP TABLES

OPTIMA

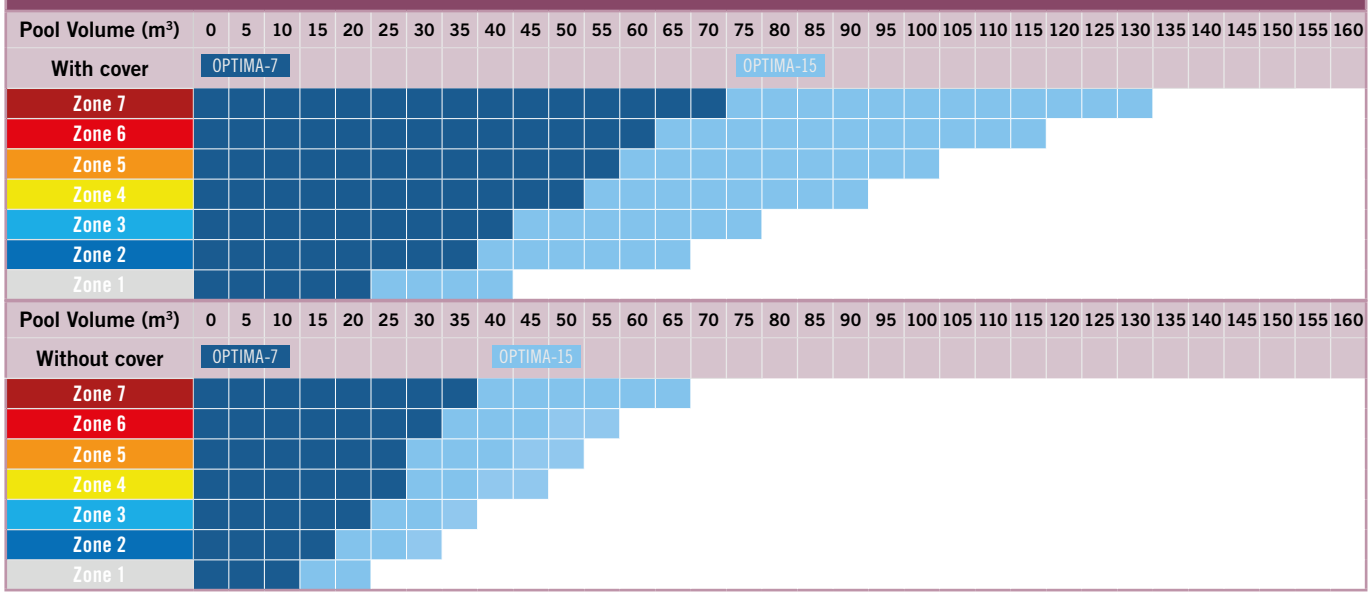

PROHEAT II STANDARD

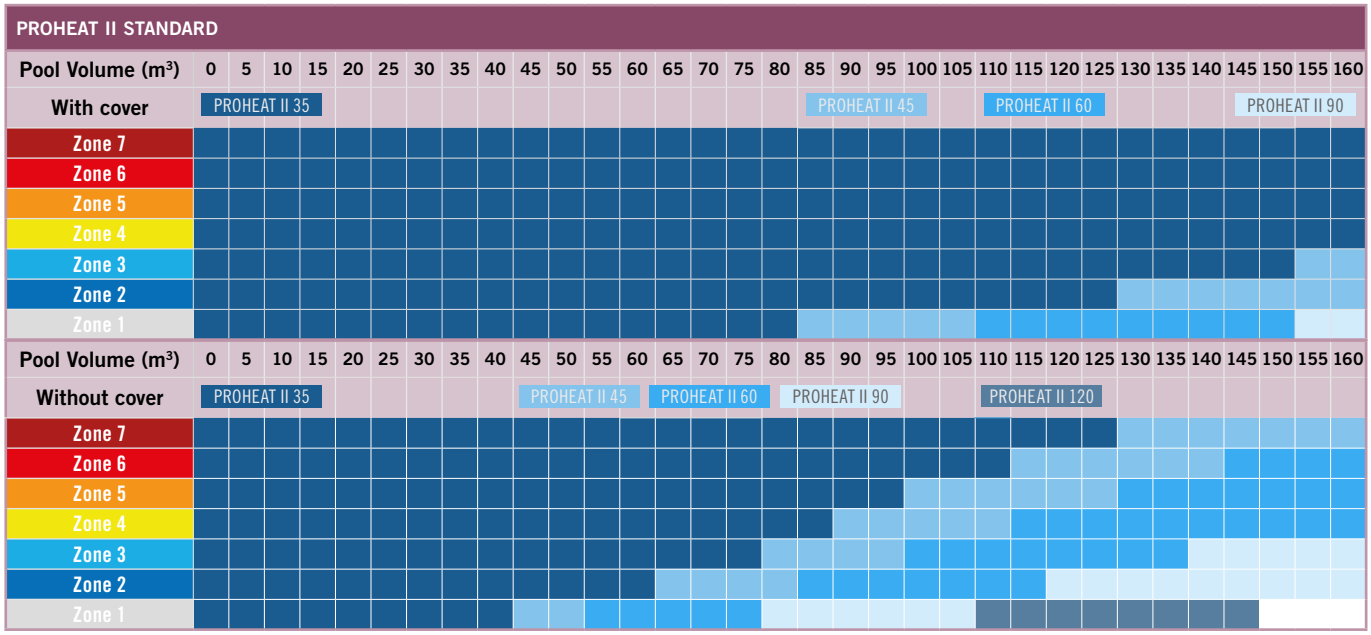

HEATING SIZING HELP TABLES

PROHEAT 2 INDOOR

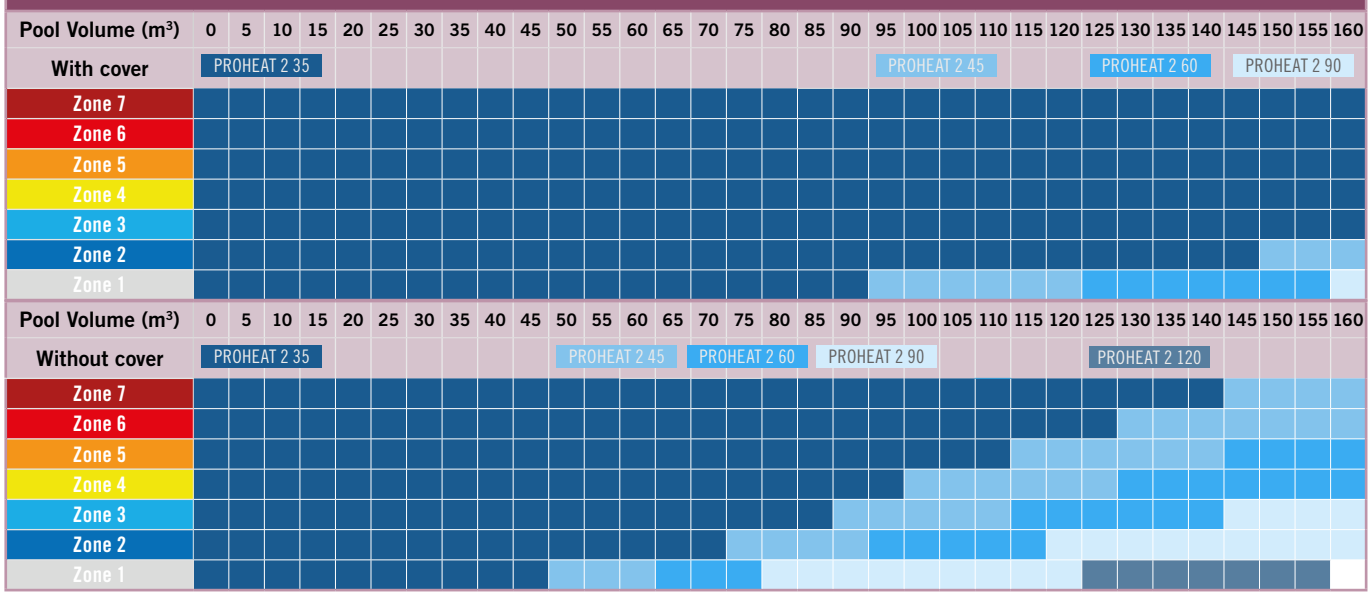

ELECTRICHEAT

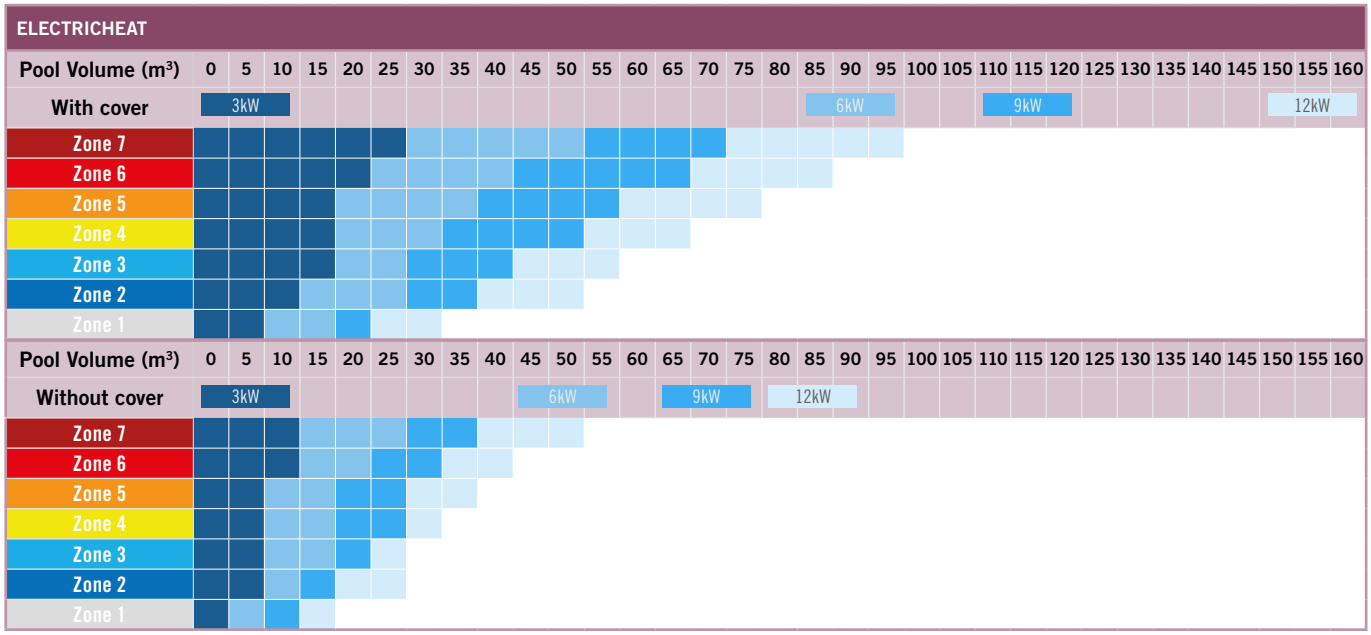

HEATING SIZING HELP TABLES

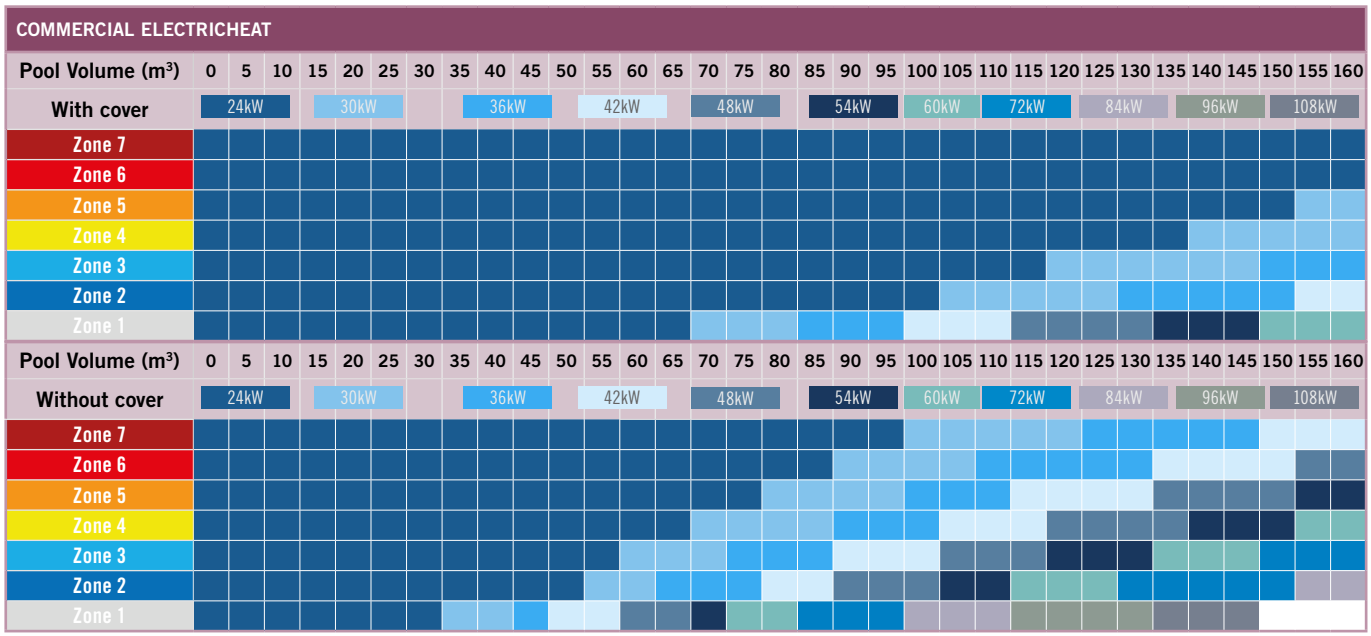

+ info
PDB Product Database
Further information on **PRODUCTS**
www.astralpool.com

AIR-WATER HEAT PUMPS FOR OUTDOOR INSTALLATION





AstralPool Heat 3

- **Full inverter technology:** silent and energy saving.
- **Vertical air blowing** for increased comfort.
- **-20°C** lowest outdoor air working temperature.

Technical features:

- Detachable display.
- Digital touchscreen.
- Heating priority mode (filtration pump control).
- ABS plastic housing.
- DC, variable speed fan.
- Automatic cooling mode.
- Automatic defrosting.
- HP & LP safety pressure switch.
- Water flow switch.
- Titanium water exchanger condenser.
- Inverter Rotary compressor.
- Electronic expansion valve.

Accessories included:

- 1 x Winter Cover.
- 4 x Anti-vibration feet.
- Condensate drainage kit.
- 1 x remote display kit (including 10m extension cable).
- 1 x 10m Modbus Signal wire (to connect the Heat Pump to the Connect Box).
- 2 x PVC fittings ½ union Ø 50.

Fluidra Connect compatible

AstralPool Toolbox app for IOS and Android

TECHNICAL FEATURES						
	MODELS		14 kW	17 kW	21 kW	26 kW
	CODES		68837	68838	68839	68840
REFRIGERANT FLUID			R32			
RECOMMENDED WATER FLOW		m^3/h	4	5	6	8
HYDRAULIC CONNECTION		mm	Ø 50			
ELECTRIC POWER SUPPLY		V/Ph/Hz	220~240V/ 50Hz or 60Hz/1PH			
RATED CURRENT		A	8.1	9.8	12	16
MAXIMUM OPERATING CURRENT		A	11.5	14	17	22.5
RECOMMENDED POWER CABLE SECTION [1]			3x2.5		3x4	
REFRIGERANT FLUID QUANTITY		Kg	1.4	1.8		2.6
ACOUSTIC PRESSURE (L) AT 1M		dB(A)	40-54	41-56		42-60
NET WEIGHT		Kg	70	75	92	111
NET DIMENSION (WxDxH)		mm	820*695*830		950*900*1025	
HEATING PERFORMANCE [2] [3]						
PERFORMANCE AT AIR 28°C. WATER 28°C. RELATIVE HUMIDITY 80%	**HEATING CAPACITY**	kW	3 - 14	3.6 - 17	4.6 - 21	6 - 26
	POWER CONSUMPTION	kW	0.2 - 2.1	0.3 - 2.5	0.4 - 3.1	0.5 - 3.9
	C.O.P		13 - 6.7			
PERFORMANCE AT AIR 15°C. WATER 26°C. RELATIVE HUMIDITY 70%	**HEATING CAPACITY**	kW	2.1 - 9.6	2.5 - 11.5	3.2 - 14.3	4.2 - 18.5
	POWER CONSUMPTION	kW	0.2 - 1.9	0.3 - 2.3	0.4 - 2.9	0.5 - 3.6
	C.O.P		8.5 - 5.1			

[1] For a maximum length of 20 meters.
[2] Power, expressed in kW, indicates the quantity of heat transferred to the water. It varies depending on 3 conditions: temperature of the outside air, humidity of the outside air and temperature of the water in the pool. To compare the performances of different heat pumps, it is a must to compare Power and COP under the same conditions.
[3] Value with Min-Max compressor speed.

AIR-WATER HEAT PUMPS FOR OUTDOOR INSTALLATION





Pro Elyo Touch

- **Full inverter technology:** silent and energy saving.
- **8 power levels** from 8.5 kW to 35 kW*.
- **- 20°C** lowest outdoor air working temperature.

*Temperature conditions of 28°C Air / 28°C Water

Technical features:

- New, wide LED touchscreen.
- Optional remote control kit.
- Heating priority mode (filtration pump control).
- ABS plastic housing with new injected fan grid; galvanized steel protection grid around the evaporator.
- DC, variable speed fan.
- Automatic cooling mode.
- Automatic defrosting.
- HP & LP safety pressure switch.
- Water flow switch.
- Titanium water exchanger condenser.
- Inverter Rotary compressor.
- Electronic expansion valve.

Accessories included:

- 1 x Winter Cover.
- 4 x Anti-vibration feet.
- Condensate drainage kit.
- 1 x 10m Modbus Signal wire (to connect the heat pump to the Connect Box).
- 2 x PVC fittings ½ union Ø 50.

Optional accessories:

- Remote display kit. Code: 74199.



Fluidra Connect compatible

AstralPool Toolbox app for IOS and Android

TECHNICAL FEATURES

MODELS		PET-08	PET-10	PET-13	PET-15	PET-19	PET-25	PET-30	PET-35	PET-30T	PET-35T
CODES		74166	74167	74168	74169	74170	74171	74172	74173	74174	74175
REFRIGERANT FLUID		R32								R410A	
RECOMMENDED WATER FLOW	m^3/h	4	5	6	7	8	10	13			
HYDRAULIC CONNECTION	mm	PVC 1/2 union Ø50									
ELECTRIC POWER SUPPLY	V/Ph/Hz	220*240V/ 50Hz or 60Hz/ 1PH								380V/ 50Hz or 60Hz/ 3PH	
RATED CURRENT	A	4.6	5.9	7.2	9.2	10.5	13.2	17,0	22.9	7	8.4
MAXIMUM OPERATING CURRENT	A	6.4	8.3	10,0	13,0	14.7	18.5	24,0	32,0	9.8	11.8
RECOMMENDED POWER CABLE SECTION (1)		3x1.5		3x2.5			3x4		3x6	5x2.5	5x4
REFRIGERANT FLUID QUANTITY	Kg	0.65	0.7	1	1.1	1.5	1.9	2	2.6	3.8	4
ACOUSTIC PRESSURE (Lp) AT 1M	dB(A)	38-51	39-52	40-52	40-54	40-54	41-56	42-60	42-60	42-60	42-60
NET WEIGHT	Kg	56	68	73	78	98	117	128	130	128	130
NET DIMENSION (WxDxH)	mm	1008*380*577	1050*440*709			1050*450*870		1050*460*1285			
NUMBER OF FANS	units	1						2			
HEATING PERFORMANCE (2) (3)											
PERFORMANCE AT AIR 28°C. WATER 28°C. RELATIVE HUMIDITY 80%	HEATING CAPACITY	kW	8.50 - 3.1	10.5 - 2.3	13.5 - 3	15.9 - 3	19.8- 3.8	25.5 - 4.7	30.0 - 6	35 - 8	30.0 - 6	35 - 8
	POWER CONSUMPTION	kW	1.5 - 0.2	1.7 - 0.15	2.2 - 0.2	2.6 - 0.2	3.3 - 0.25	4.2 - 0.3	5 - 0.35	5.9 - 0.5	5 - 0.35	5.9 - 0.5
	C.O.P		5.8 - 15	6.2 - 16		6 - 16						
PERFORMANCE AT AIR 15°C. WATER 26°C. RELATIVE HUMIDITY 70%	HEATING CAPACITY	kW	6.0 - 2.5	7.5 - 2	9.0 - 2	11.0 - 2.5	13 - 3	17 - 4	21.0 - 5.5	25.0 - 5.5	21.0 - 5.5	25.0 - 5.5
	POWER CONSUMPTION	kW	1.4 - 0.3	1.75 - 0.25	2.0 - 0.25	2.5 - 0.3	2.9 - 0.4	3.9 - 0.5	4.6 - 0.7	5.4 - 0.7	4.6 - 0.7	5.4 - 0.7
	C.O.P		4.5 - 8									

(1) For a maximum length of 20 meters.
(2) Power, expressed in kW, indicates the quantity of heat transferred to the water. It varies depending on 3 conditions: temperature of the outside air, humidity of the outside air and temperature of the water in the pool. To compare the performances of different heat pumps, it is a must to compare Power and COP under the same conditions.
(3) Value with Max-Min compressor speed.

+ info PDB Product Database
Further information on PRODUCTS
www.astralpool.com

AIR-WATER HEAT PUMPS FOR OUTDOOR INSTALLATION



Evoline NN

- 8 power levels from 4.5 kW to 31 kW*.
- Smooth and quiet performance down to 0°C outdoor air temperature.
- Heating and Cooling regulation.

*Temperature conditions of 28°C Air / 28°C Water

Technical features:

- LCD (LED) display, detachable.
- Heating priority mode (filtration pump control).
- ABS plastic housing.
- AC fan.
- Automatic cooling mode.
- Automatic defrosting.
- HP & LP safety pressure switch.
- Water flow switch.
- Titanium water exchanger condenser.
- Scroll compressor.
- Capillary expansion valve.

Accessories included:

- 1 x Winter Cover.
- 4 x Anti-vibration feet.
- Condensate drainage kit.
- 1 x Remote display kit (including 10m extension cable).
- 2 x PVC fittings Ø 50.

Fluidra Connect compatible

AstralPool Toolbox app for IOS and Android

TECHNICAL SPECIFICATIONS

MODELS		EVOLINE 6	EVOLINE 10	EVOLINE 13	EVOLINE 15	EVOLINE 17	EVOLINE 20 (4)	EVOLINE 25	EVOLINE 20T	EVOLINE 25T	EVOLINE 35T (4)	EVOLINE 20-R410A (3)	EVOLINE 35T-R410A (3)
CODES		66069-R32	66070-R32	66071-R32	66072-R32	67405-R32	66073M-R32	66074M-MOD	66073-R32	66074-R32	66075-R32	66073-MOD	66075-MOD
REFRIGERANT FLUID		R32						R410A	R32			R410A	
RECOMMENDED WATER FLOW	m^3/h	2.5	4.5	6	7.5	9	11	13	11	13	19	11	19
HYDRAULIC CONNECTION	mm	Ø 50											
ELECTRIC POWER SUPPLY	V/Ph/Hz	220~240/1/50						220~240/1/50	380/3/50			220~240/1/50	380/3/50
RATED CURRENT	A	4.1	6.2	8.9	9.7	11	13.5	16.8	5.1	5.6	10.1	15.9	10.1
MAXIMUM OPERATING CURRENT	A	5.3	8	11.6	12.6	14.2	20.3	25.2	6.7	7.3	13.6	23.9	15.2
RECOMMENDED POWER CABLE SECTION (1)		3*1.5	3*2.5				3*4		5*2.5		5*4	3*4	5*4
REFRIGERANT FLUID QUANTITY	Kg	0.4	0.8	0.9	1.1	1.15	1.1	2.3	1.25	1.2	2.2	1.7	2.6
ACOUSTIC PRESSURE (Lp) AT 1M	dB(A)	<55	<52		<56	<51	<59	<56	<59	<60		<56	<57
NET WEIGHT	Kg	33	48	54	60	68	92	99	92	103	120	91	120
NET DIMENSION (WxDxH)	mm	798x293x511	958x360x581	1015x370x621		1080x416x708		1078x416x958	1080x416x708	1078x416x958	1078x446x1258	1080x416x708	1078x446x1258
NUMBER OF FANS	units	1									2	1	2
HEATING PERFORMANCE (2)													
PERFORMANCE AT AIR 28°C, WATER 28°C, RELATIVE HUMIDITY 70%	HEATING CAPACITY	kW	4.7	7.4	10.4	11.6	14.9	17.4	22.7	18.5	22.3	30.9	17.6	32.3
	POWER CONSUMPTION	kW	0.9	1.3	1.9	2.1	2.4	2.9	3.6	3.0	3.2	4.9	3.2	5.6
	C.O.P		5.4	5.6	5.4	5.6	6.3	5.9	6.4	6.3	6.9	6.4	5.4	5.8
PERFORMANCE AT AIR 15°C, WATER 26°C, RELATIVE HUMIDITY 70%	HEATING CAPACITY	kW	3.2	5.5	7.6	8.4	10.7	12.9	16.3	13.4	16.1	22.8	12.4	23.4
	POWER CONSUMPTION	kW	0.8	1.2	1.7	1.9	2.2	2.8	3.5	2.9	3.2	4.8	3.1	5.1
	C.O.P		4.0	4.7	4.5		4.9	4.6	4.7		5.0	4.8	4.0	4.6

(1) For a maximum length of 20 meters.
(2) Power, expressed in kW, indicates the quantity of heat transferred to the water. It varies depending on 3 conditions: temperature of the outside air, humidity of the outside air and temperature of the water in the pool. To compare the performances of different heat pumps, it is a must to compare Power and COP under the same conditions.
(3) Product available until stocks last.
(4) Available during 2021 season, once R410 equivalents are sold out.

AIR-WATER HEAT PUMPS FOR OUTDOOR INSTALLATION





ProHeat II

- 0°C minimum outdoor air temperature.
- 2 models: Standard and Chiller.
- Digital display.
- Heating priority mode (filtration pump control).
- Robust, lightweight casing made from corrosion-resistant magnesium coated aluminium.
- Axial ventilator.
- Automatic cooling mode for chiller model.
- Automatic defrosting.
- HP & LP safety pressure switch.
- Water flow switch.
- G2 Titanium water exchanger condensers. Guaranteed against corrosion.
- Scroll compressor.
- Thermostatic expansion valve, with external balancing unit.
- High performance evaporator battery in an inner corrugated copper tube with lacquered aluminium fins, especially for corrosive environments.
- Control of purifying system.
- Automatic electrical protections.

Fluidra Connect compatible

AstralPool Toolbox app for IOS and Android

Web
Heat pump configurator:
www.astralpool.com -> Calculation tools

TECHNICAL SPECIFICATIONS

		MODELS	PROHEAT II 35	PROHEAT II 45	PROHEAT II 60	PROHEAT II 90	PROHEAT II 120
		Code STANDARD	65542-MOB	65543-MOB	65544-MOB	65545-MOB	65546-MOB
		CHILLER	68245-MOB	68246-MOB	68247-MOB	68248-MOB	68249-MOB
REFRIGERANT FLUID			R-410A				
RECOMMENDED WATER FLOW		m^3/h	12-15	15-25	25-35	30-50	50-70
HYDRAULIC CONNECTION		mm	63			75	
REFRIGERANT FLUID QUANTITY		kg	4	6	9	2 x 6.5	2 x 9
NUMBER OF FANS			1			2	
ELECTRIC POWER SUPPLY		V/Ph/Hz	400/3/50				
SOUND LEVEL		dbA (d*)	66.2	66.2	72.5	71.1	71.1
		dbA (5 m)	60.9	60.9	68.4	69.4	69.4
25°C Tª AIR 26°C Tª WATER	POWER CONSUMPTION	kW	6.4	8.2	11.9	17.0	24.3
	HEATING CAPACITY	kW	36.2	44.4	63.5	91.3	125.5
	COP		5.7	5.4	5.3	5.4	5.2
15°C Tª AIR 26°C Tª WATER	POWER CONSUMPTION	kW	6.2	8.1	11.5	16.8	23.9
	HEATING CAPACITY	kW	30.5	39.7	56.8	80.2	110.5
	COP		4.9	4.9	4.9	4.8	4.6
5°C Tª AIR 26°C Tª WATER	POWER CONSUMPTION	kW	6.0	7.9	10.7	16.2	22.7
	HEATING CAPACITY	kW	23.2	30.0	41.3	61.0	80.1
	COP		3.9	3.8	3.9	3.8	3.5
CHILLER MODE							
30°C AIR TEMPERATURE 26°C WATER TEMPERATURE	POWER CONSUMPTION	kW	7.0	8.4	12.0	17.3	24.4
	COOLING CAPACITY	kW	42.3	51.0	72.0	104.0	140.0
	EER		6.0	6.1	6.0	6.0	5.7
43°C AIR TEMPERATURE 32°C WATER TEMPERATURE	POWER CONSUMPTION	kW	9.4	11.9	15.6	24.5	31.2
	COOLING CAPACITY	kW	29.1	37.0	49.5	74.0	99.0
	EER		3.1	3.1	3.2	3.0	3.2
STANDARD AND CHILLER MODELS							
SIZE							
		A (mm)	1000		1700	2100	2400
		B (mm)	950		1200		
		C (mm)	1140		1200	1500	1700
NET WEIGHT		kg	185	210	287	447	500

NOTE: d* = As per UNE-EN 12102/ISO 3744:2010.

+ info
PDB Product Database
Further information on PRODUCTS
www.astralpool.com

AIR-WATER HEAT PUMPS FOR INDOOR INSTALLATION



ProHeat II

- 0°C minimum outdoor air temperature.
- Digital display, easy-to-use control panel, with display of current temperature, setpoint and alarm messages.
- Heating priority mode (filtration pump control).
- Robust, lightweight casing made from corrosion-resistant magnesium coated aluminium.
- Axial ventilator.
- Automatic cooling mode (chiller model).
- Automatic defrosting.
- HP & LP safety pressure switch.
- Water flow switch.
- G2 Titanium water exchanger condensers. Guaranteed against corrosion.
- Scroll compressor.
- Thermostatic expansion valve, with external balancing unit.
- High performance evaporator battery in an inner corrugated copper tube with lacquered aluminium fins, especially for corrosive environments.
- Control of purifying system.
- Automatic electrical protections.
- Centrifugal fans so the unit will be installed in a technical room, using air ducting.

COMPATIBLE NN thing
Fluidra Connect compatible

TOOL BOX
AstralPool Toolbox app for IOS and Android

Web
Heat pump configurator:
www.astralpool.com -> Calculation tools

TECHNICAL SPECIFICATIONS

		MODELS	PROHEAT II IND-35	PROHEAT II IND-45	PROHEAT II IND-60	PROHEAT II IND-90	PROHEAT II IND-120
		CODE	69649-MOB	69650-MOB	69651-MOB	69652-MOB	69653-MOB
REFRIGERANT FLUID			R-410A				
RECOMMENDED WATER FLOW		m³/h	12-15	15-25	25-35	30-50	50-70
HYDRAULIC CONNECTION		mm	63		75		
REFRIGERANT FLUID QUANTITY		kg	6	9	12	2 x 7	2 x 9
NUMBER OF FANS			1			2	
ELECTRIC POWER SUPPLY		V/Ph/Hz	400/3/50				
SOUND LEVEL		dbA (d*)	59.2	59.6	60.0	61.1	61.5
		dbA (5 m)	55.4	55.8	56.1	56.5	56.6
25°C Tª AIR 26°C Tª WATER	POWER CONSUMPTION	kW	6.7	9.4	11.8	18.7	23.6
	HEATING CAPACITY	kW	43.6	56.6	71.0	113.1	141.9
	COP		6.5	6.0	6.0	6.0	6.0
15°C Tª AIR 26°C Tª WATER	POWER CONSUMPTION	kW	6.4	8.6	11.0	17.1	22.1
	HEATING CAPACITY	kW	34.9	45.0	57.5	90.1	114.9
	COP		5.4	5.3	5.2	5.3	5.2
5°C Tª AIR 26°C Tª WATER	POWER CONSUMPTION	kW	6.5	8.5	11.2	16.9	22.3
	HEATING CAPACITY	kW	27.4	35.2	45.2	70.5	90.3
	COP		4.2	4.2	4.1	4.2	4.1
DIMENSIONS							
SIZE							
	A (mm)		1610	1910		1922+50	2400+100
	B (mm)		1160+100	1197+100		2110+100	2024+50
	C (mm)		1347+50	1497+50		1590+50	1670+50
NET WEIGHT		kg	315	391	437	648	757

NOTE: d* = As per UNE-EN 12102/ISO 3744:2010.

AIR-WATER HEAT PUMPS FOR INDOOR INSTALLATION



Includes Modbus connection

Maya

- +5°C minimum outdoor air temperature.
- Compact design for installation in a pump room.
- Made of non-corrosive magnesium coated aluminium.
- Direct transmission centrifugal ventilator.
- Scroll compressor.
- Titanium condensers with PVC shells and in G2 titanium coil according to ASTM B 338.99 standard. Guaranteed against corrosion.

TECHNICAL FEATURES

MODELS			MAYA-15	MAYA-25
MAGNESIUM ALUMINIUM			32505-MOB	32506-MOB
ELECTRIC POWER SUPPLY		V/Ph/Hz	400/3/50	
REFRIGERANT FLUID QUANTITY		kg	2.5	4.5
AIR FLOW		m³/h	2500	6000
RECOMMENDED WATER FLOW		m³/h	7	8
HYDRAULIC CONNECTION		mm	50	
Tª. AIR 15ºC	POWER CONSUMPTION	kW	3.6	5.7
	HEATING CAPACITY	kW	16.3	24.8
	COP		4.5	4.3

Water temperature 26ºC.
Operating limits and conditions: Maximum water temperature: 36 ºC. Maximum water pressure on entering the machine: 3.5 bar.

AIR-WATER HEAT PUMPS FOR OUTDOOR INSTALLATION



Includes Modbus connection

Optima

- +5°C minimum outdoor air temperature.
- Robust, lightweight ABS casing made from magnesium coated aluminium.
- Standard: Operating as a heat pump with reverse cycle defrosting.
- Chiller: Providing heat or cold to maintain the temperature of the pool with reverse cycle defrosting.
- Scroll compressor.
- Titanium condensers made of PVC casing and TITANIUM G2 coil. Guaranteed against corrosion. It includes drainage for care in the winter.

TECHNICAL SPECIFICATIONS

MODELS			OPTIMA-7	OPTIMA-15
CHILLER			45694-MOB	45696-MOB
ELECTRIC POWER SUPPLY		V/Ph/Hz	230/1/50	220/1/50
WATER FLOW	STANDARD	m³/h	12	12
	CHILLER	m³/h	12	16
Tª AIR 15ºC	HEATING CAPACITY	kW	8.9	16
	POWER CONSUMPTION	kW	1.8	3.5
	COP		4.9	4.6
CHILLER MODE				
Tª AIR 30ºC	COOLING CAPACITY	kW	9.2	15.7
	POWER CONSUMPTION	kW	2	3.9
	EER		4.7	4.1
Tª AIR 35ºC	COOLING CAPACITY	kW	8.6	14.7
	POWER CONSUMPTION	kW	2.2	4.3
	EER		3.9	3.5

Water temperature: 26 ºC.
Operating limits and conditions: Maximum water temperature: 40 ºC. Maximum water pressure on entering the machine: 3.5 bar.

+ info
PDB Product Database
Further information on PRODUCTS
www.astralpool.com

WATER-AIR CHILLERS FOR INDOOR OR OUTDOOR INSTALLATION



ALASKA



SIBERIA

Includes Modbus connection

The fan is fitted vertically in the Alaska 10, 15 and 17 models

Alaska - Siberia

- +5°C minimum outdoor air temperature.
- 2 compact models: For outdoor (Alaska) or indoor (Siberia) installation.
- Digital display.
- Heating priority (filtration pump control).
- Made of non-corrosive magnesium coated aluminium.
- Helicoidal ventilators with direct coupling motor for the Alaska model, centrifugal for the Siberia model.
- Defrosting thermostat in evaporator for enhanced performance.
- HP & LP safety pressure switch.
- Water flow switch.
- Condensor made of copper pipe with coated aluminium fins (special for corrosive environments).
- Scroll compressor with carter resistance and deoxidized copper.
- Thermostatic expansion valve.
- Titanium evaporator with PVC shell and in G2 titanium coil according to ASTM B 338.99 standard. Guaranteed against corrosion.
- Anti-acid dehydrating filter.

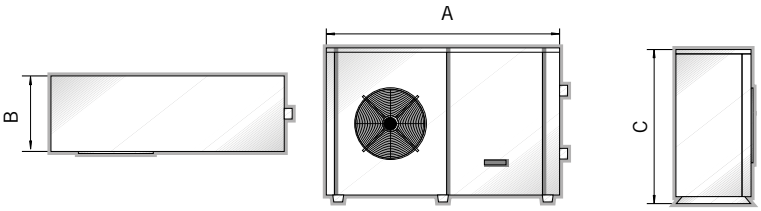

TECHNICAL FEATURES

		MODELS	ALASKA-4	ALASKA-6	ALASKA-8	ALASKA-10	ALASKA-15	ALASKA-17
		Code	32535-MOB	32536-MOB	32537-MOB	32538-MOB	32540-MOB	32541-MOB
		MODELS	SIBERIA-4	SIBERIA-6	SIBERIA-8	SIBERIA-10	SIBERIA-15	SIBERIA-17
		Code	33301-MOB	33302-MOB	33303-MOB	33304-MOB	33306-MOB	33307-MOB
RECOMMENDED POOL VOLUME			5-9	7-14	10-20	13-26	18-36	25-50
REFRIGERANT FLUID			R-407C					
RECOMMENDED WATER FLOW		m^3/h	6-10	6-10	7-12	7-12	10-15	10-15
HYDRAULIC CONNECTION		mm	50					
REFRIGERANT FLUID QUANTITY		kg	2	4.3	4.8	5.5	6.3	6.6
NUMBER OF FANS		Units	1				2	
AIR FLOW		m^3/h	3800	4900	5500	9800	11000	
ELECTRIC POWER SUPPLY		V/Ph/Hz	230/1/50		400/3/50			
ALASKA AIR T.: 27°C WATER T.: 12°C	POWER CONSUMPTION	KW	1.3	2.0	2.8	3.6	5.0	6.6
	COOLING CAPACITY	KW	4.4	5.7	8.9	10.7	16.6	22.7
	EER		3.3	2.9	3.1	3.0	3.4	3.5
SIBERIA AIR T.: 27°C WATER T.: 12°C	POWER CONSUMPTION	KW	1.8	2.3	3.2	4.5	7.7	9.3
	COOLING CAPACITY	KW	4.4	5.7	8.9	10.7	16.6	22.7
	EER		2.4	2.5	2.8	2.4	2.2	2.5
RECOMMENDED POOL VOLUME		m^3	5-9	7-14	10-20	13-26	18-36	25-50

Maximum air temperature 40°C, minimum water temperature 10°C. Maximum water pressure 3.5 bar.

DIMENSIONS AND WEIGHT

		MODELS	ALASKA-4	ALASKA-6	ALASKA-8	ALASKA-10	ALASKA-15	ALASKA-17
SIZE	A	mm	1311 (+80)		1411 (+80)	1372 (+80)	1728 (+80)	
	B	mm	512	540	556	650	708	
	C	mm	746		846	890	866	
	WEIGHT	kg	80	92	102	133	167	197
		MODELS	SIBERIA-4	SIBERIA-6	SIBERIA-8	SIBERIA-10	SIBERIA-15	SIBERIA-17
SIZE	A	mm	1311 (+80)		1311 (+80)	1372 (+80)	1728 (+80)	
	B	mm	550+50	700+50		655+50	655+50	
	C	mm	746		846	890	866	
	WEIGHT	kg	97	112	120	188	219	224

ELECTRIC HEATERS



ELECTRIC VERSION



MANUAL VERSION (ECO)



ELECTRIC VERSION



MANUAL VERSION (ECO)

COMPATIBLE NN thing

Fluidra Connect compatible

Titanium models only

Compact ElectricHeat: Versions in Titanium and Fluidra Connect compatible

EXTERNALLY:

- Linear configuration that offers ease of installation.
- Compact and simple "all in one" design. Simple and elegant lines.
- User-friendly interface. It has a state-of-the-art touch sensor and OLED display (not available for the ECO version).
- Intuitive fashion information for the user.
- Simple and fast electrical connection system.

INTERNALLY:

- Simplicity of components: the internal components have been simplified and reduced.
- Replaceable parts: the internal components are easy to access and replace.
- Accurate and secure electronic adjustment (manual adjustment in the Eco version).
- Hardware and software able to detect failures in a pool facility and its units (not available for the ECO version).
- Standard model with Incoloy resistance, Titanium model with resistances in titanium.
- Model specifically for Fluidra Connect (not available for the INCOLOY version).

	Code	Standard Pack	Standard Weight in kg	Standard Volume in m^3
COMPACT 3 iNCOLOY	**60170**	1	4.20	-
COMPACT 6 iNCOLOY	**60171**	1	4.20	-
COMPACT 9 iNCOLOY	**60172**	1	4.20	-
COMPACT 12 iNCOLOY	**60173**	1	4.20	-
COMPACT 18 iNCOLOY	**60174**	1	4.20	-
COMPACT 3 Titanium	**65321**	1	4.20	-
COMPACT 6 Titanium	**65322**	1	4.20	-
COMPACT 9 Titanium	**65323**	1	4.20	-
COMPACT 12 Titanium	**65324**	1	4.20	-
COMPACT 18 Titanium	**65325**	1	4.20	-
COMPACT ECO 3 iNCOLOY	**69193**	1	4.20	-
COMPACT ECO 6 iNCOLOY	**69194**	1	4.20	-
COMPACT ECO 9 iNCOLOY	**69195**	1	4.20	-
COMPACT ECO 12 iNCOLOY	**69196**	1	4.20	-
COMPACT ECO 18 iNCOLOY	**69197**	1	4.20	-

NB: INCOLOY models do NOT provide protection for salt electrolysis facilities, so this type of facility should use the TITANIUM model to prevent operational problems that would not be covered under warranty.

TECHNICAL FEATURES

ELECTRONIC MODELS		COMPACT 3	COMPACT 6	COMPACT 9	COMPACT-12	COMPACT-18
CODES		60170	60171	60172	60173	60174
		65321	65322	65323	65324	65325
MECHANICAL MODELS		ECO 3	ECO 6	ECO 9	ECO 12	ECO 18
CODES		69193	69194	69195	69196	69197
POWER	kW	3	6	9	12	18
ELECTRICAL SUPPLY*	V/Ph/Hz	230 / 1 / 50-60 or 400 / 3 / 50-60				400 / 3 / 50-60
MIN. WATER FLOW RATE	m^3/h	2.4				
MAX. WATER FLOW RATE	m^3/h	15				
SERVICE PRESSURE	bar	2				
MAX. PRESSURE	bar	3				
WATER CONNECTION	mm Ø	50/63				
MAX. ABSORBED INTENSITY (AMP)	220V/50Hz/1PH	14	27	41	-	-
	380V/50Hz/3PH	5	9	14	18	27
GROSS WEIGHT	kg	4.8				
NET WEIGHT	kg	4.2				

*In the case of 230/1/50-60, check special code.

+ info
PDB Product Database
Further information on PRODUCTS
www.astralpool.com

WATER-WATER EXCHANGER





Waterheat EVO

Heat exchanger suitable for warming the water temperature of pools and SPAS, thanks to the heat exchange between the primary circuit (warm area) and a secondary one (cold area that we want to warm).

- Titanium housing (secondary, pool water).
- Titanium coil (primary, water for boiler).
- Primary working pressure of 10 bar.
- Secondary working pressure of 3 bar.

	Code	Standard Pack	Standard Weight in kg	Standard Volume in m³
TIT-20 kW	**71607**	1	1.2	-
TIT-40 kW	**71608**	1	1.7	-
TIT-60 kW	**71609**	1	1.9	-
TIT-105 kW	**71610**	1	2.2	-
TIT-140 kW	**71611**	1	2.7	-
TIT-210 kW	**71612**	1	3.8	-
TIT-300 kW	**71613**	1	5.3	-
TIT-450 kW	**71614**	1	6.8	-

Diagram of assembly below the water level:

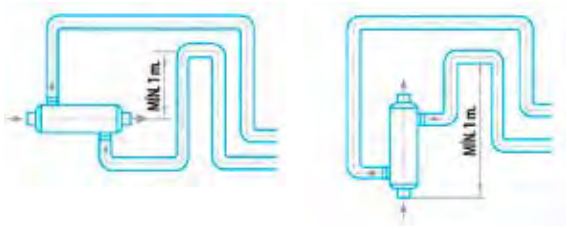

Diagram of assembly below the water level:



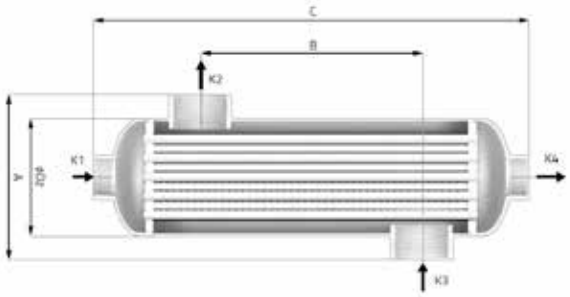

TECHNICAL FEATURES

	MODELS	TIT-20 KW	TIT-40 KW	TIT-60 KW	TIT-105 KW	TIT-140 KW	TIT-210 KW	TIT-300 KW	TIT-450 KW
	CODES	71607	71608	71609	71610	71611	71612	71613	71614
POWER (kW)	90ºC	20	40	60	105	140	210	300	450
	60ºC	10	20	30	40	60	80	120	210
	45ºC	5	10	15	20	3	40	60	100
HEATER	m³/h	1.6	2.7	3.1	6.6	7.0	10.0	11.0	16.0
HEATER LOAD LOSS	bar	0.006	0.024	0.040	0.030	0.040	0.122	0.214	0.470
HEATER CONNECTION	Inch	G ¾"			G 1 ½"				
POOL VOLUME	m³/h	11	15	20	23	20	25	20	21
POOL HEAD LOSS	bar	0.119	0.192	0.418	0.293	0.316	0.633	0.596	0.860
POOL CONNECTION	Inch	G 1"	G 1 ½"						
DIMENSIONS	A (mm)	122			140				
	B (mm)	75	175	225	170	270	420	670	920
	C (mm)	290	390	440	357	457	607	857	1107
	Ø Dz	80			102				
WEIGHT	kg	1.2	1.7	1.9	2.2	2.7	3.8	5.3	6.8

Consult your service engineer about the right selection of unit depending on your installation.
Figures for power settings calculated for pool water at 20° C.

WATER-WATER EXCHANGER



Equipped Waterheat

Heat exchanger suitable for warming the water temperature of pools and SPAS, thanks to the heat exchange between the primary circuit (warm area) and a secondary one (cold area that we want to warm).

- Regulator with secondary pump control, voltage free contact and timer.
- Casing built in Alucoil and ABS plastic.
- Body made in Titanium (secondary, water from pool).
- Coils made in titanium alloy (primary, water from boiler).
- Fully fitted, anti-return valve, primary recirculation pump and control thermostat with immersion probe.
- Primary work pressure 10 bars and secondary work pressure 3 bars.

CONNECTIONS:

- Primary (heating): 1".
- Secondary (pool): D-50 three piece link.

	Code	Standard Pack	Standard Weight in kg	Standard Volume in m^3
TIT-20 kW	**43506**	1	10	-
TIT-40 kW	**43507**	1	11	-
TIT-60 kW	**43508**	1	18	-

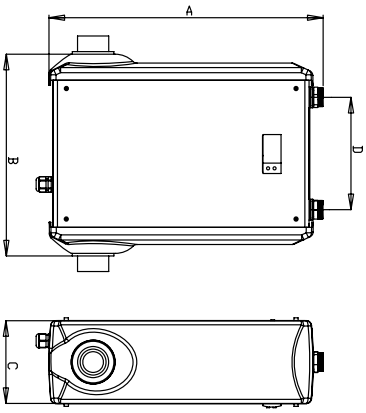



TECHNICAL FEATURES

	MODELS	EQUIP. WATERHEAT-20KW	EQUIP. WATERHEAT-40KW	EQUIP. WATERHEAT-60KW
	CODES	43506	43507	43508
POWER (kW)	90ºC	20	40	60
	60ºC	10	20	30
	45ºC	5	10	15
HEATER	m^3/h	1.6	2.7	3.0
HEATER LOAD LOSS	bar	0.12	0.41	0.70
HEATER CONNECTION	Inch	-	-	-
POOL VOLUME	m^3/h	10	15	20
POOL HEAD LOSS	bar	0.14	0.24	0.29
POOL CONNECTION	Inch	-	-	-
DIMENSIONS	A (mm)	530	530	530
	B (mm)	450	590	650
	C (mm)	160	160	160
	D (mm)	215	225	305
	E (mm)	1"	1"	1"
WEIGHT	kg	10	11	18

Consult your service engineer about the right selection of unit depending on your installation.
Figures for power settings calculated for pool water at 20º C.

WATER-WATER PLATE HEAT EXCHANGER

Etna

- Corrugated plates in AISI-316 or titanium.
- EPDM gaskets.
- Housing in epoxy painted carbon steel.
- In non-equipped heat exchangers, AISI-316 stainless steel connections in ISO G2 direct thread.
- In equipped heat exchangers, primary connections in copper, and secondary in PVC.
- In equipped heat exchangers, full regulation, with control of the filtering pump. Double display (setpoint and current reading).
- Simple recirculating pump in the primary circuit is optional.



Basic model



Equipped model



Equipped model + recirculating pump

Model	AISI-316 codes			Titanium codes			Power		N° Plates	Primary circuit			Secondary circuit		
	Basic model	Equipped model	Model Eq+B(1)	Basic model	Equipped model	Model Eq+B(1)	KW	(kcal/h)		Flow rate (m^3/h)	Head loss (bar)	Connections	Flow rate (m^3/h)	Head loss (bar)	Connections
ETNA-15	**67985**	**68230**	**68021**	**67994**	**68012**	**68030**	17	15,000	5	0.75	0.3	1 ¼"	0.74	0.3	1 ¼"
ETNA-35	**68223**	**68004**	**68022**	**67995**	**68013**	**68031**	40	35,000	7	1.55	0.3	1 ¼"	1.52	0.3	1 ¼"
ETNA-50	**68224**	**68005**	**68023**	**67996**	**68014**	**68032**	58	50,000	9	2.56	0.3	1 ¼"	2.51	0.3	1 ¼"
ETNA-60	**68225**	**68006**	**68024**	**67997**	**68015**	**68033**	70	60,000	11	3.09	0.3	1 ¼"	3.03	0.3	1 ¼"
ETNA-90	**67989**	**68007**	**68025**	**67998**	**68016**	**68034**	105	90,000	15	4.64	0.3	1 ¼"	4.55	0.3	1 ¼"
ETNA-120	**67990**	**68008**	**68026**	**68226**	**68017**	**68035**	140	120,000	19	6.19	0.3	1 ¼"	6.07	0.3	1 ¼"
ETNA-150	**67991**	**68009**	**68027**	**68227**	**68018**	**68036**	174.4	150,000	23	7.71	0.3	1 ¼"	7.56	0.3	1 ¼"
ETNA-180	**67992**	**68010**	**68028**	**68228**	**68019**	**68037**	209	180,000	29	9.23	0.3	1 ¼"	9.06	0.3	1 ¼"
ETNA-200	**67993**	**68011**	**68029**	**68229**	**68020**	**68038**	233	200,000	31	10.3	0.3	1 ¼"	10.1	0.3	1 ¼"
ETNA-250	**32550**	**32563**	**32576**	**33137**	**33155**	**33173**	291	250,000	15	12.86	0.3	2 ½"	12.61	0.3	2 ½"
ETNA-300	**32552**	**32565**	**32578**	**33139**	**33157**	**33175**	349	300,000	17	15.42	0.3	2 ½"	15.13	0.3	2 ½"
ETNA-350	**32553**	**32566**	**32579**	**33140**	**33158**	**33176**	407	350,000	21	17.98	0.3	2 ½"	17.64	0.3	2 ½"
ETNA-400	**33114**	**33119**	**33124**	**33141**	**33159**	**33177**	465	400,000	23	20.55	0.3	2 ½"	20.13	0.3	2 ½"
ETNA-460	**33115**	**33120**	**33125**	**69796**	**33160**	**33178**	535	460,000	25	23.64	0.3	2 ½"	23.19	0.3	2 ½"
ETNA-500	**32554**	**32567**	**32580**	**69797**	**33161**	**33179**	581	500,000	27	25.18	0.3	2 ½"	25.18	0.3	2 ½"
ETNA-580	**33116**	**33121**	**33126**	**69798**	**33162**	**33180**	675	580,000	33	29.26	0.3	2 ½"	29.26	0.3	2 ½"

(1) Eq + B: Equipped model + recirculating pump.

+ info PDB Product Database
Further information on **PRODUCTS**
www.astralpool.com

DEHUMIDIFIERS



TOOL BOX

AstralPool Toolbox app for IOS and Android

Web
Dehumidifier configurator: www.astralpool.com -> Calculation tools

CDP LINE 2 Dehumidifier

The new CPD LINE v2 dehumidifier console is used in installations where individual humidity and temperature control of small pools and spas is required.

- Evaporation and condensation battery made out of copper pipes with lacquered aluminium fins (specially designed for corrosive environments).
- New generation of rotative compressors, more efficient, reliable and quieter.
- Electric heating or hot water coil option.

The new innovations this equipment introduces include the expanded polypropylene structure (EPP) which reduces its weight and noise level and the front panel with a picture the customer can personalize as an optional extra.

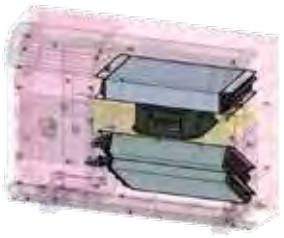

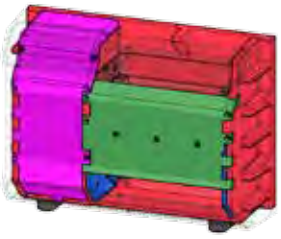

TECHNICAL SPECIFICATIONS

		MODELS	**CDP LINE - 2**	**CDP LINE - 3**	**CDP LINE - 4**	**CDP LINE - 5**
Code		**DEHUMIDIFIER ONLY**	65891	65892	65893	65894
		WITH HOT WATER COIL OPTION	65895	65896	65897	65898
		WITH ELECTRIC HEATING OPTION	65899	65900	65901	65902
DEHUMIDIFICATION CAPACITY*		l/hour	2	3	4	5
HEATING CAPACITY		Hot water coil option kW	6.0		12.0	
		Electric heating option kW	4.0		5.0	
VOLTAGE		V/Ph/Hz	230 / 1 / 50			
FAN		m^3/h	850 (centrifugal fan)		1,000 (centrifugal fan)	
REFRIGERANT		Type	R-410A			
NOISE	**LEVEL 1 m**	dB (A)	62		65	
	LEVEL 3 m	dB (A)	54.7		60	

		A	B	C	D	E	F	G	H	I	J	K	L	M	N	O	P
Size	mm	400	800	1075	290	67	80	610	30	480	152	120	531	825	325	45	50

NET WEIGHT	Hot water coil option (kg)	54	56	63	65
	Electric heating option (kg)	50	52	58	60

* General operating conditions:
Installation air temperature: 28º C.
Humidity: 75 %
Installation minimum air temperature: 20ºC







COMMERCIAL

POOLS & WELLNESS

2021

ASTRALPOOL

Free chlorine

Salt chlorinators
+ UV (Neolysis)

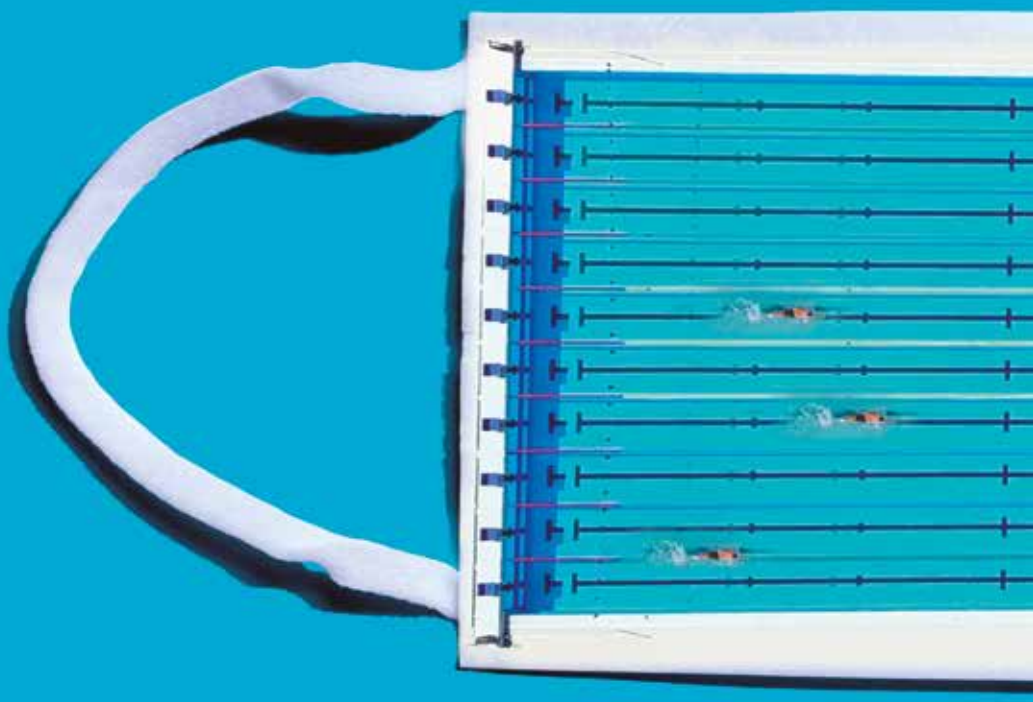

PROPERLY TREATED COMMERCIAL POOLS



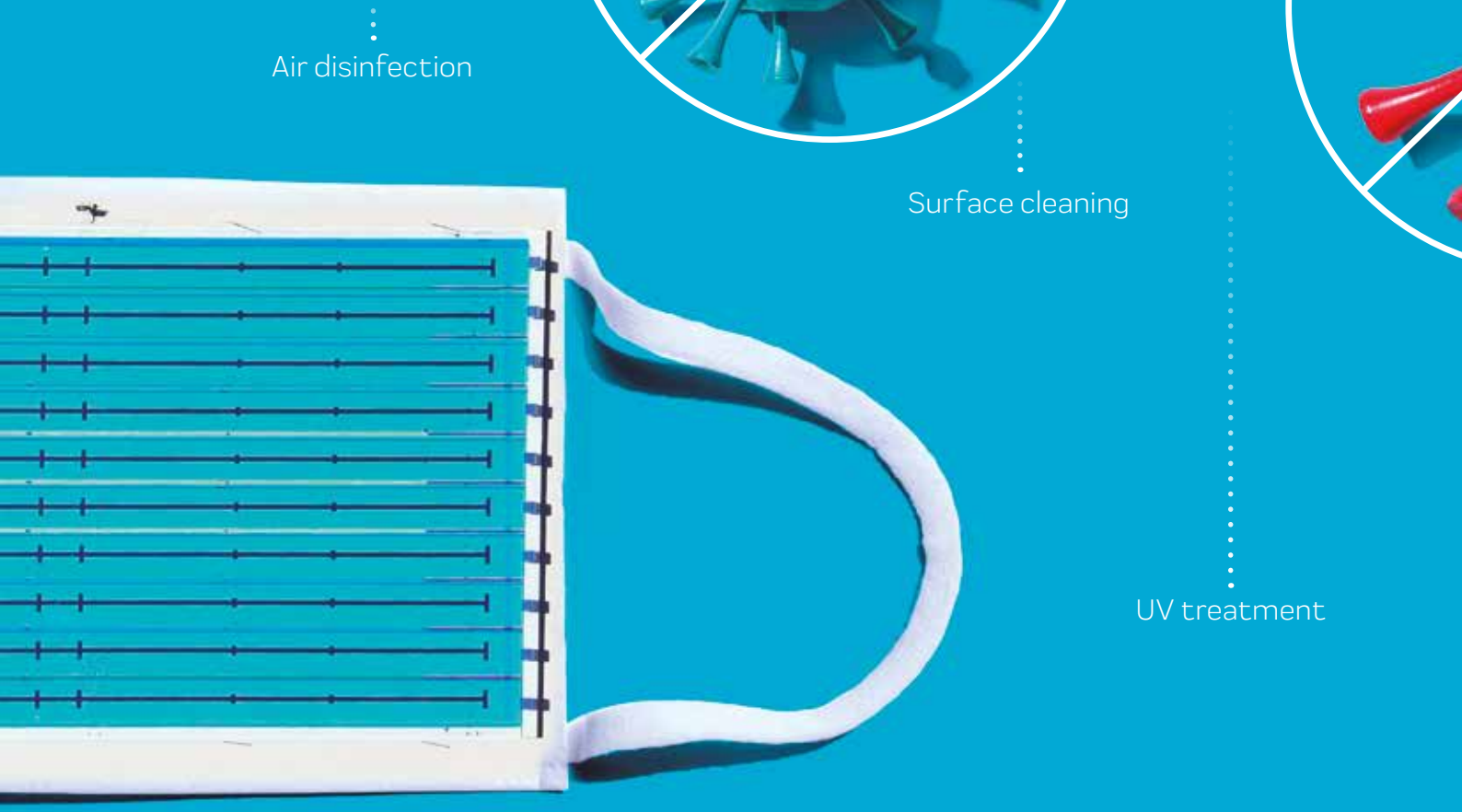

& WELLNESS FACILITIES **ARE SAFE PLACES**

ENJOY THE PERFECT COMMERCIAL POOL & WELLNESS EXPERIENCE IN A **COVID-FREE SPACE**

ASTRALPOOL · CTX Professional · ZODIAC®

#EnjoyaSafePool

FLUIDRA
THE PERFECT POOL EXPERIENCE

@Fluidra · Fluidra · Fluidra Group





FLUIDRA CONNECT



POOL SURROUND EQUIPMENT



POOL SHELL EQUIPMENT



BUILDING SOLUTIONS

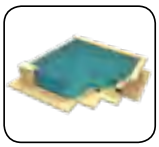

FILTRATION



PUMPS



WATER TREATMENT EQUIPMENT



CLEANING EQUIPMENT



SPAS, SAUNAS, STEAM BATHS AND EMOTIONAL SHOWERS



HEATING AND DEHUMIDIFICATION



COMPETITION MATERIALS







COMMERCIAL POOLS
FLUIDRA CONNECT

456 • Fluidra Connect
458 • Connect & Go Commercial Products
461 • Fluidra Connect accessories

Smart Commercial Pools

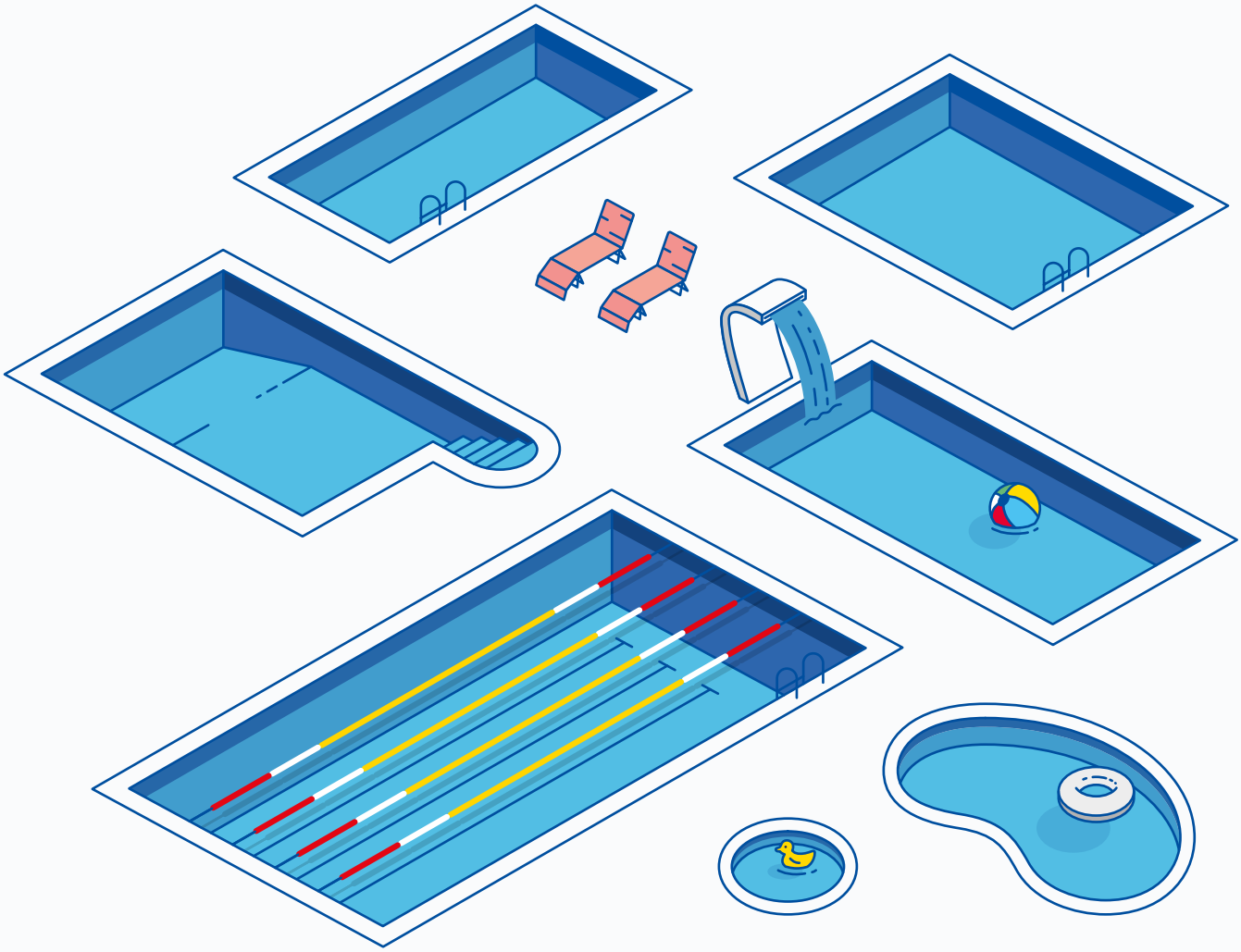

Connectivity for automation and monitoring all types of commercial pools

24/7 Water Quality

Water quality controlled and monitored thanks to the pool equipments synchronized all together in a smart way. Alarm system for real-time corrective maintenance.

Energy Savings

With a combination of connected products and data assisted preventative maintenance actions to reach optimum energy efficiency.

Smart Pool Assistants for all type of pools

Control, diagnose and manage your pool through the fluidraconnect.com platform

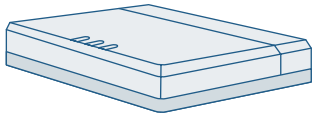

Through the Connect Box from your Connect & Go you will be able to control all types of products, compatible NN as well as the standard ones.

Filtration

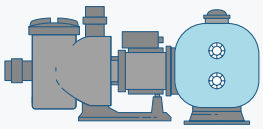

Set-up and control of pumps for energy-efficient programs and optimum filter cleanliness status.

Water treatment

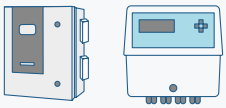

Integral water treatment strategy between all the pool systems. Recording all the measures as per local legislation requirements.

Lighting



Synchronization with other equipments to generate smart ambient.

Surround & Garden Equipment



Control all the pool and garden accessories easily: Covers, fountains, IP Cams, even irrigation systems.

Heating and Dehumidification

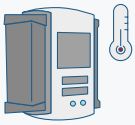

Smart heating strategy for energy optimization together with the filtration and the water treatment equipment.

Control the pools under your supervision from anyplace, whenever you want with our pool assistants platform Fluidra Connect.

www.fluidraconnect.com

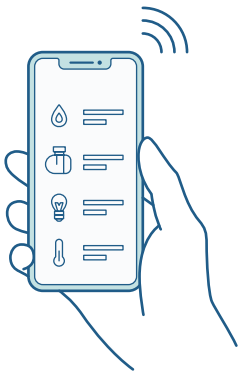



FLUIDRA CONNECT

FLUIDRA CONNECT

Fluidra Connect automation and NN Products for Commercial Pools

Fluidra Connect is a smart automation solution that allows both users and pool professionals to control pools remotely.

Different levels of remote control are offered depending on user profile:

- **End user:**
  - User friendly NN app to remotely monitor and control the pool
- **Pool professional:**
  - Intuitive and versatile NN PRO app to set up each pool and allows to monitor all installed pool sites.
  - Advanced remote control of all installed pool sites using the dedicated pool professional website www.fluidraconnect.com.

All product platforms below are NN compatible to allow a smart control & exchange with Fluidra Connect and associated smartphone apps and website.

User(s) can see more operating data and be able to access to more settings compared to standard products.

Water Treatment Equipment



	Salt Water Chlorinators and Hybrid systems			
	Easy Salt Next	**Pro-Chlore Salt**	**Nature Salt**	**Neolysis**
More info on page	581	582	583	584



	Automatic Regulation and Control Equipment		Dosing Pumps	Water metering
	AP PR-200 Compatible Electrolysis	**Controller**	**Optima Plus**	**Woltman type turbine meters**
More info on page	595	597	593	595

FLUIDRA CONNECT

INTERNET OF POOLS

FLUIDRA CONNECT

Pumps

The pumps group are controlled through the GPIO (up to 4 pumps)		
	Variable speed pumps	Automatic multiport valve
	Victoria Plus Silent VS	**VRAC III automatic valve**
More info on page	173	165

Pool Lighting

RGB LED lighting becomes "NN" with Lumiplus Modbus and modulator (57435)	
	LED Lighting
	RGB lights
More info on page	257

Cleaning Equipment

The Net'n'clean is controlled through the GPIO	
	Integrated in-floor pool cleaning
	Net'N'Clean
More info on page	245

Heating

	
	Heat Pumps
	ProHeat II
More info on page	639

FLUIDRA CONNECT
INTERNET OF POOLS

THE FUTURE IS HERE

CONNECT & GO COMMERCIAL PRODUCTS

Convenience & easy installation

A range of Connect & Go power center cabinets is offered to suit most commercial pools configurations.

Connect & Go Commercial power center cabinets contain all electrical protections and switches to manage pool equipment. Everything is pre-wired to ease installation process so it is the perfect solution for new pools, while also being adapted to retrofit situation (simply replace the whole cabinet with Connect & Go Commercial).

Fluidra Connect is a smart solution that enables end users and pool dealers to control a pool remotely. This makes it possible for pool dealers to check out, manage and control all the pools they have installed from a PC.



Connect & Go Commercial – EASY

Control and power devices for up to 3 pump sets with direct start and control devices for balancing tank. The panel includes control devices for lightning.

- 3 Filtration Pumps (3-phase).
- 1 Lighting Control.
- Balancing tank minimum level.
- Balancing tank filling level.
- Balancing tank maximum level.
- Transformer 24VAC filling valve.
- 3 Control pump switches M-0-A.
- 1 Lighting switch M-0-A.
- 1 Filling switch 0-A.
- 1 Digital input to monitor the filtration status.
- 1 Digital inputs to monitor the motor circuit breakers.
- 2 Digital inputs to monitor maximum and minimum balancing tank level.

	Code	Standard Pack	Standard Weight in kg	Standard Volume in m^3
Easy (2 HP)	**72272**	1	-	-
Easy (3 HP)	**72271**	1	-	-

Connect & Go Commercial – DIRECT

Control and power devices for up to 3 pump sets with direct start and control devices for balancing tank. The panel includes analog inputs, control of motorized valves in suction manifold and control devices for lightning.

- 3 Filtration Pumps (3-phase).
- 1 Lighting Control.
- 1 Aux. Output (max 10A).
- Balancing tank minimum level.
- Balancing tank filling level.
- Balancing tank maximum level.
- Transformer 24VAC filling valve.
- 3 Control valves inlet pumps.
- 3 Control pump switches M-0-A.
- 1 Lighting switch M-0-A.
- 1 Filling switch 0-A.
- Real energy / Reactive energy / Apparent energy meter.
- 4 Analog inputs (4-20mA).
- 3 Digital inputs to monitor filtration pump status.
- 3 Digital inputs to monitor the motor circuit breakers.
- 3 Digital inputs to monitor end of stroke.
- 2 Digital inputs to monitor maximum and minimum balancing tank level.
- 2 Digital inputs for water-meter by pulses.
- 3 Available digital inputs.
- 4 Available digital outputs (max 2A).

	Code	Standard Pack	Standard Weight in kg	Standard Volume in m^3
Direct (1 HP)	**72720**	1	-	-
Direct (2 HP)	**72718**	1	-	-
Direct (3 HP)	**72719**	1	-	-

CONNECT & GO COMMERCIAL PRODUCTS

Connect & Go Commercial – SMART

Control and power devices for up to 3 pump sets with soft start and control devices for balancing tank. The panel includes analog inputs, control of motorized valves in suction manifold and control devices for lightning.

- 3 Filtration Pumps (3-phase).
- 1 Lighting Control.
- 1 Aux. Output (max 10A).
- Balancing tank minimum level.
- Balancing tank filling level.
- Balancing tank maximum level.
- Transformer 24VAC filling valve.
- 3 Control valves inlet pumps.
- 3 Control pump switches M-0-A.
- 1 Lighting switch M-0-A.
- 1 Filling switch 0-A.
- Real energy / Reactive energy / Apparent energy meter.
- 4 Analog inputs (4-20mA).
- 3 Digital inputs to monitor filtration pump status.
- 3 Digital inputs to monitor the motor circuit breakers.
- 3 Digital inputs to monitor end of stroke.
- 2 Digital inputs to monitor maximum and minimum balancing tank level.
- 2 Digital inputs for water-meter by pulses.
- 3 Available digital inputs.
- 4 Available digital outputs (max 2A).

	Code	Standard Pack	Standard Weight in kg	Standard Volume in m^3
Smart (3 HP)	**72713**	1	-	-
Smart (5.5 HP)	**72714**	1	-	-
Smart (7.5 HP)	**72715**	1	-	-
Smart (10 HP)	**72716**	1	-	-
Smart (12 HP)	**72717**	1	-	-



Connect & Go Commercial – CONTROL PUMP CABINET

Control pump devices for commercial pools.

	Code	Standard Pack	Standard Weight in kg	Standard Volume in m^3
Control pump (up to 4 pumps)	**70745**	1	-	-
Control pump (up to 8 pumps)	**70746**	1	-	-

FLUIDRA CONNECT®

CONNECT & GO

Installation Diagram







CONNECT & GO
POWER CENTER CABINET

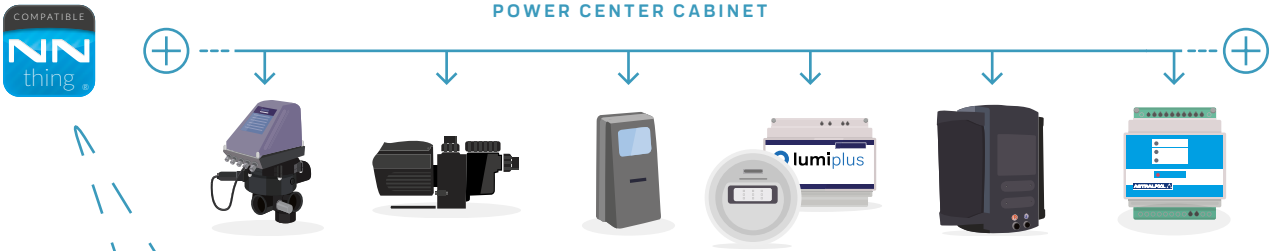

GPIO*

Device with 4 inputs & 4 outputs provided with Connect & Go power center cabinet to manage standard products

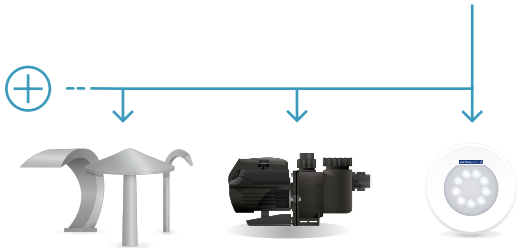

Any standard product can be controlled



More than 100 compatible Fluidra Connect products available

* 1 GPIO is installed inside Connect & Go power center cabinets. Additional GPIO can be purchased separately to control more equipment. See code 62368 on page 36.

FLUIDRA CONNECT
INTERNET OF POOLS

FLUIDRA CONNECT ACCESSORIES

Fluidra Connect accessories

	Code	Standard Pack	Standard Weight in kg	Standard Volume in m^3
Connect box	**66671**	-	-	-
GPIO	**62368**	-	-	-
230 VAC opto-isolator	**66395**	-	-	-
24 VAC opto-isolator	**66396**	-	-	-
Switch - 5 ports	**66390***	-	-	-
Power Line Communications - 2 ports	**66391***	-	-	-
Indoor Wi-Fi access point	**66392***	-	-	-
Outdoor router	**66393***	-	-	-
Portable router	**66394***	-	-	-
3G router (requires SIM card)	**67297***	-	-	-
3G router for DIN rail (requires SIM card)	**67298***	-	-	-
SEM1 single-phase meter with transformer	**68441**	-	-	-
SEM3 single-phase meter with 3 transformers	**68442**	-	-	-
Bridge Modbus TCP/RTU	**68168**	-	-	-
Modbus temperature sensor kit	**69682**	-	-	-

* While stocks last



66395 - 66396



66671



62368



66392



66393



66394



67297



68441-68442



68168





COMMERCIAL POOLS
POOL SURROUND EQUIPMENT

464 • Pool access - Ladders
466 • Pool access - Exit grab rails
467 • Pool access - Anchoring sockets and handrails
469 • Pool access - Disabled access
471 • Handrails
472 • Handrail attachment support
473 • Lifeguard chairs
473 • Life-saving accessories
474 • Showers - Showers with timers
474 • Showers - Shower tunnels
475 • Showers - Outdoor footbaths
475 • AstralPool Bike
476 • Water games and ornamental water features
491 • Grilles for overflow

+ info PDB Product Database
Further information on **PRODUCTS**
www.astralpool.com

POOL ACCESS - LADDERS

Overflow 1000 model



Complies with Standard
EN 13451-1
EN 13451-2

Ladder width 500 mm Ø 43 mm handrail, non-slip surface stainless treads, bright satin finish, anchoring fixtures for connection to the equipotential circuit and removable anchoring with plate for fastening to wall. AISI-316L handrail and steps.

	Code	Standard Pack	Standard Weight in kg	Standard Volume in m³
1 "Luxe" steps + 1 double safety step	**07514**	1	13.2	0.158
2 "Luxe" steps + 1 double safety step	**07515**	1	15.3	0.180
3 "Luxe" steps + 1 double safety step	**07516**	1	17.1	0.202
4 "Luxe" steps + 1 double safety step	**07517**	1	19.2	0.217

Code	Steps	A	B
07514	2	1450	700
07515	3	1710	960
07516	4	1970	1220
07517	5	2230	1480

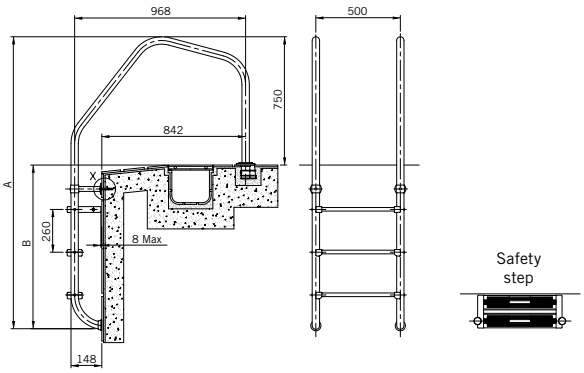

Ladder for swimming pools with overflow



Complies with Standard
EN 13451-1
EN 13451-2

Includes variable radius curvature in grip section for a contemporary and attractive look. Steps 500 mm wide. Easy to install. Ø 43 mm x 1.5 mm handrail with AISI-316L bright satin finish stainless steel steps. Anchoring fixtures for connection to the equipotential circuit NB: Do not permit mounting on anchoring fixtures 00043, 08727, 07331, 18243.

	Code	Standard Pack	Standard Weight in kg	Standard Volume in m³
2 steps ladder	**32653**	1	13.2	0.158
3 steps ladder	**32654**	1	16.2	0.180
4 steps ladder	**32655**	1	17.1	0.202
5 steps ladder	**32656**	1	19.2	0.217

Code	Steps	A	B
32653	2	1450	700
32654	3	1710	960
32655	4	1970	1220
32656	5	2230	1480

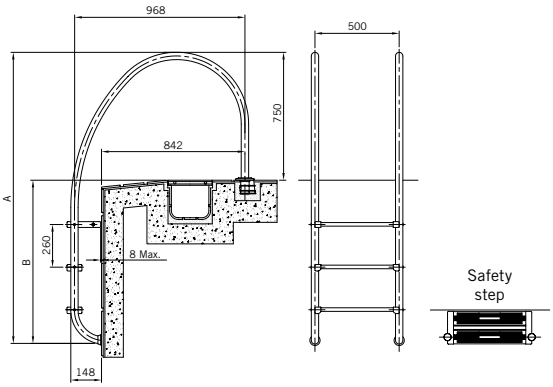

Double non-slip safety step



Complies with Standard
EN 13451-1
EN 13451-2

AISI-316L stainless steel with bright satin finish. For all in-ground pool ladder models.

	Code	Standard Pack	Standard Weight in kg	Standard Volume in m³
Safety step	**70662**	1	2.05	0.003

POOL ACCESS - LADDERS



Complies with Standard **EN 13451-2**

PMR ladder for public pools

Public ladder manufactured in AISI-316L stainless steel. Polished finish. Step with non-slip punching.

	Code	Standard Pack	Standard Weight in kg	Standard Volume in m³
3 steps ladder	**64894**	1	35.0	-
4 steps ladder	**64895**	1	41.0	-
5 steps ladder	**64896**	1	35.0	-
6-step ladder	**64897**	1	46.5	-
7-step ladder	**64898**	1	46.5	-
8-step ladder	**64899**	1	46.5	-

POOL ACCESS - EXIT GRAB RAILS



800 x 800 mm model

Set of 2 tubular handrails in polished S.S. AISI-316L Ø 43 mm pipe. Exit grab rails with fixing plates are supplied as a pair including fixing plates, gaskets, screws and wall plugs.

	Code	Standard Pack	Standard Weight in kg	Standard Volume in m³
Attachment by means of fixing plate	**05541**	1	9.27	0.10
Attachment for embedding	**05540**	1	8.40	0.10



470 x 800 mm model

Set of 2 tubular handrails in polished S.S. AISI-316L Ø 43 mm pipe. Exit grab rails with fixing plates are supplied as a pair including fixing plates, gaskets, screws and wall plugs.

	Code	Standard Pack	Standard Weight in kg	Standard Volume in m³
Attachment by means of fixing plate	**05542**	1	6.97	0.08



470 x 800 mm model with rectangular base plate

Set of 2 tubular handrails in polished S.S. AISI-316L Ø 43 mm pipe. The exit grab rails with base plates are supplied with screws and wall plugs.

	Code	Standard Pack	Standard Weight in kg	Standard Volume in m³
Attachment by means of fixing plate	**05543**	1	7.6	0.08



Crossover model with rectangular base plate

Set of 2 tubular handrails in polished S.S. AISI-316L Ø 43 mm pipe. The exit grab rails with base plates are supplied with wall plugs and screws.

	Code	Standard Pack	Standard Weight in kg	Standard Volume in m³
Attachment by means of fixing plate	**05544**	1	8.46	0.18

* 1 additional year warranty. For more information see the warranty certificate in the manual.

+ info PDB Product Database
Further information on **PRODUCTS**
www.astralpool.com

POOL ACCESS - EXIT GRAB RAILS



Parallel model

Set of 2 tubular handrails in polished S.S. AISI-316L Ø 43 mm pipe. For fixing with anchoring fixture code 00143 (not included).

	Code	Standard Pack	Standard Weight in kg	Standard Volume in m³
Parallel model	**00110**	1	10.0	0.11



Asymmetrical model

Set of 2 tubular handrails in polished S.S. AISI-316L Ø 43 mm pipe. For fixing with anchoring fixture code 00143 (not included).

	Code	Standard Pack	Standard Weight in kg	Standard Volume in m³
Asymmetrical model	**00111**	1	10.1	0.14



Split ladder - Bottom half

AISI-316L bright satin stainless steel steps and Ø 43 mm handrail. Can be combined with any ladder model. Fastening with plates, gaskets, wall plugs and screws.

	Code	Standard Pack	Standard Weight in kg	Standard Volume in m³
1 “Luxe” step + 1 double safety step	**08090**	1	6.0	0.04
2 “Luxe” steps + 1 double safety step	**08091**	1	7.6	0.04
3 “Luxe” steps + 1 double safety step	**08092**	1	9.0	0.05
4 “Luxe” steps + 1 double safety step	**08093**	1	10.5	0.07

UNE-EN 13451-1-3
Complies with Standard
EN 13451-1
EN 13451-2



Grab rails, fixed in and out of the water

Polished AINSI-316 stainless steel. Ø 43 mm.

	Code	Standard Pack	Standard Weight in kg	Standard Volume in m³
For embedding				
2 units. Length 1,220 mm	**00034**	1	11.4	0.14
2 units. Length 1,524 mm	**00035**	1	13.0	0.16
With base plates (gaskets, wall plugs and screws)				
2 units. Length 1,220 mm	**00036**	1	12.2	0.21
2 units. Length 1,524 mm	**00037**	1	13.6	0.24



Grab rail fixed out of the water

In polished AISI-316L stainless steel (Ø 43 mm).

	Code	Standard Pack	Standard Weight in kg	Standard Volume in m³
For embedding	**07780**	1	6.7	0.118
With base plates (gaskets, wall plugs and screws)	**07781**	1	6.7	0.118

* 1 additional year warranty. For more information see the warranty certificate in the manual.

POOL ACCESS - ANCHORING SOCKETS AND HANDRAILS



Anchoring sockets

Made of plastic, with earth connection.

	Code	Standard Pack	Standard Weight in kg	Standard Volume in m^3
For Ø 43 mm pipe.	**00042**	50	7.0	0.03
For Ø 48 mm pipe.	**07661**	-	-	-



Articulated anchoring sockets

In polished Stainless Steel (AISI-304L) for a ladder with a Ø 43 mm pipe.

	Code	Standard Pack	Standard Weight in kg	Standard Volume in m^3
Articulated anchoring socket without base plate	**00043**	1	0.93	0.002
Articulated anchoring socket with base plate	**08727**	1	1.0	0.002



Removable anchoring socket with base plate

In polished stainless steel (AISI-316L) for a Ø 43 mm pipe with gaskets, wall plugs and screws.

	Code	Standard Pack	Standard Weight in kg	Standard Volume in m^3
Set of 2 units	**07331**	1	1.00	0.003



Anchor with locking bolts

Made of polished AISI-316L stainless steel. For a Ø 43 mm pipe.

	Code	Standard Pack	Standard Weight in kg	Standard Volume in m^3
Anchoring sockets	**00143**	2	1.2	0.003



Ladder foot pad

Made of plastic, the angle can be adjusted by rotating the eye ball socket. Recommended for liner pools.

	Code	Standard Pack	Standard Weight in kg	Standard Volume in m^3
For Ø 43 mm pipe.	**00045**	50	12.6	0.03
For Ø 28 mm pipes.	**00046**	50	14.0	0.03

+ info PDB Product Database
Further information on **PRODUCTS**
www.astralpool.com

POOL ACCESS - ANCHORING SOCKETS AND HANDRAILS



Stainless Steel Handrails

Polished Ø 43 mm AISI-316L stainless steel pipes. With fixing plates (including gaskets, screws and wall plugs).

	Code	Standard Pack	Standard Weight in kg	Standard Volume in m^3
Length 0.5 m	**00051**	2	2.8	0.02
Length 1 m	**00052**	2	4.3	0.04
Length 2 m	**00053**	2	7.9	0.09
Length 2.5 m	**00054**	2	9.5	0.11



Tee bar

Polished Ø 43 mm AISI-316L stainless steel pipes.

	Code	Standard Pack	Standard Weight in kg	Standard Volume in m^3
With fixing plates (including gaskets, screws and wall plugs).	**00056**	1	2.09	0.01



Equipotential anchor

New

The aim of this accessory for ladders is to solve the problem of not having the possibility to connect ground earth cable to ladders that do not have an anchoring on the pool beach.

It is mandatory by norms to connect metallic ladders to ground earth in order to have proper electrical connections. Moreover, it is highly recommended to avoid corrosion.

Equipotential anchor for ladders, manufactured in AISI-304L stainless steel and commercialized for concrete and liner pools. The anchors are composed of a recessed base on the ground, washer, screws and the equipotential bonding.

Each ladder needs to 2 units.

	Code	Standard Pack	Standard Weight in kg	Standard Volume in m^3
Concrete pools	**73318**	1	0.45	0.002
Liner pools	**73319**	1	0.50	0.002

POOL ACCESS - DISABLED ACCESS



Pal and Pal II portable chairs for disabled

Portable chair for disabled. No assembly required in pool deck area. The rechargeable 24V battery powers a mechanical actuator, ensuring that the chair is already ready for use. 30-Cycle duration once charged. The perfect solution for facilities with multiple pools as it can be set up anywhere along the pool deck and put away when not in use. Waterproof remote control. Easy to use, even for the end user. Just roll the chair to the edge of the pool, lock the wheels, set the stabilizers, and it is ready to use. Structure made of waterproof materials to prevent corrosion. Armrest and footrest included. The Pal makes any pool accessible in seconds. It is truly the easiest way to get everyone into the water.

	Code	Standard Pack	Standard Weight in kg	Standard Volume in m^3
PAL II chair. Counterweight in cement blocks.	**69444**	1	-	-

* Ask your AstralPool distributor about infinity pools, spas and other non-standard models.



Splash semi-portable lifting system for disabled people

Semi-portable chair installed on the pool deck for disabled people. Includes a cart to carry the chair in order to install it in different locations. Installation requires a ground anchor. Its 24 V rechargeable battery supplies power to a metallic actuator, ensuring that the device is always ready for use. Duration of 30 cycles once loaded. Waterproof remote control. The Splash is equipped with a water resistant structure to prevent corrosion and it has armrests and a footrest. Its load capacity of 136 kg and its 359° swivel makes it one of the most practical solutions for disabled access to the pool.

	Code	Standard Pack	Standard Weight in kg	Standard Volume in m^3
Splash Chair	**53924**	1	390	1.789



Hydraulic lift

It is made up of a structure made of polished Ø 43 mm AISI-316L stainless steel pipes to which the hydraulic mechanism supporting the chair is fitted. For the hydraulic mechanism to work there needs to be a water supply with a minimum pressure of 3.5 kg/cm^2.

	Code	Standard Pack	Standard Weight in kg	Standard Volume in m^3
Fully equipped lift				
with a 650-mm-long handrail	**71657**	1	-	-
with a 1000-mm-long handrail	**71658**	1	-	-
Optional:				
Headrest	**71185**	1	-	-
Foot rests	**71186**	1	-	-

INSTALLATION: The external attachment is by means of two fixed metallic anchors (supplied with the device) and two adjustable front supports, which make it possible to adjust the lift to the finishes of different swimming pools.

To make it easier for people that require a hydraulic lift chair to get in and out of leisure or hydrotherapy pools. Easy to assemble.

Min. swimming pool depth: 1 m

+ info PDB Product Database
Further information on **PRODUCTS**
www.astralpool.com

POOL ACCESS - DISABLED ACCESS



Min. swimming pool depth: 1.5 m

For pools shallower than 1.5 m please ask your dealer.

Hydraulic lift

It is made up of a structure made of polished Ø 43 mm AISI-316L stainless steel pipes to which the hydraulic mechanism supporting the chair is fitted, and a ladder at the side for the assistant. For the hydraulic mechanism to work there needs to be a water supply with a minimum pressure of 3.5 kg/cm^2.

	Code	Standard Pack	Standard Weight in kg	Standard Volume in m^3
L-650 Railings	**28619**	1	18.7	0.253
L-1000 Railings	**28620**	1	35.5	0.383
Cylinder	**28621**	1	13.8	0.042
Accessories	**28622**	**1**	18.3	0.178

INSTALLATION: The external attachment is by means of two fixed metallic anchors (supplied with the device) and two adjustable front supports, which make it possible to adjust the lift to the finishes of different swimming pools.

To make it easier for people that require a hydraulic lift chair to get in and out of leisure or hydrotherapy pools. Easy to assemble.



We also supply the pipes and components needed to install grab rails or other decorative features around the edge of pools.

500 mm width model

Made of polished Ø 43 mm AISI-316L stainless steel pipes. Plastic non-slip steps. Supplied with anchoring fixtures and earth connection.

	Code	Standard Pack	Standard Weight in kg	Standard Volume in m^3
4 steps	**00116**	1	28.0	0.300
5 steps	**00117**	1	40.9	0.300
6 steps	**00118**	1	47.5	0.370
7 steps	**00119**	1	51.4	0.370
8 steps	**00120**	1	48.0	1.057

970 mm width model

Made of polished Ø 43 mm AISI-316L stainless steel pipes. Plastic non-slip steps. Supplied with anchoring fixtures and earth connection.

	Code	Standard Pack	Standard Weight in kg	Standard Volume in m^3
4 steps	**00116 + 4 Kit 28615**	1	-	-
5 steps	**00117 + 5 Kit 28615**	1	-	-
6 steps	**00118 + 6 Kit 28615**	1	-	-
7 steps	**00119 + 7 Kit 28615**	1	-	-
8 steps	**00120 + 8 Kit 28615**	1	-	-



Step kit for converting a ladder's width from 500 to 970 mm

To convert the ladder from 500 mm to 970 mm, one "Step kit" is required for each of the steps of the ladder. It is made of polished AISI-316L stainless steel pipes, with plastic non-slip steps.

	Code	Standard Pack	Standard Weight in kg	Standard Volume in m^3
Step kit	**28615**	1	5.9	0.027

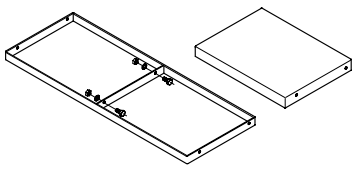

HANDRAILS

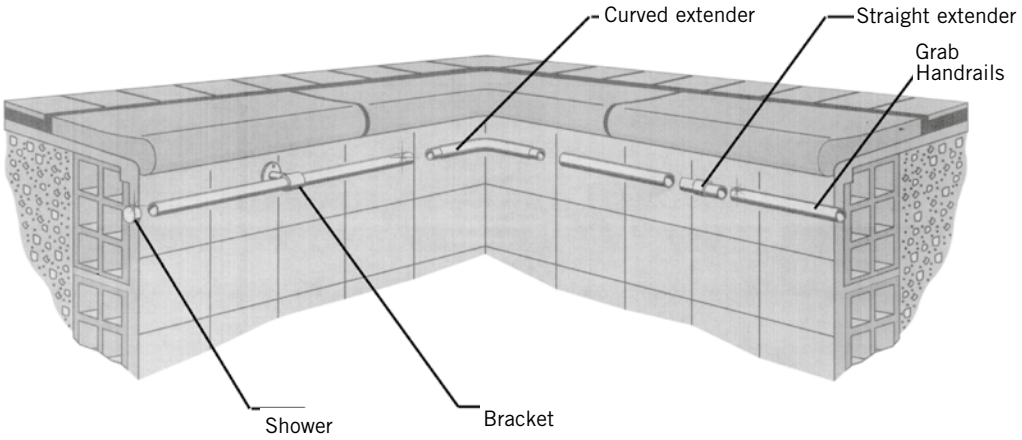



Straight handrails

In polished AISI-316L stainless steel pipe (Ø 43 mm). The length required must be ordered.

	Code	Standard Pack	Standard Weight in kg	Standard Volume in m^3
With sealed ends	**05545**	1	1.5	0.002
With open ends	**19946**	1	1.3	0.002
With one end sealed and the other open	**20092**	1	1.3	0.002



Straight handrail connector

Made of polished AISI-316L stainless steel. For joining Ø 43 mm stainless steel pipes.

	Code	Standard Pack	Standard Weight in kg	Standard Volume in m^3
Straight handrail connector	**09452**	1	0.32	0.001



Curved connector

Made of polished AISI-316L stainless steel. For joining Ø 43 mm pipes.

	Code	Standard Pack	Standard Weight in kg	Standard Volume in m^3
Curved connector	**11286**	1	0.3	0.001



End Caps

For the end of Ø 43 mm handrail pipes. Made of polished AISI-316L stainless steel.

	Code	Standard Pack	Standard Weight in kg	Standard Volume in m^3
Shower	**08014**	1	0.1	0.001

+ info PDB Product Database
Further information on **PRODUCTS**
www.astralpool.com

HANDRAIL ATTACHMENT SUPPORT



Bracket closed at one end

Made of AISI-316L stainless steel for Ø 43 mm handrails. Supplied with screws, gasket and wall plugs.

	Code	Standard Pack	Standard Weight in kg	Standard Volume in m^3
Bracket closed at one end	**07789**	2	0.6	0.002



90° Angle handrail support

Made of AISI-316L stainless steel for Ø 43 mm handrails. Supplied with screws, gasket and wall plugs.

	Code	Standard Pack	Standard Weight in kg	Standard Volume in m^3
90° Angle handrail support	**11143**	1	1.17	0.002



Adaptor kit for liner swimming pools.

Made of AISI-316L stainless steel.

	Code	Standard Pack	Standard Weight in kg	Standard Volume in m^3
Adaptor kit for liner swimming pools.	**26172**	1	0.3	0.002



Split bracket

For Ø 43 mm pipe. Made of polished AISI-316L stainless steel. Supplied with screws and wall plugs (concrete swimming pools) and gasket and screws (liner swimming pools).

	Code	Standard Pack	Standard Weight in kg	Standard Volume in m^3
Concrete swimming pool	**25342**	2	0.72	0.002
Liner swimming pool	**28618**	2	1.40	0.002



Straight bracket with base plate

Made of AISI-316L polished stainless steel for Ø 43 mm handrails. Supplied with screws, gasket and wall plugs.

	Code	Standard Pack	Standard Weight in kg	Standard Volume in m^3
Straight bracket with base plate	**08013**	2	0.5	0.002

LIFEGUARD CHAIRS



Lifeguard chair

Made with polished Ø 43 mm AISI-304L stainless steel pipes. The steps, platform and chair are made of plastic. The base bar has wheels.

	Code	Standard Pack	Standard Weight in kg	Standard Volume in m³
Lifeguard chair	**56993**	1	55.6	0.52
Lifebuoy holder	**56994**	1	0.6	0.03
Sunshade bracket	**56995**	1	0.6	0.01



56994



56995



H-400 quick access lifeguard chair

Made of polished Ø 43 mm AISI-304L stainless steel pipes. The steps, platform and chair are made of plastic. Large platform and 90º rotating seat to increase the range of vision. Ideal for children's or paddling pools. Includes bracket for sunshade.

	Code	Standard Pack	Standard Weight in kg	Standard Volume in m³
H-400 lifeguard chair	**15673**	1	39.6	0.66



Multipurpose H-1000 lifeguard chair

Made of polished Ø 43 mm AISI-304L stainless steel pipes. The steps, platform and chair are made of plastic. Large platform and 90º rotating seat to increase the range of vision. Includes bracket for sunshade.

	Code	Standard Pack	Standard Weight in kg	Standard Volume in m³
H-1000 lifeguard chair	**15674**	1	65.0	1.64

LIFE-SAVING ACCESSORIES



Lifebuoy holder

Made of AISI-316L stainless steel with connection to telescopic handles 01361, 01362, 01363 and 15838 by means of wing nuts.

	Code	Standard Pack	Standard Weight in kg	Standard Volume in m³
Lifebuoy holder	**01368**	1	1.46	0.03



Lifebuoy

Made of Styropor covered with orange canvas, Ø 700 mm.

	Code	Standard Pack	Standard Weight in kg	Standard Volume in m³
Lifebuoy	**01369**	6	18.0	0.330



Lifebuoy holder

Made of polished AISI-304L stainless steel. It can be hung on the wall or fitted to a lifebelt holder post (code 01371). It is supplied with wall plugs and screws.

	Code	Standard Pack	Standard Weight in kg	Standard Volume in m³
Lifebuoy holder	**01370**	1	1.16	0.004

+ info PDB Product Database
Further information on **PRODUCTS**
www.astralpool.com

LIFE-SAVING ACCESSORIES



Lifebelt holder post

In polished AISI-316L stainless steel (Ø 43 mm). Baseplate with 3 holed. Supplied with flexible seal, wall plugs and screws.

	Code	Standard Pack	Standard Weight in kg	Standard Volume in m^3
Lifebelt holder post	**01371**	1	3.0	0.01

SHOWERS - SHOWERS WITH TIMERS



Shower with timer and 4 shower heads

AISI-304L polished stainless steel shower, specially designed for high footfall facilities (public or semi-public pools). AstralPool showers for public facilities are characterised by their highly resistant materials, considered vandal-proof, and the water savings made thanks to their built-in flow limiters. Showerhead height from floor: 2 m. Fastened to floor with screws, with anchoring fixture incorporated. Fastens to ground with screws and includes an anchoring fixture.

	Code	Standard Pack	Standard Weight in kg	Standard Volume in m^3
Shower with timer and 4 shower heads	**59779**	1	18.7	0.166



SHOWERHEADS



TIMER SWITCHES

SHOWERS - SHOWER TUNNELS



Shower tunnel with arch

For swimming pool entrances. Made of polished AISI-304L stainless steel pipe with a diameter of 28 mm. Supplied with wall plugs and screws.

	Code	Standard Pack	Standard Weight in kg	Standard Volume in m^3
1 Arch with 3 shower heads. Width 1.2 m	**00100**	1	9,6	0.10
1 Arch with 5 shower heads. Width 2 m	**19948**	1	10.4	0.14



SHOWERHEAD

SHOWERS - SHOWER TUNNELS



Control column

Made of AISI-304L stainless steel. The control the automatic opening and closing of the water circuit. It includes the following elements: a 220V/24V transformer, a photoelectric timer cell and an electro valve. It is supplied with wall plugs and screws.

	Code	Standard Pack	Standard Weight in kg	Standard Volume in m^3
Control column	**00102**	1	7.0	0.02

SHOWERS - OUTDOOR FOOTBATHS



Footwash for public use

Footwash tray measuring 2 x 1 m, for public use. Made of polyester resin and fibreglass. Finished with Gelcoat.
Specifications:
- Drain grille 3/8”
- Overflow and water inlet connection 3/8”.
- Non-slip surface incorporated in the polyester.
- Angled tray to avoid water build-up.

	Code	Standard Pack	Standard Weight in kg	Standard Volume in m^3
Blue colour	**21255**	1	30.0	0.91
White colour	**21255CL07**	1	30.0	0.91



Dosing recipient

Designed to be installed in the footwash (screwed or glued) as a recipient for a 200 g Chlorine tablet that dissolves gradually and disinfects the water. Includes locking screws to prevent undue opening as well as for ensuring user safety.

	Code	Standard Pack	Standard Weight in kg	Standard Volume in m^3
Dosing recipient	**25356**	-	-	-

ASTRALPOOL BIKE



AstralPool Bike

Aquabike made of square and rectangular polished AISI-316L stainless steel pipe. Ideal for gyms, wellness centres, spas, medical facilities, hotels and private pools.
- Made of AISI-316L stainless steel.
- Adjustable height of saddle and handlebar.
- For use in public and residential pools from 1 to 1.5 metres in depth.
- Ergonomic.
- Pedals made of PUR.
- Easy to move about.

	Code	Standard Pack	Standard Weight in kg	Standard Volume in m^3
AstralPool Bike	**67333**	1	20	0.12

NOTE: The water features do not include a pump, control box or suction pipes.

WATER GAMES AND ORNAMENTAL WATER FEATURES

Range of cascades for residential pools made of AISI-316L stainless steel. The range is made up of three cascades in an outstanding modern design. Polished or matt finish.
All models come with anchoring. A ½ HP pump is recommended (code 38769).



Classic water curtain

	Code	Standard Pack	Standard Weight in kg	Standard Volume in m^3
Classic water curtain	**57095**	1	28	0.38



Straight water curtain

	Code	Standard Pack	Standard Weight in kg	Standard Volume in m^3
Straight water curtain	**57096**	1	36	0.25



One water curtain

	Code	Standard Pack	Standard Weight in kg	Standard Volume in m^3
One water curtain	**57097**	1	36	0.25



RECOMMENDED

Victoria Plus Silent pump

See P.174



Residential water curtain

Residential water curtain in polished stainless steel. Fastened to the ground with screws and anchor studs.

	Code	Standard Pack	Standard Weight in kg	Standard Volume in m^3
A-350 AISI-316L stainless steel, 12 m^3/h 2 mca	**52244**	1	10	0.12
A-500 AISI-316L stainless steel, 18 m^3/h 2 mca	**52245**	1	15	0.24

Code	Suction concrete	Pump	Control box	*Optional Push button + Switch
52244	00302 x 2	38771	25719	04047 + 04050
52245	00302 x 2	38773	25719	04047 + 04050

* Optional: components for turning the waterfall on from the pool.

NOTE: The water features do not include a pump, control box or suction pipes.

WATER GAMES AND ORNAMENTAL WATER FEATURES

Residential water cannon



52242

52243

Residential water cannon in polished stainless steel. Fastened to the ground with screws and anchor studs.

	Code	Standard Pack	Standard Weight in kg	Standard Volume in m³
AISI-316L stainless steel				
Round opening. 5 m³/h, 2 mca	**52242**	1	3	0.12
Flat opening. 15 m³/h, 2 mca	**52243**	1	5	0.13
AISI-304L stainless steel				
Round opening. 5 m³/h, 2 mca	**52238**	1	3	0.12
Flat opening. 15 m³/h, 2 mca	**52239**	1	5	0.13

Code	Suction concrete	Pump	Control box	*Optional Push button + Switch
52242	00302	38769	25718	04047 + 04050
52243	00302 x 2	38771	25719	04047 + 04050
52238	00302	38769	25718	04047 + 04050
52239	00302 x 2	38771	25719	04047 + 04050

*Optional: components for turning the cannon on from the pool.

Ornamental waterfalls



In AISI-316L stainless steel.

	Code	Standard Pack	Standard Weight in kg	Standard Volume in m³
Width (W) 300 mm. 1½" connection (B)	**05577**	1	6.9	0.06
Width (W) 600 mm, 2" connection (B)	**05578**	1	11.9	0.09

Water feature code	Face plate	Anchoring sockets		Suction		Pump	Control box		
		Concrete	Liner	Concrete	Liner		Manual push button	Pneumatic push button	
								Concrete	Liner
05577	-	-	-	**19987** x 1	**20091** x 1	**38770**	**19988**	**07669**	**07868**
05578	-	-	-	**19987** x 2	**20091** x 2	**38776**	**19989**	**17154**	**17155**

Note: The pneumatic push button includes: control box, wall conduits and push button.



SilkFlow waterfalls

Waterfall made of corrosion resistant ABS. Can be fed through the return circuit of the pool filter or through a specific pump.

	Code	Standard Pack	Standard Weight in kg	Standard Volume in m³
300 mm waterfall	**45205**	1	1.19	0.012
600 mm waterfall	**45206**	1	2.36	0.021
900 mm waterfall	**45207**	1	3.45	0.003
1200 mm waterfall	**45208**	1	4.62	0.004
1800 mm waterfall	**54090**	1	7.0	0.057

Code	Required water flow l/min	Standard pump size HP	A Length of waterfall	B Width of waterfall over the pool surface, at the recommended rate of l/min/m	C Recommended height for the waterfall	D Distance of the water at the recommended rate of l/min/m
45205	50	0,5	300 mm	200 mm	300 mm	300 mm
45206	100	0,5	600 mm	500 mm	600 mm	300 mm
45207	150	0,75	900 mm	800 mm	900 mm	300 mm
45208	200	0,75	1200 mm	1100 mm	900 mm	300 mm
54090	300	1,50	1800 mm	1700 mm	900 mm	300 mm

NOTE: The water features do not include anchoring, pump, control panel nor suction system.

WATER GAMES AND ORNAMENTAL WATER FEATURES



Cobra Curtain

Height: 1.2 m. Width 600 mm. AISI-316L stainless steel.

	Code	Standard Pack	Standard Weight in kg	Standard Volume in m^3
Matt finish	**19972**	1	23.2	0.630
Painted in white	**19973**	1	23.2	0.630



Boa Curtain

Height: 1.2 m. Width 340 mm. AISI-316L stainless steel.

	Code	Standard Pack	Standard Weight in kg	Standard Volume in m^3
Bright polished	**19974**	1	11.2	0.278



Luxe Curtain

Height: 0.9 m. AISI-316L stainless steel.

	Code	Standard Pack	Standard Weight in kg	Standard Volume in m^3
Bright polished	**19975**	1	60.0	0.547



Arched Curtain

AISI-316L stainless steel matt finish.

	Code	Standard Pack	Standard Weight in kg	Standard Volume in m^3
Width 600 mm, Height 800 mm	**20129**	1	34.1	0.247
Width 600 mm, Height1000 mm	**20130**	1	62.0	0.547
Width 1000 mm, Height 1000 mm	**20131**	1	106.5	1.044

19972-19973

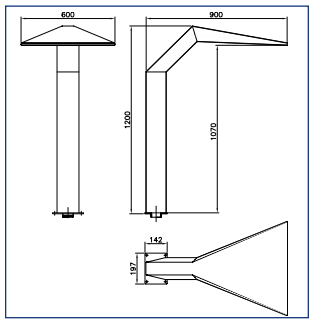

19974

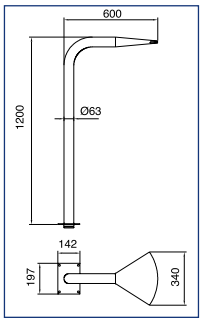

19975

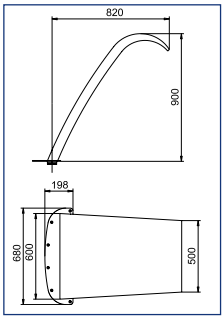

20129

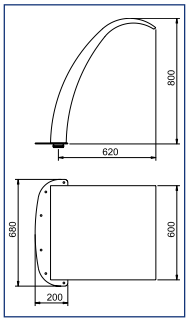

20130

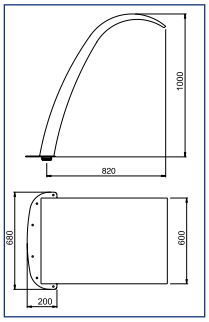

20131

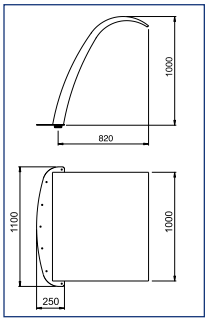

Curtain code	Faceplate	Anchoring sockets	Suction		Pump	Control box		
		Concrete	Concrete	Liner		Manual push button	Pneumatic push button	
							Concrete	Liner
19972	19981	19983	19987 x 3	20091 x 3	38780	19990	07537	07867
19973	19982	19983	19987 x 3	20091 x 3	38780	19990	07537	07867
19974	19977	19983	19987 x 2	20091 x 2	38776	19989	17154	17155
19975	–	19985	19987 x 3	20091 x 3	38780	19990	07537	07867
20129	–	19985	19987 x 3	20091 x 3	38780	19990	07537	07867
20130	–	19985	19987 x 3	20091 x 3	38780	19990	07537	07867
20131	–	20135	19987 x 3	20091 x 3	38780	19990	07537	07867

Note: The pneumatic push button includes: control box, wall conduits and push button.

NOTE: The water features do not include anchoring, pump, control panel nor suction system.

WATER GAMES AND ORNAMENTAL WATER FEATURES



Swan Curtain 450

In AISI-316L stainless steel.

Matt finish

Code	Standard Pack	Standard Weight in kg	Standard Volume in m³
34387	1	27.7	0.356

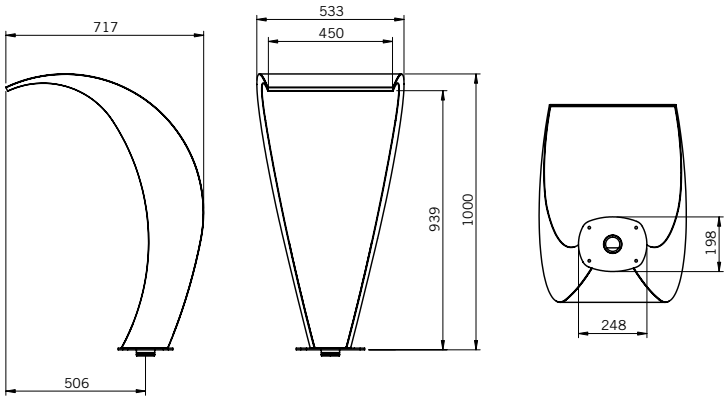



Swan Curtain 1000

In AISI-316L stainless steel.

Matt finish

Code	Standard Pack	Standard Weight in kg	Standard Volume in m³
34390	1	38.2	0.872

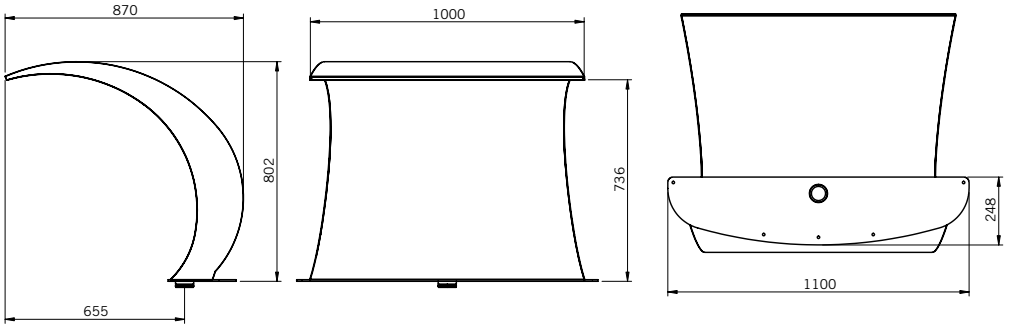

Curtain code	Anchoring sockets	Suction		Pump	Control box		
					Manual push button	Pneumatic push button	
	Concrete	Concrete	Liner			Concrete	Liner
34387	19983	19987 x 2	20091 x 2	38776	19989	17154	17155
34390	20135	19987 x 3	20091 x 3	38780	19990	07537	07867

Note: The pneumatic push button includes: control box, wall conduits and push button.

NOTE: The water features do not include anchoring, pump, control panel nor suction system.



WATER GAMES AND ORNAMENTAL WATER FEATURES

Cannons

In AISI-316L polished stainless steel (cannon only, no nozzles) Ø 50mm pipe. Height 1.2 m

	Code	Standard Pack	Standard Weight in kg	Standard Volume in m^3
	19968	1	7.2	0.193

Interchangeable nozzles

		Code	Standard Pack	Standard Weight in kg	Standard Volume in m^3
	**Nozzle No 1**	**05572**	1	0.66	0.003
	**Nozzle No 2**	**05573**	1	0.46	0.003
	**Nozzle No 3**	**05574**	1	0.56	0.003
	**Nozzle No 4**	**05575**	1	0.81	0.003



Vertical

In polished AISI-316L Stainless Steel. Pipe: Ø 84 mm. Height 1.5 m.

	Code	Standard Pack	Standard Weight in kg	Standard Volume in m^3
Single	**19969**	1	10	0.080

NOTE: The water features do not include anchoring, pump, control panel nor suction system.

WATER GAMES AND ORNAMENTAL WATER FEATURES



Bell

In AISI-316L stainless steel. Pipe: Ø 63 mm. Height 1.2 m.

Code	Standard Pack	Standard Weight in kg	Standard Volume in m³
19971	1	9.2	0.274



Deluxe Cannon

Stainless Steel polished AISI-316L. Pipe: Ø 63 mm. Height: 0.8 mm.

		Code	Standard Pack	Standard Weight in kg	Standard Volume in m³
	**Flat**	**19970**	1	8.2	0.211
	**Circular**	**20132**	1	9.4	0.209
	**6 outlets**	**20133**	1	8.6	0.213

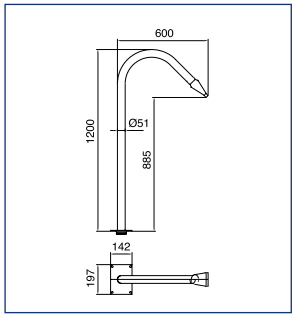

19968

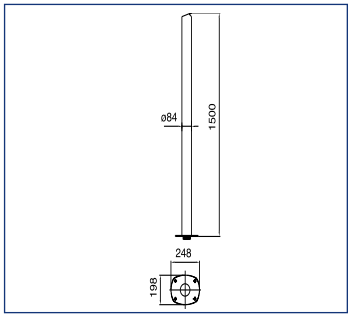

19969

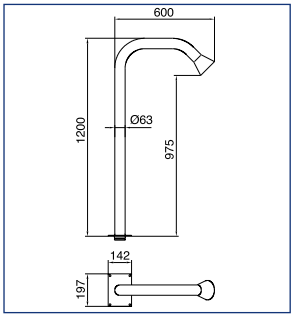

19971

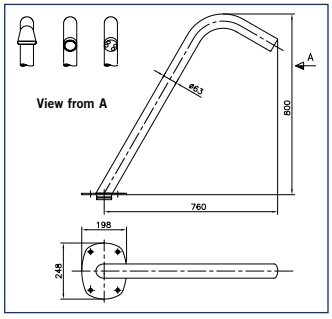

19970-20132-20133

Code water feature	Face plate	Anchoring sockets	Suction		Pump	Control box		
		Concrete	Concrete	Liner		Manual push button	Pneumatic push button	
							Concrete	Liner
19968	19976	19983	19987 x 1	20091 x 1	38770	19988	07669	07868
19969	19978	19983	19987 x 1	20091 x 1	38770	19988	07669	07868
19970	–	19983	19987 x 1	20091 x 1	38770	19988	07669	07868
19971	19977	19983	19987 x 2	20091 x 2	38776	19989	17154	17155
20132	–	19983	19987 x 1	20091 x 1	38770	19988	07669	07868
20133	–	19983	19987 x 1	20091 x 1	38770	19988	07669	07868

Note: The pneumatic push button includes: control box, wall conduits and push button.

NOTE: The water features do not include anchoring, pump, control panel nor suction system.

WATER GAMES AND ORNAMENTAL WATER FEATURES



Mushrooms

In AISI-316L polished stainless steel. Column Ø 129 mm. Height 2.3 m

	Code	Standard Pack	Standard Weight in kg	Standard Volume in m³
Mushroom Ø 285 mm	**19966**	1	24.8	0.273

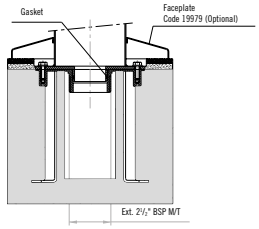

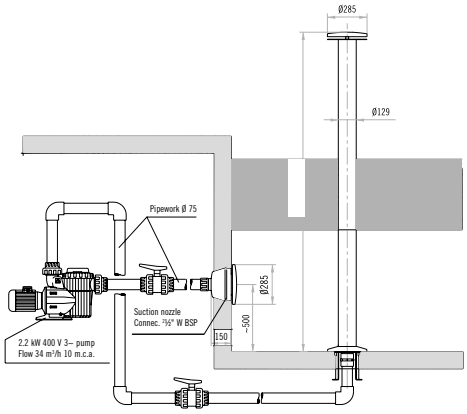

Code water feature	Face plate	Anchoring sockets		Suction		Pump	Control box		
		Concrete	Liner	Concrete	Liner		Manual push button	Pneumatic push button	
								Concrete	Liner
19966	19979	19983	15833	19987 x 3	20091 x 3	38780	19990	07537	07867

Note: The pneumatic push button includes: control box, wall conduits and push button.



Umbrellas

In AISI-316L Stainless Steel polished column. Umbrella in polyester

	Code	Standard Pack	Standard Weight in kg	Standard Volume in m³
Umbrella S, Ø 1100 mm	**22750**	1	30.0	0.450
Umbrella M, Ø 1500 mm	**22751**	1	85.0	1.900
Umbrella L, Ø 2000 mm	**22752**	1	110.0	2.400
Umbrella XL, Ø 2500 mm	**22753**	1	130.0	3.500
Column Ø 129 mm	**22754**	1	23.4	0.274
Column Ø 254 mm	**22755**	1	55.8	0.507

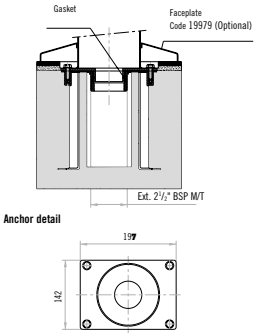

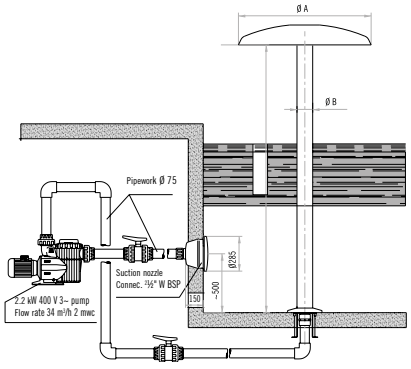

Parasol Ø	Canopy	Column	Face plate	Anchoring sockets		Suction		Pump	Control box		
				Concrete	Liner	Concrete	Liner		Manual push button	Pneumatic push button	
										Concrete	Liner
1100	22750	22754	19979	19983	15833	19987 x 3	20091 x 3	38780	19990	07537	07867
1500	22751	22755	19980	19984	19986	19987 x 4	20091 x 4	08003	19991	–	–
2000	22752	22755	19980	19984	19986	19987 x 4	20091 x 4	08003	19991	–	–
2500	22753	22755	19980	19984	19986	19987 x 5	20091 x 5	08004	19992	–	–

Note: The pneumatic push button includes: control box, wall conduits and push button.

NOTE: The water features do not include anchoring, pump, control panel nor suction system.

WATER GAMES AND ORNAMENTAL WATER FEATURES



Water Mushroom Ø 250 mm

In AISI-316L stainless steel. Its fastening system allows it to be fitted in concrete or prefabricated pools. Column Ø 104 mm. Height 385 mm

	Code	Standard Pack	Standard Weight in kg	Standard Volume in m³
Matt finish	**34378**	1	5.4	0.34



Water Mushroom Ø 400 mm

Made of AISI-316L. It has been designed for installing in prefab. and concrete pools. Column Ø 129 mm. Height 460 mm.

	Code	Standard Pack	Standard Weight in kg	Standard Volume in m³
Matt finish	**34381**	1	9.6	0.124



Water Mushroom Ø 670 mm

Made of AISI-316L. It has been designed for installing in prefab. and concrete pools. Column Ø 168 mm. Height 600 mm.

	Code	Standard Pack	Standard Weight in kg	Standard Volume in m³
Matt finish	**34384**	1	24.5	0.377

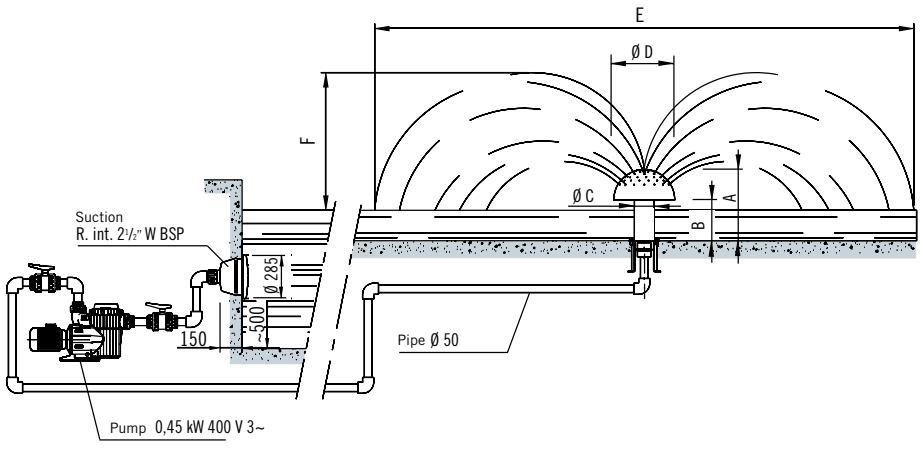

Size in cm						Feature code	Anchoring sockets		Suction		Pump	Control box		
Mushroom Ø	A	B	Ø C	E	F		Concrete	Liner	Concrete	Liner		Manual push button	Pneumatic push button	
													Concrete	Liner
250	385	270	104	5000	1500	**34378**	19983	15833	19987x1	20091x1	38770	19988	07669	07868
400	460		129	6600	1700	**34381**								
670	600		168	7000	1800	**34384**								

Note: The pneumatic push button includes: control box, wall conduits and push button.

NOTE: The water features do not include anchoring, pump, control panel nor suction system.

WATER GAMES AND ORNAMENTAL WATER FEATURES

Concrete pool wall suction point



In AISI-316L Stainless Steel. Ø 285 mm. Suction point for water features. Connection 2½". Max. Recommended flow: 13 m³/h.

	Code	Standard Pack	Standard Weight in kg	Standard Volume in m³
Concrete swimming pool	**19987**	1	2.9	0.018

Prefabricated and liner pool wall suction point



In AISI-316L Stainless Steel. Ø 285 mm. Suction point for water features. Connection 2½". Max. Recommended flow: 13 m³/h.

	Code	Standard Pack	Standard Weight in kg	Standard Volume in m³
Prefabricated and liner pool	**20091**	1	2.9	0.018

Anchoring for liner pools



19983

In AISI-316L Stainless Steel. Includes base for embedding, fixing plate, gaskets and earth connection. Connection 2½".

	Code	Standard Pack	Standard Weight in kg	Standard Volume in m³
Rectangular anchoring	**19983**	1	2.1	0.012
Ø 254 mm anchoring	**19984**	1	9.8	0.113
600 mm wide anchoring	**19985**	1	6.4	0.039
1000 mm wide anchoring	**20135**	1	10.8	0.076

Anchoring for liner pools



15833

In AISI-316L Stainless Steel. Includes base for embedding, fixing plate, 3 gaskets and earth connection. Connection 2½".

	Code	Standard Pack	Standard Weight in kg	Standard Volume in m³
Rectangular anchoring	**15833**	1	2.5	0.007
Ø 254 mm anchoring	**19986**	1	11.0	0.400



19986

NOTE: The water features do not include anchoring, pump, control panel nor suction system.

WATER GAMES AND ORNAMENTAL WATER FEATURES

Base cover



In polished AISI-316L stainless steel.

	Code	Standard Pack	Standard Weight in kg	Standard Volume in m^3
Ø 51 mm	**19976**	1	1.0	0.008

Base cover



In polished AISI-316L stainless steel.

	Code	Standard Pack	Standard Weight in kg	Standard Volume in m^3
Ø 63 mm	**19977**	1	1.0	0.008

Base cover



In polished AISI-316L stainless steel.

	Code	Standard Pack	Standard Weight in kg	Standard Volume in m^3
Ø 84 mm	**19978**	1	0.9	0.006

Base cover



In polished AISI-316L stainless steel.

	Code	Standard Pack	Standard Weight in kg	Standard Volume in m^3
Ø 129 mm	**19979**	1	0.9	0.005

Base cover



In polished AISI-316L stainless steel.

	Code	Standard Pack	Standard Weight in kg	Standard Volume in m^3
Ø 254 mm	**19980**	1	0.9	0.006

NOTE: The water features do not include anchoring, pump, control panel nor suction system.

WATER GAMES AND ORNAMENTAL WATER FEATURES



Base cover

	Code	Standard Pack	Standard Weight in kg	Standard Volume in m^3
600 mm curtain. Matt finish	**19981**	1	1.22	0.008



Base cover

	Code	Standard Pack	Standard Weight in kg	Standard Volume in m^3
600 mm curtain. Painted	**19982**	1	1.28	0.008



CE

Control box – Manual

	Code	Standard Pack	Standard Weight in kg	Standard Volume in m^3
Manual - control box				
0.45 kW (0.5 HP) 400 V III	**19988**	1	0.7	0.005
1.1 kW (1.5 HP) 400 V III	**19989**	1	0.7	0.005
2.2 kW (3.0 HP) 400 V III	**19990**	1	0.7	0.005
2.65 kW (3.5 HP) 400 V III	**19991**	1	0.7	0.005



Control box pneumatic switch

Enables bathers to control water features from inside the pool. Includes control box, wall conduit, air pipe and pneumatic switch.

	Code	Standard Pack	Standard Weight in kg	Standard Volume in m^3
For concrete pool				
2.2 kW (3.0 HP) 400 V III	**07537**	1	3.1	0.02
0.45 kW (0.5 HP) 400 V III	**07669**	1	3.1	0.02
1.1 kW (1.5 HP) 400 V III	**17154**	1	3.1	0.02
For prefabricated pools				
2.2 kW (3.0 HP) 400 V III	**07867**	1	3.2	0.02
0.45 kW (0.5 HP) 400 V III	**07868**	1	3.2	0.02
1.1 kW (1.5 HP) 400 V III	**17155**	1	3.2	0.02

All products must be installed at a depth of 30–40 cm. See the technical specifications on the following pages.

WATER GAMES AND ORNAMENTAL WATER FEATURES

Water features help to create a leisure space where you can enjoy water activities in a fun, safe and physically active environment with your family.



Hydra

Body of polyester reinforced with fiberglass.
Outlet nozzles made of stainless steel AISI-304L.
Hardware made of S.S. AISI-304L.

	Code	Standard Pack	Standard Weight in kg	Standard Volume in m^3
Hydra	**66450**	1	-	-



Crux

Body of polyester reinforced with fiberglass.
Outlet nozzles are made of stainless steel AISI-304L and polyacetal.
Hardware made of S.S. AISI-304L.

	Code	Standard Pack	Standard Weight in kg	Standard Volume in m^3
Crux	**66449**	1	-	-



Corvus

Body of polyester reinforced with fiberglass.
Outlet nozzles made of polyacetal (POM).
Hardware made of S.S. AISI-304L.

	Code	Standard Pack	Standard Weight in kg	Standard Volume in m^3
Corvus	**66451**	1	-	-



Rainbow Sunshade

Bodywork in polyester reinforced with fibreglass. AISI-304L stainless steel shaft.
Outlet nozzles made of stainless steel AISI-304L.
Hardware made of S.S. AISI-304L.

	Code	Standard Pack	Standard Weight in kg	Standard Volume in m^3
Rainbow Sunshade	**66452**	1	-	-



Palm

Shape made of polyester reinforced with fiberglass.
Body made of stainless steel AISI-304L.
Outlet nozzles made of polyacetal (POM).
Hardware made of S.S. AISI-304L.

	Code	Standard Pack	Standard Weight in kg	Standard Volume in m^3
Palm	**66453**	1	-	-



Bow

Body made of stainless steel AISI-304L.
Polyacetal sprinklers.
Hardware made of stainless steel.

	Code	Standard Pack	Standard Weight in kg	Standard Volume in m^3
Bow	**66456**	1	-	-

All products must be installed at a depth of 30–40 cm. See the technical specifications on the following pages.

WATER GAMES AND ORNAMENTAL WATER FEATURES



Lamppost

Baskets made of fibreglass.
Body made of stainless steel AISI-304L.
Outlet nozzles are made of stainless steel AISI-304L.
Hardware made of stainless steel AISI-304L.

	Code	Standard Pack	Standard Weight in kg	Standard Volume in m^3
Lamppost	**66454**	1	-	-



Streetlight

Shape made of polyester reinforced with fiberglass.
Body made of stainless steel AISI-304L.
Outlet nozzles made of stainless steel AISI-304L.
Hardware made of stainless steel AISI-304L.

	Code	Standard Pack	Standard Weight in kg	Standard Volume in m^3
Streetlight	**66455**	1	-	-



Rainbow Mini Slide

Slide made of polyester reinforced with fiberglass.
Panels made of 20 mm high density polythene.
Hardware made of stainless steel AISI-304L.

	Code	Standard Pack	Standard Weight in kg	Standard Volume in m^3
Rainbow Mini Slide	**66457**	1	-	-



Whale Mini Slide

Slide made of polyester reinforced with fiberglass.
Panels made of 20 mm high density polythene.
Hardware made of stainless steel AISI-304L.

	Code	Standard Pack	Standard Weight in kg	Standard Volume in m^3
Whale Mini Slide	**66458**	1	-	-



Atlantic

Slide made of polyester reinforced with fiberglass.
Posts made of AISI-304L stainless steel, coated in polyester paint.
High-density 15 mm polyethylene panels.
Outlet nozzles are made of stainless steel AISI-304L and polyacetal.
Hardware made of stainless steel AISI-304L.

	Code	Standard Pack	Standard Weight in kg	Standard Volume in m^3
Atlantic	**66459**	1	-	-

+ info PDB Product Database
Further information on **PRODUCTS**
www.astralpool.com

WATER GAMES AND ORNAMENTAL WATER FEATURES

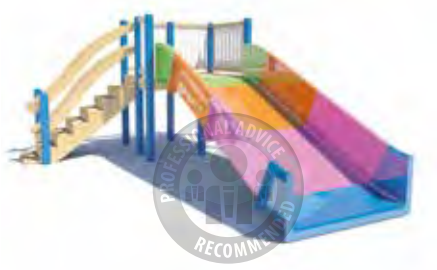

Article to be installed at poolside at a depth of at least 110 cm.

Active

Slide made of polyester reinforced with fiberglass.
Wooden posts.
Panels made of 20 mm high density polythene.
Handrail and fasteners made of AISI-304L stainless steel.
Baseplates made of AISI-304L stainless steel.

	Code	Standard Pack	Standard Weight in kg	Standard Volume in m^3
Active	**66460**	1	-	-





This product must be installed at a depth of 30–40 cm.

Bubbles

Slide made of polyester reinforced with fiberglass.
Posts made of AISI-304L stainless steel, coated in polyester paint.
High-density 15 mm polyethylene panels
Outlet nozzles made of polyacetal (POM).
Hardware made of stainless steel AISI-304L.

	Code	Standard Pack	Standard Weight in kg	Standard Volume in m^3
Bubbles	**66461**	1	-	-

TECHNICAL FEATURES

Code	Name	Floor plan dimensions (cm)	Maximum height of water feature (cm)	Required flow rate (l/min)	Pressure (bar)
66450	**Hydra**	Ø 87	161.5	120	1
66449	**Crux**	130 x 50	140	130	1
66451	**Corvus**	60 x 60	163.5	47	1
66452	**Sunshade Rainbow**	Ø 160	289.5	400	1
66453	**Palm**	Ø 223	350	120	1
66456	**Bow**	320	160	70	1
66454	**Lamppost**	Ø 79	345	120	1
66455	**Streetlight**	Ø 198	360	360	1
66457	**Rainbow Mini Slide**	279 x 630	105	-	-
66458	**Whale Mini Slide**	276 x 660	101	-	-
66459	**Atlantic**	331 x 108	412	850	1
66460	**Active**	575 x 423	275	48	1
66461	**Bubbles**	660 x 582	375	400	1

+ info PDB Product Database
Further information on **PRODUCTS**
www.astralpool.com

WATER GAMES AND ORNAMENTAL WATER FEATURES



Wave Splash bucket

Designed and manufactured according to the standards EN-1176. It has nozzles embedded and rotating parts that avoid grips and entrapments in order to ensure maximum safety.

Used materials:

- AISI-304L stainless steel painted with powder coating of polyester, matt finish and treaty against the heat.
- Drive nozzles made of synthetic polymer POM.
- AISI-304L stainless steel hardware vandal-proof.
- Feet protection to prevent children from damage.

	Code	Standard Pack	Standard Weight in kg	Standard Volume in m^3
Lamppost	**IS-30A47**	1	-	-

READY FOR FUN?

It is a game whose main feature is the surprise factor. Children do not know when the cube is filled and overturn on them all the water it contains. It is specially designed for older children or young people.

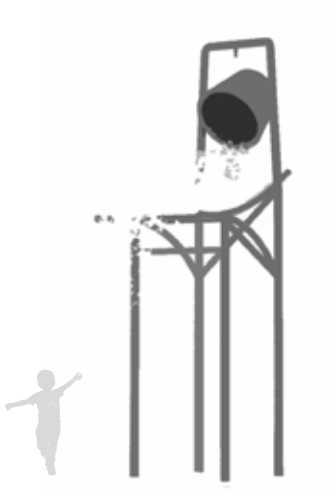

How is it installed ?

It is necessary to soak it into the concrete anchor and connect it to a water intake.

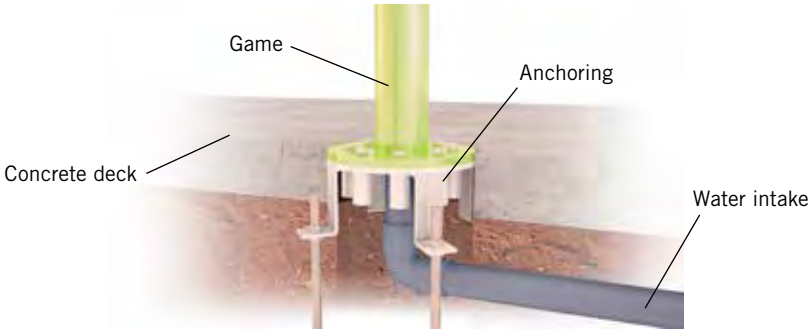

TECHNICAL FEATURES

Code	**IS-30A47**
Measurements	195 X 140 X 455 cm
Age range	4 - 15 years
Users	8 users
Water outlets	1 unit
Pool depth	From 0 to 35 cm
Pressure	10^5 Pa
Water flow	200 lpm



GRILLES FOR OVERFLOW

GENERAL NOTE FOR ALL MODELS

Made of PP stabilized against UV rays. The whole range comes in white. Ask your dealer about other colours.

Made up of tiles in modules for straight and curved sections (outer radius of 1 or 2 m), they click into place (male-female fitting), which gives certain leeway in assembling them, as well as absorbing their potential expansion due to the temperature changes to which they are exposed.

For all models of grating, a channel 5 mm wider than the grating must be built so that it easily fits into place and any potential expansion is prevented.

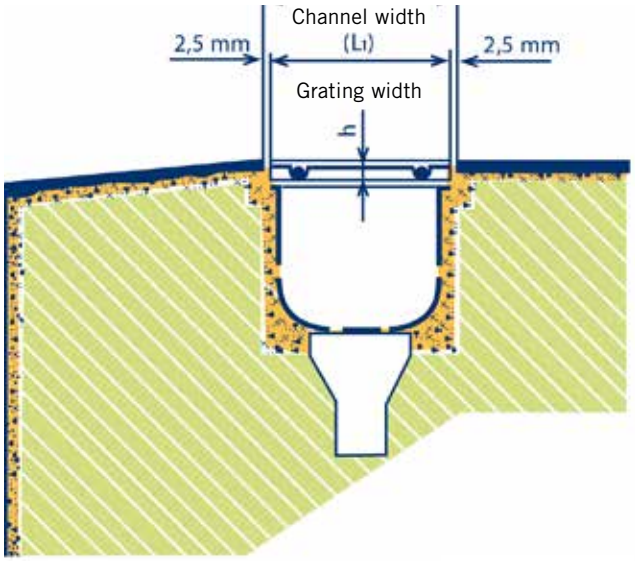

Channel width	Grating width
200	195
250	245
300	295
350	345

The height (h) of the grating varies depending on the model.

– Longitudinal model h = 24 mm

– Transversal model h = 22 mm and h = 35 mm

LONGITUDINAL MODEL

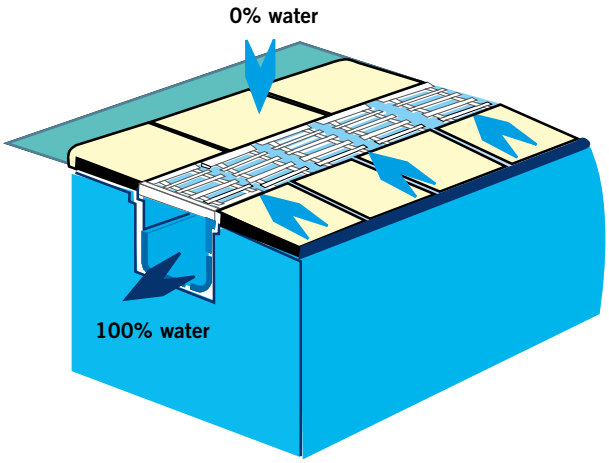

The longitudinal design of this model ensures that any excess water from the pool is not allowed to overflow onto the pool deck, thus maintaining it practically dry.

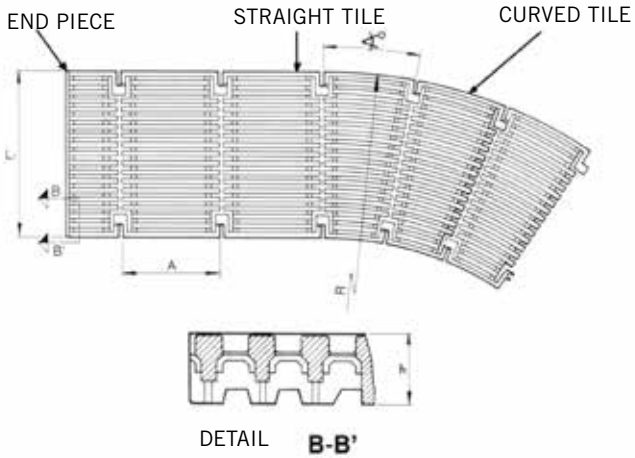

	Model	L	L1	h	A	∢°r.1m.	∢°r.2m.
STRAIGHT TILE	05581	200	195	24	206	-	-
	05582	250	245	24	206	-	-
	05583	300	295	24	206	-	-
	05584	350	345	24	206	-	-
END PIECE	06420	200	195	24	-	-	-
	06421	250	245	24	-	-	-
	06422	300	295	24	-	-	-
	06423	350	345	24	-	-	-
CURVED TILE	08001	200	195	24	-	x	
	08002	300	295	24	-	x	
	07565	250	245	24	-	x	
	07566	350	345	24	-	x	
	05585	200	195	24	-		x
	05586	250	245	24	-		x

+ info PDB Product Database
Further information on **PRODUCTS**
www.astralpool.com

GRILLES FOR OVERFLOW

Longitudinal grating tile



Made of PP stabilized against UV rays. Grating fastened together using male-female hooks (5 units = 1,024 meters). The flexible properties of the grating means a radius of up to 5 m can be covered.

	Code	Standard Pack	Standard Weight in kg	Standard Volume in m^3
Height 24 mm, width 195 mm	**05581**	45	16.2	0.080
Height 24 mm, width 245 mm	**05582**	29	13.4	0.080
Height 24 mm, width 291 mm	**05583**	28	15.6	0.080
Height 24 mm, width 345 mm	**05584**	19	13.2	0.080

Curved grating tile



Made of PP stabilized against UV rays. Grating fastened together using male-female hooks.

Height	L	L1	Radius	Code	Standard Pack	Standard Weight in kg	Standard Volume in m^3
24 mm	200 mm	195 mm	1 m	**08001**	60	17.2	0.079
24 mm	300 mm	295 mm	1 m	**08002**	32	14.6	0.079
24 mm	250 mm	245 mm	1 m	**07565**	42	17.2	0.079
24 mm	350 mm	345 mm	1 m	**07566**	24	13.4	0.079
24 mm	200 mm	195 mm	2 m	**05585**	48	17.2	0.079
24 mm	250 mm	245 mm	2 m	**05586**	30	14.2	0.079

End piece kit for parallel grating



Made of AISI-304L stainless steel plate, with end piece and longitudinal grating made of PP stabilized against UV rays. Made so that the grating in the end piece can be cut to fit in place.

	Code	Standard Pack	Standard Weight in kg	Standard Volume in m^3
Height 24 mm, width 195 mm	**16064**	15	5.11	0.002
Height 24 mm, width 245 mm	**16065**	12	5.17	0.002
Height 24 mm, width 291 mm	**16066**	8	4.21	0.002
Height 24 mm, width 345 mm	**16067**	8	5.00	0.002

Perimeter grating



Range of overflow grating for swimming pools. Made of homopolymer polypropylene, with additives for UV protection. Available in 500 mm long modules with male-female hooks for easy and fast assembly.

	Code	Standard Pack	Standard Weight in kg	Standard Volume in m^3
0.5 m longitudinal grating Height 22 mm Width 195 mm	**28664**	20	19.9	0.080

Other grating colours can be made to order.
For further information, ask your AstralPool dealer.

GRILLES FOR OVERFLOW

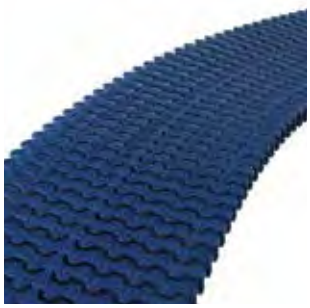

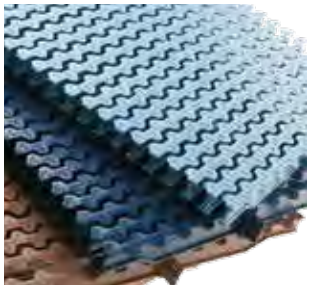

Other grating colours can be made to order.
For further information, ask your AstralPool dealer.

Modular transversal grating for curves

Made of PP stabilized against UV rays. Assembled by fitting the modules together. Available in 5 colours. Other grating colours can be made to order. For further information, please contact your AstralPool dealer.

	Code	Standard Pack	Standard Weight in kg	Standard Volume in m^3
Modular grating for curves				
Height 22 mm, width 195 mm	**34190**	470	14.1	0.08
Height 22 mm, width 245 mm	**34191**	320	12.4	0.08
Height 22 mm, width 295 mm	**34192**	300	15.0	0.08
Height 22 mm, width 335 mm	**34193**	250	15.0	0.08
Reversible modular grating for curves				
Height 35 mm, width 195 mm	**34194**	450	16.0	0.08
Height 35 mm, width 245 mm	**34195**	300	13.7	0.08
Height 35 mm, width 295 mm	**34196**	290	17.3	0.08
Height 35 mm, width 335 mm	**34197**	250	17.4	0.08

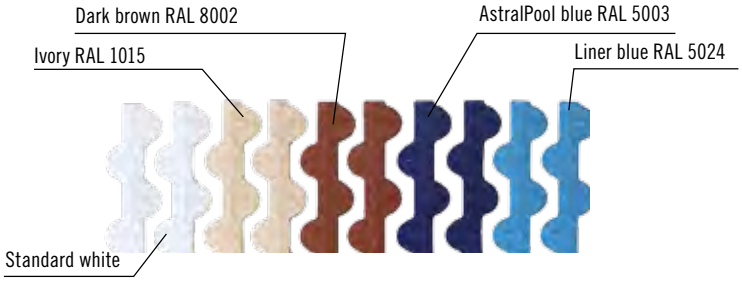

Colour	Code
White	-
RAL 1015	**CL90**
RAL 8002	**CL109**
RAL 5003	**CL60**
RAL 5024	**CL 108**

Note: Colours in the pictures are not exactly the same as in real product.



Other grating colours can be made to order.
For further information, ask your AstralPool dealer.

Transversal grating for curves

Modular transversal grating for curves. Made of PP stabilized against UV rays. Assembled by fitting the modules together. Class 3 slip resistance (Rd>45) pursuant to UNE-ENV 12633: 2003.

	Code	Standard Pack	Standard Weight in kg	Standard Volume in m^3
Modular grating for curves				
Height 22 mm, width 195 mm	**52535**	470	14.1	0.08
Height 22 mm, width 245 mm	**52536**	320	12.4	0.08
Height 22 mm, width 295 mm	**52537**	300	15.0	0.08
Height 22 mm, width 335 mm	**52538**	250	15.0	0.08
Reversible modular grating for curves				
Height 35 mm, width 195 mm	**52539**	450	16.0	0.08
Height 35 mm, width 245 mm	**52540**	300	13.7	0.08
Height 35 mm, width 295 mm	**52541**	290	17.3	0.08
Height 35 mm, width 335 mm	**52542**	250	17.4	0.08

Other grating colours can be made to order.
For further information, ask your AstralPool dealer.

GRILLES FOR OVERFLOW



Modular transversal grating for curves

Made of PP stabilized against UV rays. Assembled by fitting the modules together.

	Code	Standard Pack	Standard Weight in kg	Standard Volume in m^3
Modular grating for curves				
Height 22 mm, width 195 mm	**11107**	470	15.8	0.080
Height 22 mm, width 245 mm	**11108**	320	13.6	0.080
Height 22 mm, width 295 mm	**19202**	300	18.0	0.080
Height 22 mm, width 335 mm	**19203**	250	17.0	0.080
Reversible modular grating for curves				
Height 35 mm, width 195 mm	**00220**	450	16.5	0.080
Height 35 mm, width 245 mm	**00221**	300	14.3	0.080
Height 35 mm, width 295 mm	**00222**	290	19.3	0.080
Height 35 mm, width 335 mm	**00223**	250	18.1	0.080



Modular grating for curves

Made of PP stabilized against UV rays. Assembled by fitting the modules together. Non-slip surface. Other colours available on request. For further information, please contact your AstralPool dealer. Compliant with standard EN-13451-1 (8 mm). Class 3 slip resistance (Rd>45) pursuant to UNE-ENV 12633: 2003.

	Code	Standard Pack	Standard Weight in kg	Standard Volume in m^3
Modular grating for curves				
Height 22 mm, width 195 mm	**28656**	470	20.84	0.082
Height 22 mm, width 245 mm	**28657**	320	18.80	0.082
Height 22 mm, width 295 mm	**28658***	300	18.80	0.082
Height 22 mm, width 335 mm	**28659***	250	20.84	0.082
Reversible modular grating for curves				
Height 35 mm, width 195 mm	**28660**	450	26.90	0.082
Height 35 mm, width 245 mm	**28661**	300	24.70	0.082
Height 35 mm, width 295 mm	**28662***	290	26.61	0.082
Height 35 mm, width 335 mm	**28663***	250	22.25	0.082

* In testing process.



Transversal grating

Made of PP stabilized against UV rays. Fastened together by a pass-through cable (49 units per metre).

	Code	Standard Pack	Standard Weight in kg	Standard Volume in m^3
Height 22 mm, width 195 mm	**00212**	340	11.9	0.039
Height 22 mm, width 245 mm	**00213**	305	13.2	0.039

+ info PDB Product Database
Further information on **PRODUCTS**
www.astralpool.com

GRILLES FOR OVERFLOW



Stainless steel plastic coated cable

Ø 2.5 mm for fastening modules together.

	Code	Standard Pack	Standard Weight in kg	Standard Volume in m^3
Stainless steel plastic coated cable	**00214**	1000 m	21.0	0.036



AISI-316L stainless steel plastic coated cable

Ø 2.5 mm for fastening modules together.

	Code	Standard Pack	Standard Weight in kg	Standard Volume in m^3
AISI-316L stainless steel plastic coated cable	**00215**	1000 m	21.0	0.036



Cable locking pins

Made of brass.

	Code	Standard Pack	Standard Weight in kg	Standard Volume in m^3
Cable locking pins	**00216**	100	1.5	0.001

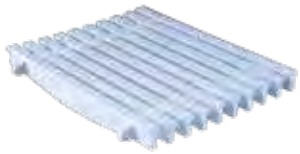

Other grating colours can be made to order.
For further information, ask your AstralPool dealer.

Transversal grating tile

Made of PP stabilized against UV rays. Tiles fitted together using a snap fastening system (5 units = 0.975 m).

	Code	Standard Pack	Standard Weight in kg	Standard Volume in m^3
Height 22 mm, width 245 mm	**00217**	52	22.8	0.080
Height 22 mm, width 295 mm	**00218**	45	23.1	0.080
Height 22 mm, width 335 mm	**00219**	38	22.0	0.080



Grating support profile

Suitable for grating heights of 22, 24 and 35 mm. Made of weather resistant plastic. Supplied in 2 m strips. Inside measurements: 24 mm x 37 mm.

Available in other colours. For further information, ask your dealer.

	Code	Standard Pack	Standard Weight in kg	Standard Volume in m^3
Grating support profile	**00224**	25	13.2	0.033



Other grating colours can be made to order.
For further information, ask your AstralPool dealer.

90° corner tiles for overflow channels

Made of white, injection moulded copolymer polypropylene.

	Code	Standard Pack	Standard Weight in kg	Standard Volume in m^3
Height 22 mm, channel width 195 mm	**22379**	4	2.8	0.006
Height 22 mm, channel width 245 mm	**22380**	4	3.6	0.009
Height 22 mm, channel width 295 mm	**22381**	4	4.8	0.012
Height 22 mm, channel width 335 mm	**22382**	4	5.7	0.016
Height 35 mm, channel width 195 mm	**22383**	4	3.2	0.009
Height 35 mm, channel width 245 mm	**22384**	4	4.1	0.014
Height 35 mm, channel width 295 mm	**22385**	4	5.3	0.012
Height 35 mm, channel width 335 mm	**22386**	4	6.2	0.023

+ info PDB Product Database
Further information on **PRODUCTS**
www.astralpool.com

GRILLES FOR OVERFLOW



Complies with Standard **EN 13451-1-3**

Complies with Standards **EN 16582-1** **EN 16713-2**

Stainless steel longitudinal grating

Longitudinal grating made of stainless steel. A channel 5 mm wider than the grating must be dug so that it is easy to fit.

It is made up of straight sections of AISI-316L stainless steel, 500 mm in length. Straight sections can be made to measure in order to fit the length of any pool.

There are 4 different models depending on the grating used. Height 35 mm

	Code	Standard Pack	Standard Weight in kg	Standard Volume in m^3
Stainless steel 195 mm longitudinal grating	**32415**	-	-	-
Stainless steel 245 mm longitudinal grating	**32416**	-	-	-
Stainless steel 295 mm longitudinal grating	**32417**	-	-	-
Stainless steel 345 mm longitudinal grating	**32418**	-	-	-



70956

Stainless steel reinforced grating

AISI-316L stainless steel grating, compliant with standard EN: 1345-1:2000. Resistant to salt water. Intended for use in both residential and public pools.

	Code	Standard Pack	Standard Weight in kg	Standard Volume in m^3
Reinforced 252 x 252 mm grating	**70956**	1	-	-
Reinforced 410 x 410 mm grating	**70957**	1	-	-



70957

Complies with Standard **EN 1345-1:2000**



COMMERCIAL POOLS
POOL SHELL EQUIPMENT

Concrete pool

499 • Main drains
501 • Main drain accessories
502 • Drain grilles
503 • ABS inlets
504 • S.S. inlets

Liner and prefabricated pool

505 • Main drains
507 • Main drain accessories
508 • ABS inlets
510 • S.S. inlets

POOL MAIN DRAINS INFORMATION

How affects UNE-EN 13451-3:2012+A3:2016 main drains in commercial pools

	NEW POOL		POOL RENOVATION	
	Suction rate: insure a maximum of 0.5 m/s paragraph 4.6.1			
	ANTI-VORTEX COVER	**NON ANTI-VORTEX COVER**	**WITH MAIN DRAIN BODY CHANGE**	**UNCHANGED MAIN DRAIN BODY**
RISK OF ENTRAPMENT **How to prevent it?**	Number of main drains per pool: **1** According to paragraph 4.6.1b (1,2 and 3)	Number of main drains per pool: **2** balanced main drains, **distanced at minimum 2 meters.** And if any of the **2 main drain** is blocked the remaining one **should be able to absorb 100%** of the installation flow. According to paragraph 4.6.1a (1,2 and 3)	Applies **new pool rules**	Install an **anti-vortex grille** on pre-installed main drain According to paragraph 4.6.1b (1,2 and 3) or one or more additional main drain shall be installed as paragraph 4.6.1a (1,2 and 3)
	Another possibility is to install a compensating tank.			
CAVITY DIMENSION	Main drain should respect a certain cavity dimensions according to a mathematical rule.			
	In addition to the main drain requirements a vacuum system may be provided.			
OTHERS	Other requisites are considered to define that a main drain in compliant with EN, like design. e.g. the design of the grill to avoid human body parts or hair entrapment.			

Only with the fulfillment of all requisites of the standard, a Compliance Certification can be delivered!

*Anti-vortex plate is a special component installed in the suction line to control the turbulence in a flowing fluid. These plates allows to control the velocity of the fluid thus preventing cavitation in the fluid according to UNE-EN 13451-3.

CONCRETE POOL - DRAINS

All main drains in the range are supplied with UV protection.
To prevent the risk of suction, install the main drains according to local regulations.

Recommended use:

- Maximum suction rate of 0.5 m/s.
- Install at least 2 main drains, each with a suction capacity able to handle the pool's full flow rate.



56378



56378CL090



56378CL129



56378CL144

NORM main drain

Range of main drains suitable for public and private swimming pools. Supplied with flat or antivortex grilles. Manufactured in white ABS with UV treatment, fitted with a 2" side outlet and a 1 ½" bottom outlet connection, bottom outlet covered by semi-die cut tab.

	Code	Standard Pack	Standard Weight in kg	Standard Volume in m³
Flat grating - White	**56378**	4	10.60	0.069
Flat grating - Beige	**56378CL090**	4	10.60	0.069
Flat grating - Light grey	**56378CL129**	4	10.60	0.069
Flat grating - Anthracite grey	**56378CL144**	4	10.60	0.069
Antivortex grating - White	**56379**	4	10.60	0.069
Antivortex grating - Beige	**56379CL090**	4	10.60	0.069
Antivortex grating - Light grey	**56379CL129**	4	10.60	0.069
Antivortex grating - Anthracite grey	**56379CL144**	4	10.60	0.069



56379

Complies with Standards
EN 16582-1
EN 16713-2

Complies with Standard
EN 13451-1-3

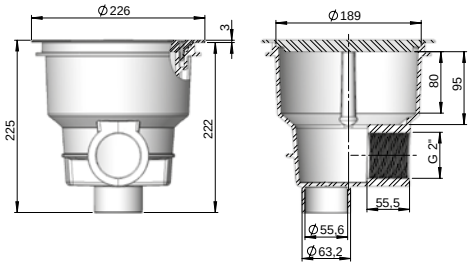

Main drain with square cover in stainless steel. 2" outlet



2" side outlet. Manufactured in stainless steel. AISI-316. Antivortex lid. Can be used in concrete and prefabricated pools with a 00276 adapter (see page 116). Maximum flow rate: 6 m³/h.

Code	Standard Pack	Standard Weight in kg	Standard Volume in m³
00269	1	1.14	0.01

NORM main drain in polyester and fibreglass - 330 mm x 330 mm



Range of main drains manufactured in polyester resin and fibreglass. Grille in stainless steel or plastic. Optional hydrostatic valve.

Grille in stainless steel Outlet connect. to be glued	Grille	Flow rate	Code	Standard Pack	Standard Weight in kg	Standard Volume in m³
Ø 75 mm	AISI-316L	15 m³/h	**20282N**	1	8	0.08
Ø 90 mm	AISI-316L	23 m³/h	**20283N**	1	9	0.08
Ø 110 mm	AISI-316L	27 m³/h	**20284N**	1	10	0.08

Complies with Standard
EN 13451-1/3 2012

Minimum depth of installation: 1.5 m. Maximum recommended flow rate down drain: 103 m³/h (0.5 m/s).

+ info PDB Product Database
Further information on **PRODUCTS**
www.astralpool.com

CONCRETE POOL - DRAINS



Optional standard American size and antivortex in standard American size

Model in polyester and fibreglass - 330 mm x 330 mm

With a gelcoat finish. With optional hydrostatic valve.

Outlet connection to be glued	Grille	Flow rate	Code	Standard Pack	Standard Weight in kg	Standard Volume in m³
Grille in stainless steel. AISI-316L. Holes < 8 mm.						
Ø 75 mm	AISI-316L	16 m³/h	**20282**	1	5	0.047
Ø 90 mm	AISI-316L	22 m³/h	**20283**	1	5	0.047
Ø 110 mm	AISI-316L	33 m³/h	**20284**	1	5	0.047
Grille in ABS plastic with protection against UV rays.						
Ø 75 mm	Plastic	16 m³/h	**22359**	1	4.5	0.034
Ø 90 mm	Plastic	22 m³/h	**22360**	1	4.5	0.034
Ø 110 mm	Plastic	33 m³/h	**22361**	1	4.5	0.034
Ø 125 mm	Plastic	43 m³/h	**22362**	1	4.5	0.034

Maximum recommended flow rate in accordance with standard EN 13451-1.



Complies with Standard
EN 13451-1/3 2012

Optional:
Standard American sizes

NORM main drain in polyester and fibreglass - 507 mm x 507 mm

Range of drains manufactured in polyester resin and fibreglass. Grille in AISI-316L stainless steel or plastic. Optional hydrostatic valve.

Outlet connection to be glued	Grille	Flow rate	Code	Standard Pack	Standard Weight in kg	Standard Volume in m³
Grille in stainless steel						
Ø 110 mm	AISI-316L	42 m³/h	**20285N**	1	16	0.23
Ø 125 mm	AISI-316L	51 m³/h	**20286N**	1	17	0.23
Ø 140 mm	AISI-316L	66 m³/h	**20287N**		18	0.23
Ø 160 mm	AISI-316L	95 m³/h	**20288N**	1	19	0.23
Ø 200 mm	AISI-316L	103 m³/h	**20289N**	1	20	0.23

Minimum depth of installation: 1.5 m. Maximum recommended flow rate down drain: 103 m³/h (0.5 m/s).

CONCRETE POOL - DRAINS



Model in polyester and fibreglass - 507 mm x 507 mm

With a gelcoat finish. With optional hydrostatic valve.

Outlet connection to be glued	Grille	Flow rate	Code	Standard Pack	Standard Weight in kg	Standard Volume in m³
Grille in AISI-316L stainless steel. Holes < 8 mm.						
Ø 110 mm	AISI-316L	33 m³/h	**20285**	1	11.5	0.132
Ø 125 mm	AISI-316L	43 m³/h	**20286**	1	11.5	0.132
Ø 140 mm	AISI-316L	54 m³/h	**20287**	1	11.5	0.132
Ø 160 mm	AISI-316L	70 m³/h	**20288**	1	11.5	0.132
Ø 200 mm	AISI-316L	100 m³/h	**20289**	1	11.5	0.132
Grille in ABS plastic with protection against UV rays.						
Ø 110 mm	Plastic	33 m³/h	**28709**	1	11.5	0.132
Ø 125 mm	Plastic	43 m³/h	**28710**	1	11.5	0.132
Ø 140 mm	Plastic	54 m³/h	**28711**	1	11.5	0.132
Ø 160 mm	Plastic	70 m³/h	**28712**	1	11.5	0.132
Ø 200 mm	Plastic	100 m³/h	**28713**	1	11.5	0.132

Maximum recommended flow rate in accordance with standard EN 13451-1.

CONCRETE POOL - DRAIN ACCESSORIES



Hydrostatic valve

To alleviate the pressure that can build up under the pool shell due to groundwater, it is recommended that a hydrostatic valve and a drainage pipe be fitted to the main drain. Hydrostatic valve to be fitted to the 2" bottom outlet on main drains. Made of white ABS, with stainless steel screw and spring. 1½" male thread.

Code	Standard Pack	Standard Weight in kg	Standard Volume in m³
00277	50	2.63	0.01



Drainage pipe

Drainage pipe with 1½" BSP thread connection for main drains with code numbers 01466, 27837 and 27839. Made of ABS.

Code	Standard Pack	Standard Weight in kg	Standard Volume in m³
21581	24	3.54	0.021

+ info PDB Product Database
Further information on **PRODUCTS**
www.astralpool.com

CONCRETE POOL - DRAIN GRILLES



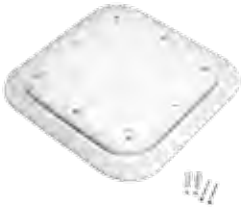



Complies with Standard
EN 13451-1-3

Flush-fit antivortex cover

Special flush-fit design that enables pool cleaners to go over it without blocking it up. Smooth slopes.

The 415 mm x 415 mm cover (25344) can be fitted to the following main drains:

With stainless steel grille:	**With plastic grille:**
-20282	-22359
-20283	-22360
-20284	-22361
	-22362

The 570 mm x 570 mm cover (28556) can be fitted to the following main drains:

With stainless steel grille:	**With plastic grille:**
-20285	-28709
-20286	-28710
-20287	-28711
-20288	-28712

	Code	Standard Pack	Standard Weight in kg	Standard Volume in m^3
415 mm x 415 mm, Height: 70 mm	**25344**	1	2.25	0.012
570 mm x 570 mm, Height: 60 mm	**28556**	1	4.00	0.032



Complies with Standard
EN 13451-1-3

Complies with Standards
EN 16582-1
EN 16713-2

Drain grille in stainless steel

Designed for concrete pools. Support frame and grille in polished stainless steel. Supplied with fixing screws. Other sizes can be made to order.

		Code	Standard Pack	Standard Weight in kg	Standard Volume in m^3
AISI-304					
Size (mm)	**Max. recommended flow rate**				
200 x 200	15 m^3/h (0.5 m/s)	**00284**	1	1.2	0.01
300 x 300	43 m^3/h (0.5 m/s)	**00285**	1	2.2	0.01
400 x 400	83 m^3/h (0.5 m/s)	**00286**	1	4.0	0.03
500 x 500	136 m^3/h (0.5 m/s)	**00287**	1	4.5	0.04
AISI-316					
Size (mm)	**Max. recommended flow rate**				
200 x 200	15 m^3/h (0.5 m/s)	**30764**	1	1.2	0.01
300 x 300	43 m^3/h (0.5 m/s)	**30765**	1	2.2	0.01
400 x 400	83 m^3/h (0.5 m/s)	**30766**	1	4.0	0.03
500 x 500	136 m^3/h (0.5 m/s)	**30767**	1	4.5	0.04

CONCRETE POOL - ABS INLETS



Complies with Standards
EN 16582-1
EN 16713-2

Return inlet/suction nozzle for high flow rates

Return inlet for large flow rates that can also be used as a suction nozzle. Maximum suction flow rate of 30m³/h for a maximum flow rate speed of 4 m/s. Maximum suction flow rate of 5 m³/h for a maximum flow rate speed of 0.5 m/s. PVC body. Connection for Ø 75 or Ø 90mm pipe. Inlets can be installed into bushing 43590 (see page 123). Grille can be adjusted in any direction.

	Code	Standard Pack	Standard Weight in kg	Standard Volume in m³
Return inlet/suction nozzle for large flows and concrete pools	**41520**	16	4.20	0.021



Complies with Standards
EN 16582-1
EN 16713-2

NORM return inlets

Range of inlets suitable for installation in public and private pools. Manufactured in white ABS with UV treatment.

	Code	Standard Pack	Standard Weight in kg	Standard Volume in m³
NORM return inlet for concrete pools	**56498**	24	4.5	0.020

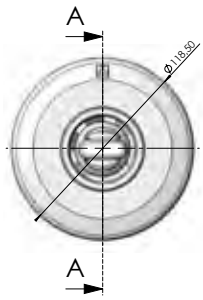

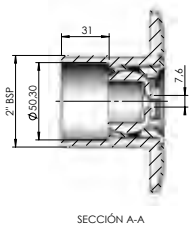

SECCIÓN A-A



Complies with Standards
EN 16582-1
EN 16713-2

Pool floor return inlet

All-in-one return inlet and suction nozzle. Adjustable flow rate. Made of ABS plastic and screws in stainless steel. Maximum recommended flow rate compliant with standard EN 13451-1: 12 m³/h.

	Code	Standard Pack	Standard Weight in kg	Standard Volume in m³
Outer 2" thread, int. Ø 50 mm - White	**00303**	24	5.0	0.020
Outer 2" thread, int. Ø 50 mm - Beige	**00303CL090**	24	5.0	0.020
Outer 2" thread, int. int. Ø 50 mm - Light grey	**00303CL129**	24	5.0	0.020
Outer 2" thread, int. Ø 50 mm - Anthracite grey	**00303CL144**	24	5.0	0.020
To glue onto Ø 63 mm PN 6, inner Ø 50 mm	**20140**	20	4.4	0.021



3" adjustable pool floor return inlet

Made of white ABS plastic. Suction. Flow rate adjusted by turning the grille. Suction surface area: 0.015 m². Outer Ø 295 mm wall. Flow rate (0.4 m/s) 20 m³/h. Max. recommended flow rate compliant with standard EN 13451-1: 26 m³/h (0.5 m/s.).

	Code	Standard Pack	Standard Weight in kg	Standard Volume in m³
Grille in AISI-304 stainless steel	**08317**	2	2.65	0.047
Grille in white ABS	**11796**	2	2.65	0.047

+ info
PDB Product Database
Further information on **PRODUCTS**
www.astralpool.com

CONCRETE POOL - ABS INLETS


22353


22353CL090


22353CL129


22353CL144

Complies with Standards
EN 16582-1
EN 16713-2

Pool floor return inlet with swivel joint

Swivel body in PVC. Cover in ABS. Adjuster screw in POM. Maximum flow rate of 10 m³/h. Fits to Ø 75 mm piping and wall conduit with code number 21248.

	Code	Standard Pack	Standard Weight in kg	Standard Volume in m³
Pool floor inlet - White	**22353**	24	4.1	0.022
Pool floor inlet - Beige	**22353CL090**	24	4.1	0.022
Pool floor inlet - Light grey	**22353CL129**	24	4.1	0.022
Pool floor inlet - Anthracite grey	**22353CL144**	24	4.1	0.022



Suction inlet

To be glued to a Ø 63 mm pipe. Body and grille in ABS plastic, screws in stainless steel. Application on wall. Its characteristics make this nozzle particularly suitable for overflow channels. Maximum flow rate: 4.5 m³/h.

Code	Standard Pack	Standard Weight in kg	Standard Volume in m³
00302	12	3.1	0.016

CONCRETE POOL - STAINLESS STEEL INLETS



Complies with Standard
EN 13451-1-3

Complies with Standards
EN 16582-1
EN 16713-2

Adjustable pool floor return inlet

2" external thread. Made of AISI-316L stainless steel. Can be fitted in concrete and prefabricated pools. The water flow can be adjusted by loosening or tightening the central screw. Max. recommended flow rate complaint with standard EN 13451-3: 14 m³/h.

Code	Standard Pack	Standard Weight in kg	Standard Volume in m³
15839	1	0.9	0.002



Complies with Standard
EN 13451-1-3

Complies with Standards
EN 16582-1
EN 16713-2

Adjustable return inlet

Manufactured in chrome-plated brass. Grille in AISI-316L stainless steel.

	Code	Standard Pack	Standard Weight in kg	Standard Volume in m³
Max. flow rate: 21 m³/h 2" inner thread	**00312**	12	7.0	0.013
Max. flow rate: 40 m³/h 3" inner thread	**00313**	6	10.0	0.014

LINER AND PREFABRICATED POOL - DRAINS

All main drains in the range are supplied with UV protection.
To prevent the risk of suction, install the main drains according to local regulations.

Recommended use:

- Maximum suction rate of 0.5 m/s.
- Install at least 2 main drains, each with a suction capacity able to handle the pool's full flow rate.



56380



56382CL090



56382



56382CL144



56382CL129

Complies with Standards
EN 16582-1
EN 16713-2

NORM main drain

Range of main drains suitable for installation in public and private pools. Supplied with flat or antivortex grilles. Manufactured in white ABS with UV treatment, fitted with a 2" side outlet and a 1 ½" bottom outlet connection, bottom outlet covered by semi-die cut tab.

	Code	Standard Pack	Standard Weight in kg	Standard Volume in m³
Flat grating with inserts - White	**56380**	4	10.60	0.069
Flat grating with inserts - Beige	**56380CL090**	4	10.60	0.069
Flat grating with inserts - Light grey	**56380CL129**	4	10.60	0.069
Flat grating with inserts - Anthracite grey	**56380CL144**	4	10.60	0.069
Flat grating without inserts - White	**56381**	4	10.60	0.069
Flat grating without inserts - Beige	**56381CL090**	4	10.60	0.069
Flat grating without inserts - Light grey	**56381CL129**	4	10.60	0.069
Flat grating without inserts - Anthracite grey	**56381CL144**	4	10.60	0.069
Antivortex grating with inserts - White	**56382**	4	10.60	0.069
Antivortex grating with inserts - Beige	**56382CL090**	4	10.60	0.069
Antivortex grating with inserts - Light grey	**56382CL129**	4	10.60	0.069
Antivortex grating with inserts - Anthracite grey	**56382CL144**	4	10.60	0.069
Antivortex grating without inserts - White	**56383**	4	10.60	0.069
Antivortex grating without inserts - Beige	**56383CL090**	4	10.60	0.069
Antivortex grating without inserts - Light grey	**56383CL129**	4	10.60	0.069
Antivortex grating without inserts - Anthracite grey	**56383CL144**	4	10.60	0.069



Complies with Standard
13451-1-3

NORM main drain in polyester and fibreglass - 350 mm x 350 mm

Range of main drains manufactured in polyester resin and fibreglass. Grille in stainless steel or plastic. Optional hydrostatic valve.

			Code	Standard Pack	Standard Weight in kg	Standard Volume in m³
Grille in stainless steel						
Outlet connection to be glued	**Grille**	**Flow rate**				
Ø 75 mm	AISI-316L	15 m³/h	**20074N**	1	8	0.08
Ø 90 mm	AISI-316L	23 m³/h	**20075N**	1	9	0.08
Ø 110 mm	AISI-316L	27 m³/h	**20290N**	1	10	0.08

Minimum depth of installation: 1.5 m.
Maximum recommended flow rate down drain: 103 m³/h (0.5 m/s).

Optional standard American size and antivortex in standard American size

+ info PDB Product Database
Further information on **PRODUCTS**
www.astralpool.com

LINER AND PREFABRICATED POOL - DRAINS



Complies with Standard
13451-1-3

Optional standard American size and antivortex in standard American size

NORM main drain in polyester and fibreglass - 507 mm x 507 mm

Range of main drains manufactured in polyester resin and fibreglass. Grille in stainless steel or plastic. Optional hydrostatic valve.

Grille in stainless steel

Outlet connection to be glued	Grille	Flow rate	Code	Standard Pack	Standard Weight in kg	Standard Volume in m³
Ø 110 mm	AISI-316L	42 m³/h	**20076N**	1	16	0.23
Ø 125 mm	AISI-316L	51 m³/h	**20077N**	1	17	0.23
Ø 140 mm	AISI-316L	66 m³/h	**20078N**	1	18	0.23
Ø 160 mm	AISI-316L	95 m³/h	**20079N**	1	19	0.23
Ø 200 mm	AISI-316L	103 m³/h	**20291N**	1	20	0.23

Minimum depth of installation: 1.5 m.
Maximum recommended flow rate down drain: 103 m³/h (0.5 m/s).





Optional:
Standard American sizes

Main drain in polyester and fibreglass - 350 mm x 350 mm

Made of fibreglass-reinforced polyester. With a gelcoat finish. Comes with gaskets, flange and screws. Holes < 8 mm. Outlet connection to be glued. With optional hydrostatic valve.

Grille in AISI-316L stainless steel

Outlet connection to be glued	Grille	Flow rate	Code	Standard Pack	Standard Weight in kg	Standard Volume in m³
Ø 75 mm	AISI-316L	16 m³/h	**20074**	1	6.5	0.047
Ø 90 mm	AISI-316L	22 m³/h	**20075**	1	6.5	0.047
Ø 110 mm	AISI-316L	33 m³/h	**20290**	1	6.5	0.047

Max. recommended flow rate: 33.5 m³/h (0.5 m/s)
Recommended flow rate: 20 m³/h (0.3 m/s)

Grille in ABS plastic with protection against UV rays.

Outlet connection to be glued	Grille	Flow rate	Code	Standard Pack	Standard Weight in kg	Standard Volume in m³
Ø 75 mm	Plastic	18 m³/h	**22416**	1	6.5	0.047
Ø 90 mm	Plastic	27 m³/h	**22417**	1	6.5	0.047
Ø 110 mm	Plastic	42 m³/h	**22418**	1	6.5	0.047
Ø 125 mm	Plastic	45 m³/h	**22419**	1	6.5	0.047

Max. recommended flow rate: 45 m³/h (0.5 m/s)
Recommended flow rate: 27 m³/h (0.3 m/s)

LINER AND PREFABRICATED POOL - DRAINS



Main drain in polyester and fibreglass - 507 mm x 507 mm

With a gelcoat finish. Grille in AISI-316L stainless steel. Comes with gaskets, flanges and screws. Holes < 8 mm. Outlet connection to be glued. Recommended flow rate: 62 m³/h (0.3 m/s). Max. recommended flow rate: 103 m³/h (0.5 m/s.). With optional hydrostatic valve.

Grille in AISI-316L stainless steel

Outlet connection to be glued	Grille	Flow rate	Code	Standard Pack	Standard Weight in kg	Standard Volume in m³
Ø 110 mm	AISI-316L	42 m³/h	**20076**	1	1.4	0.132
Ø 125 mm	AISI-316L	51 m³/h	**20077**	1	1.4	0.132
Ø 140 mm	AISI-316L	66 m³/h	**20078**	1	1.4	0.132
Ø 160 mm	AISI-316L	95 m³/h	**20079**	1	1.4	0.132
Ø 200 mm	AISI-316L	103 m³/h	**20291**	1	1.4	0.132

Grille in ABS plastic with protection against UV rays.

Outlet connection to be glued	Grille	Flow rate	Code	Standard Pack	Standard Weight in kg	Standard Volume in m³
Ø 110 mm	Plastic	42 m³/h	**28722**	1	1.4	0.132
Ø 125 mm	Plastic	51 m³/h	**28723**	1	1.4	0.132
Ø 140 mm	Plastic	66 m³/h	**28724**	1	1.4	0.132
Ø 160 mm	Plastic	95 m³/h	**28725**	1	1.4	0.132
Ø 200 mm	Plastic	103 m³/h	**28726**	1	1.4	0.132

LINER AND PREFABRICATED POOL - MAIN DRAIN ACCESSORIES



Hydrostatic valve

To alleviate the pressure that can build up under the pool shell due to groundwater, it is recommended that a hydrostatic valve and a drainage pipe be fitted to the main drain. Hydrostatic valve to be fitted to the 2" bottom outlet on main drains. Made of white ABS, with stainless steel screw and spring. 1½" male thread.

Code	Standard Pack	Standard Weight in kg	Standard Volume in m³
00277	50	2.63	0.01



Drainage pipe

Drainage pipe with 1½" BSP thread connection for main drains with code numbers 00270, 07880, 27838, 26197 and 27125. Made of ABS.

Code	Standard Pack	Standard Weight in kg	Standard Volume in m³
21581	24	3.54	0.021

+ info PDB Product Database
Further information on **PRODUCTS**
www.astralpool.com

LINER AND PREFABRICATED POOL - MAIN DRAIN ACCESSORIES







UNE-EN 13451-1-3
Complies with Standard
EN 13451-1:2000

Flush-fit antivortex cover

Special flush-fit design that enables pool cleaners to go over it without blocking it up.

The 415 mm x 415 mm cover (25344) can be fitted to the following main drains:

With stainless steel grille:	**With plastic grille:**
-20074	-22416
-20075	-22417
-20290	-22418
	-22419

The 570 mm x 570 mm cover (28556) can be fitted to the following main drains:

With stainless steel grille:	**With plastic grille:**
-20076	-28722
-20077	-28723
-20078	-28724
-20079	-28725

	Code	Standard Pack	Standard Weight in kg	Standard Volume in m³
415 mm x 415 mm. Height: 70 mm	**25344**	1	2.25	0.012
570 mm x 570 mm. Height: 60 mm	**28556**	1	3.90	0.015

LINER AND PREFABRICATED POOL - ABS INLETS



56499



56499CL090



56499CL129



56499CL144

NORM return inlets

Range of inlets suitable for installation in public and private pools. Manufactured in white ABS with UV treatment.

	Code	Standard Pack	Standard Weight in kg	Standard Volume in m³
For prefabricated/liner pools - White	**56499**	12	4.5	0.020
For prefabricated/liner pools - Beige	**56499CL090**	12	4.5	0.020
For prefabricated/liner pools - Light grey	**56499CL129**	12	4.5	0.020
For prefabricated/liner pools - Anthracite grey	**56499CL144**	12	4.5	0.020
For prefabricated pools - White	**56500**	24	4.5	0.020
For prefabricated pools - Beige	**56500CL090**	24	4.5	0.020
For prefabricated pools - Light grey	**56500CL129**	24	4.5	0.020
For prefabricated pools - Anthracite grey	**56500CL144**	24	4.5	0.020

LINER AND PREFABRICATED POOL - ABS INLETS



00340



00340CL090



00340CL129



00340CL144

Pool floor return inlet for prefabricated pools

Return nozzle. Comes with gaskets, flanges and screws. Adjustable flow rate. Max. flow rate: 12 m³/h.

	Code	Standard Pack	Standard Weight in kg	Standard Volume in m³
2" outer thread and internal Ø 50 mm - White	**00340**	12	5.4	0.020
2" outer thread and internal Ø 50 mm - Beige	**00340CL090**	12	5.4	0.020
2" outer thread and internal Ø 50 mm - Light grey	**00340CL129**	12	5.4	0.020
2" outer thread and internal Ø 50 mm - Anthracite grey	**00340CL144**	12	5.4	0.020
2" outer thread with NPT outlets	**11584**	12	5.4	0.020
To be glued Ø 63 mm PN 6 outer wall, Ø 50 mm inner	**20139**	12	5.4	0.021



Complies with Standards
EN 16582-1
EN 16713-2

BCN03 pool floor return inlet

Adjustable pool floor return inlet for liner pools. Designed to be glued to the inside of PN6 and PN10 piping. Made of white ABS, with self-tapping screws or with metal inserts. Plastic or stainless steel flange, depending on the model. Maximum flow rate: 9.5 m³/h.

	Code	Standard Pack	Standard Weight in kg	Standard Volume in m³
PN6 self-tapping plastic flange	**28230**	12	3.25	0.031
With PN6 plastic flange inserts	**28231**	12	3.55	0.031
PN10 self-tapping stainless steel flange	**28501**	12	4.24	0.031
With PN10 stainless steel inserts	**28502**	12	4.54	0.031



Complies with Standards
EN 16582-1
EN 16713-2

BCN03 adjustable pool floor return inlet

Pool floor return inlet for liner pools. Thanks to the adjustable feature, its installation in the pool floor is made extremely easy as it can be fitted after the concrete has been laid with wall conduit 43590.

	Code	Standard Pack	Standard Weight in kg	Standard Volume in m³
With plastic flange inserts	**43586**	12	2.04	0.033
Plastic self-tapping flange	**43587**	12	2.04	0.033
With stainless steel flange inserts	**43588**	12	2.04	0.033
Self-tapping stainless steel flange	**43589**	12	2.04	0.033



3" adjustable pool floor return inlet

Made of white ABS. Suction. Comes with gaskets, flanges and screws. Flow rate adjusted by turning the grille. Suction surface area: 0.015 m². Flow rate at 0.4 m/s: 20 m³/h. Max. recommended flow rate: 26 m³/h. (0.5 m/s.).

	Code	Standard Pack	Standard Weight in kg	Standard Volume in m³
Grille in AISI-304 stainless steel	**08316**	2	2.65	0.047
Grille in white ABS	**11795**	2	2.65	0.047

+ info
PDB Product Database
Further information on **PRODUCTS**
www.astralpool.com

LINER AND PREFABRICATED POOL - ABS INLETS



Double gasket kit

Kit made up of a double gasket and the screws necessary for the installation of nozzles in panel pools. Made of TPE, the kit enables the installation of various accessories in pool shells and protects the panelling from coming into contact with water. Easy to install. Prevents corrosion of the panelling in the area that has been die cut.

	Code	Standard Pack	Standard Weight in kg	Standard Volume in m^3
Inserts for nozzles	**43455-0500**	80	-	0.035



Complies with Standard
13451-1-3

Return inlet/suction nozzle for high flow rates

Return inlet for large flow rates that can also be used as a suction nozzle. Maximum suction flow rate of 30m^3/h for a maximum flow rate speed of 4 m/s. Maximum suction flow rate of 5 m^3/h for a maximum flow rate speed of 0.5 m/s. PVC body. Connection for Ø 75 or Ø 90 mm pipe. Inlets can be installed into bushing 43590.

	Code	Standard Pack	Standard Weight in kg	Standard Volume in m^3
Panel pools	**41518**	10	5.50	0.021
Prefabricated pools	**41521**	12	4.20	0.021



Suction nozzle for overflow pools with liner

PVC body. Maximum flow rate of 7 m^3/h for a maximum flow rate velocity of 0.5 m/s. Connection for Ø 75 or Ø 90 piping. Nozzle with double gasket. Thanks to the design of the flange, the nozzle is able to take in all of the water in the overflow channel.

Code	Standard Pack	Standard Weight in kg	Standard Volume in m^3
41519	12	4.83	0.021

LINER AND PREFABRICATED POOL - STAINLESS STEEL INLETS



Complies with Standard
EN 13451-1-3

Complies with Standards
EN 16582-1
EN 16713-2

Adjustable pool floor return inlet

2" external thread. Made of AISI-316L stainless steel. Can be fitted in concrete and prefabricated pools. The water flow can be adjusted by loosening or tightening the central screw. Max. recommended flow rate complaint with standard EN 13451-3: 14 m^3/h.

Code	Standard Pack	Standard Weight in kg	Standard Volume in m^3
15839	1	0.9	0.002



COMMERCIAL POOLS
BUILDING SOLUTIONS

512 • Modular prefabricated pools
514 • Modular prefabricated pools - One-off projects
515 • Inoxpool
518 • SkyPool Commercial Pools
521 • Bluespring

ASTRALPOOL

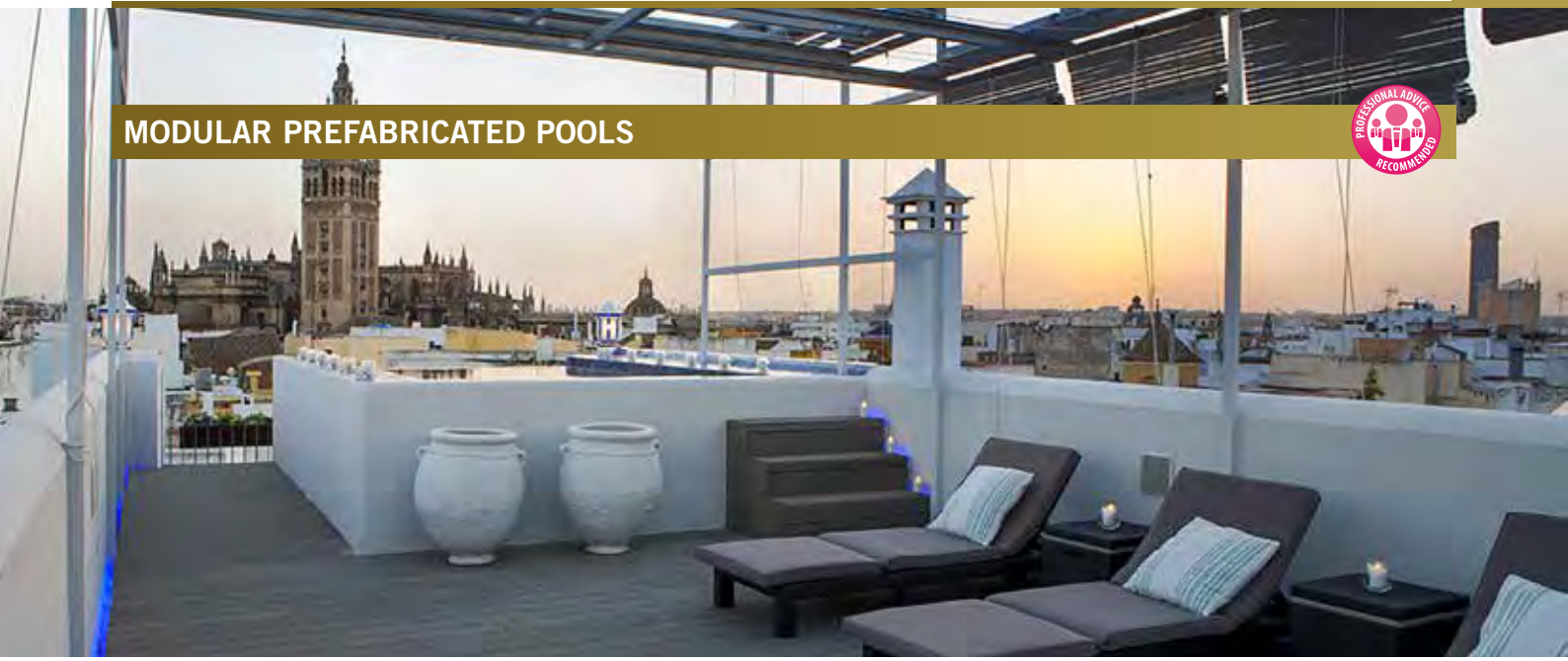

MODULAR PREFABRICATED POOLS

Freestanding modules for pools and spas, with a reinforced, waterproof composite, ready for the final coating.

Prefabricated modules with all accessories and wall conduits to ensure watertightness in the event of vibrations and water hammer.

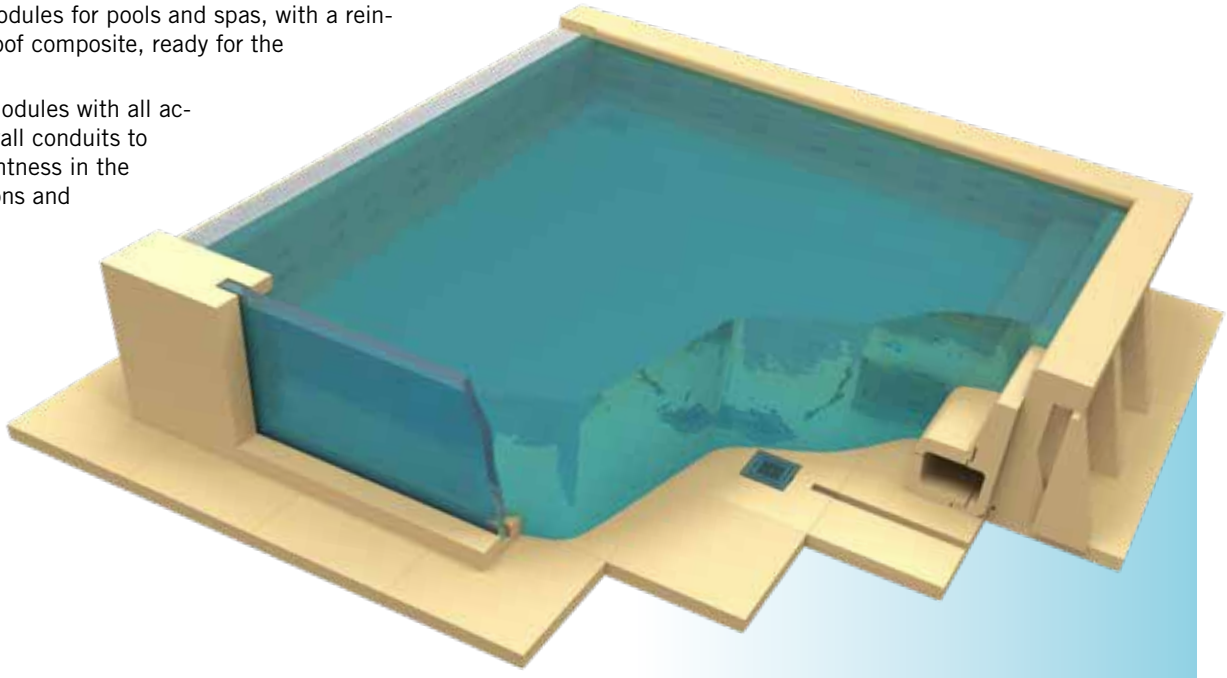

The thermal expansion coefficient of our prefabricated modules is far superior to that of concrete, as a result of which they do not crack over time because structural movement due to expansion and contraction are absorbed.

Ideal for refurbishments, roof tops, basements, etc. Their modular design makes them extremely easy to transport and work freely on the building site.

Exclusive designs without any restrictions, thanks to our computer-controlled systems that enable our clients to come up with their own designs without the need for casts, thus avoiding manual errors.

The prefabricated component parts make it possible to build and refurbish pools to the designers exact specifications, as well as enabling a pool to have exactly the same finish as a traditional one.

- Installation on complex sites
- Modular and freestanding
- Energy savings
- Resistant to water load
  Lightweight framework
- Prefabricated system

MODULAR PREFABRICATED POOLS



The top finish can be directly applied to the insulation material, which protects it from potential condensation between gaps that give rise to the proliferation of micro-organisms organisms that are a health hazard for humans.

Hardly any power loss (λ= 0,033 W/mK) in comparison with concrete (λ= 2,30 W/mK), which means it pays for itself in a very short space of time.



To ask for a quote, contact your area sales rep.

COMPARATIVE POWER CONSUMPTION TABLE

86% savings

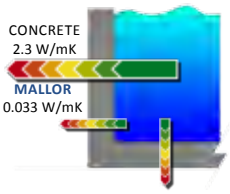

Energy conductivity figures as shown in the Spanish Technical Building Code (CTE).

LIGHTWEIGHT FRAMEWORK

2320kg lighter per m³

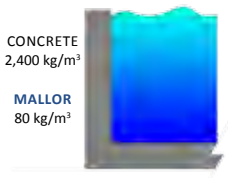

COMPARATIVE WATER VOLUME TABLE

920kg lighter per m³

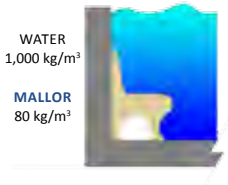

Volume of compact bench 0.27 m³

MODULAR PREFABRICATED POOLS - ONE-OFF PROJECTS

IBEROSTAR BAHIA PALMA pool

74,520 kg concrete
2,484 kg prefabricated modules
31.05 m³









CALDEA KIDS pool

85,104 kg concrete
2,837 kg prefabricated modules
35.46 m³

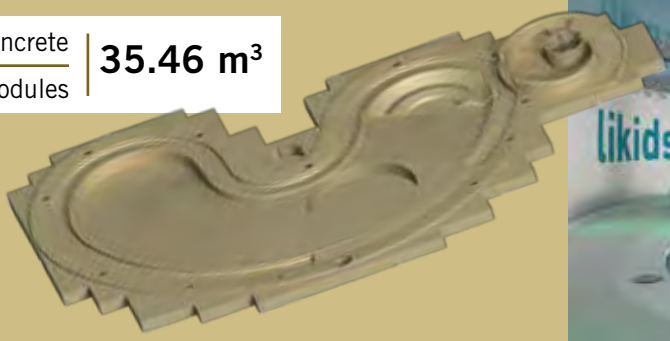







INOXPOOL

InoxPool

Constructed in one piece of AISI-316L satin stainless steel. Thickness of 2 mm. With overflow channel. Non-slip floor. Hydraulic pre-installation included. Ready to connect. Easy installation, without building work.

Total security and quality. In order to satisfy all your needs we have designed these models of stainless steel pools for those looking for an elegant and sober lifestyle. The quality of their materials and finishes set them apart. They are a gift for the senses!

2 Differents models:

COMFORT



SPORT







INOXPOOL

Model comparison

							
	5 x 3 x 1.2 m	7 x 3 x 1.2 m		9 x 3 x 1.2 m		12 x 3 x 1.2 m	
MODELS	**Sport**	**Comfort**	**Sport**	**Comfort**	**Sport**	**Comfort**	**Sport**
Code	**71503**	**71509**	**71510**	**71516**	**71517**	**71523**	**71524**
General specifications							
Internal dimensions (m)	5 x 2.85 x 1.2	7 x 2.85 x 1.2		8.84 x 2.85 x 1.2		11.84 x 2.85 x 1.2	
External dimensions (m)	5.7 X 3.6 X 1.3	7.7 X 3.6 X 1.3		9.6 X 3.6 X 1.3		12.6 X 3.6 X 1.3	
Water capacity (m^3)	18	24		31		41	
Empty weight / Full weight (kg)	2300 / 20300	3300 / 27300	2550 / 26550	3700 / 34700	3050 / 34050	4500 / 45500	3850 / 44850
Characteristics							
Skimmers	-	-	-	-	-	-	-
Overflow suction	2	2	2	3	3	4	4
Return inlet	3	4	3	5	4	6	5
Bottom cleaner nozzle	1	1	1	1	1	2	2
Main drains	2	2	2	2	2	2	2
Projectors	2	2	2	2	2	3	3
Accessories							
Ladder (3 steps)	•	-	•	-	•	-	•
Steps	-	•	-	•	-	•	-
Hydromassage bench	-	•	-	•	-	•	-
Hydromassage cascade	-	•	-	•	-	•	-
Hydromassage water jet	-	•	-	•	-	•	-
Hydromassage beds	-	•	-	•	-	•	-
Countercurrent	•	-	•	-	•		•
Cover	-	•		•		•	-
Recommended equipment							
Hydraulic button and timer	-	**45218 + 35761**	-	**45218 + 35761**	-	**45218 + 35761**	-
Blower pump for hydro beds	-	**31091**	-	**31091**	-	**31091**	-
Blower pump for hydro bank	-	**35388**	-	**35388**	-	**35388**	-

INOXPOOL

Installation

PREPARATION OF THE GROUND



The base the spa or pool must be prepared.

TRANSFER TO LOCATION



Manufactured in one piece, your transfer must be made by an authorized mode of transport.



The transfer must be made in a reinforced trailer or truck so that it arrives at its destination in perfect condition.

TRANSFER BY CRANE



Facilities must have easy access (outside) to be able to install the crane that will help to unload the Spa or Pool and put it in place.

UNLOADING THE POOL



The installation must be checked and secured so that everything is in perfect order.

LEVELING AND ADJUSTMENTS



Assembling the connections and putting it into operation is the last step before you can enjoy a relaxing and dreamed of space of well-being.

Ask for your new **Spa & Pool INOX SOLUTION** catalogue by AstralPool





SKYPOOL COMMERCIAL POOLS

ABOUT SKYPOOL

PANEL POOLS, THE VERY LATEST TECHNOLOGY THAT ENSURES PRECISION AND ACCURACY



The easiest, quickest and surest way of building any required residential and commercial pool. SkyPool is AstralPool's range of prefabricated panel pools that can be adapted to fit existing infrastructures or new ones.

The use of these totally prefabricated panels that are easy to fasten and assemble together means that an in-ground or above-ground pool can be built in record time.

The steel panels undergo hot-dip galvanisation in a bath of zinc, which gives them excellent protection against rusting so that they last longer and their safety is guaranteed throughout their service life.

SkyPool, experts in end-to-end solutions

Thanks to SkyPool, AstralPool is the undisputed world leader in prefabricated pools made of galvanized steel panels. Our flexibility and drive, in addition to the way we adapt to the needs and regulations of each market have led us to build pools in more than 60 countries, which has made us one of the companies with the greatest international outreach in the sector.

Award-winning competition pools.

As leaders in this sector, we have longstanding experience in the development of solutions for the world of competition. We make pools of any size including the required by FINA standards and regulations.

End-to-end solutions.

AstralPool has a multidisciplinary team able to give you support in the development of your project from beginning to end, as well as the degree of experience and know-how expected of a world leader:

· Project analysis.
· Preliminary design study and quote.
· Advice and water treatment.
· Manufacture.
· Worksite management.
· Installation of complete solutions.

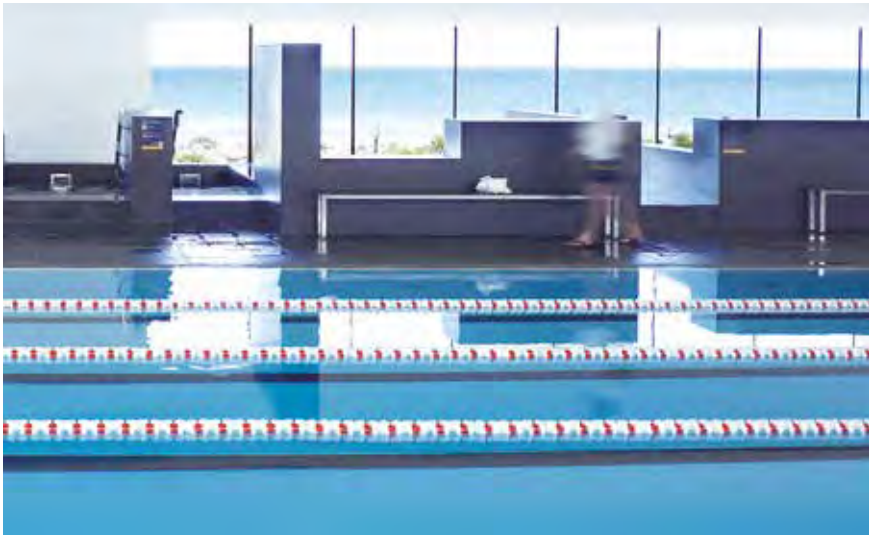

SKYPOOL COMMERCIAL POOLS

SkyPool is the best choice for many reasons.

Quick

The use of completed prefabricated components together with the easy assembly system considerably reduces the time required to build a pool.

Versatile

This system can be used for any design, whatever a pool's shape.

Long-lasting

New design and manufacturing systems are used to obtain maximum quality, functionality and durability of all pool components. The metal structure has a 20-year warranty.

Lightweight

Choose a place and we'll build a pool there! The advantage of the lightweight structure that is easily adaptable is that pools can be built even in awkward conditions. Small spaces, rooftops, stadiums, etc.

Inexpensive

As no complex infrastructure has to be built, a high performance pool can be obtained at a lower cost.

Reliable

The use of the very best components, together with a totally safe construction system, delivers the reliability required in this type of facility.

Sustainable

All components can be recycled, are non-contaminating and are manufactured using processes with a low environmental impact.

Advantages of SkyPool

1. Technology

Thanks to the technology used in the construction of SkyPool panels, they are fully compliant with FINA regulations. There is an extremely easy and efficient system for adjusting the level and angles of a pool. The access through the system's manholes enables all adjustment to be made.

2. Watertight. No leaks.

There are no cracks. The perfect fit of the assembled SkyPool panels covered by the liner ensure the pool shell is completely watertight. Furthermore, the system has been designed to withstand land movements and subsidence, in addition to the pressure exerted when a pool is emptied or filled.

3. High resistance finishes.

The PVC-P reinforced liner used by SkyPool is watertight, which gives these pools a high level of safety, protection, robustness and durability. Furthermore, it is resistant to chlorinated water and aging caused by external agents. The liner ensures elasticity and is available with a wide range of optional features (colours, etc.).

4. Quicker installation time.

It can take as much as two months off the time to manufacture and install an Olympic SkyPool (50 x 25 x 2 m) in comparison with a concrete pool. This considerably reduces indirect and opportunity costs.

5. Low maintenance.

As there is access to the pool perimeter, any problems are more quickly located, so repair and maintenance work is easier and costs less.

6. Earthquakes resistant.

Build earthquake-resistant pools. The team of Skypool engineers calculates and adapts the system according to the seismic regulations of each country. Under request.

SKYPOOL COMMERCIAL POOLS

SkyPool panel models



BARCELONA PANEL

Freestanding galvanized steel panel suitable for pools of up to 2.5 m. Fastenings are only required at the bottom.



CAR PANEL

Freestanding galvanized steel panel suitable for pools of up to 3 m. Fastenings are required at the top and on the bottom.



RENOVATION PANEL

Freestanding galvanized steel panel suitable for pools of up to 2.5 m. Fastenings are only required at the bottom.



MELBOURNE PANEL

Freestanding galvanized steel panel suitable for pools of up to 3 m with structure to install the surround of the pool.

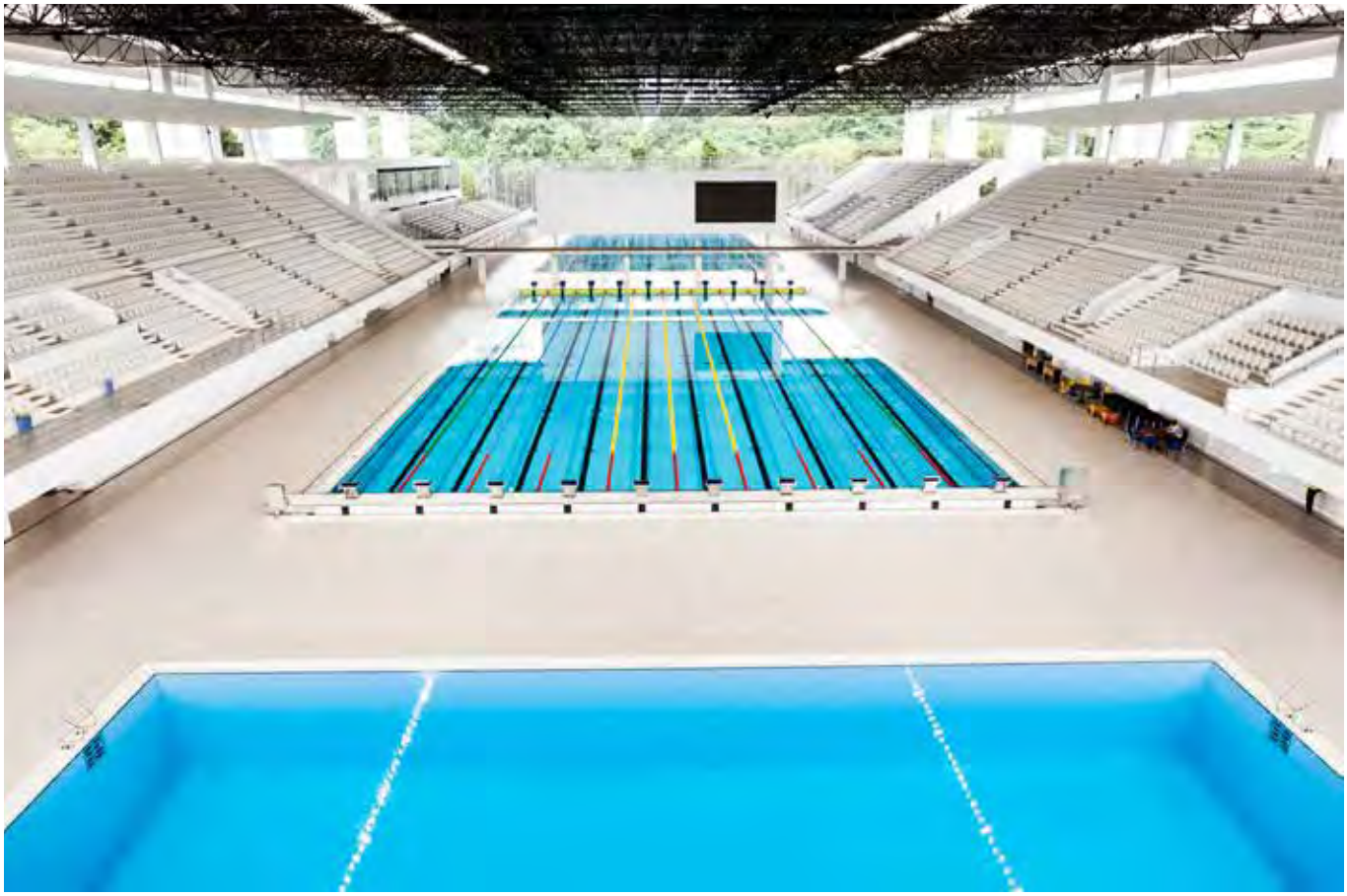

BLUESPRING

Bluespring

When the sides of the overflow blend with the sky and with the surrounding atmosphere, the fulfillment of the perfect pool is realized, the time when the pool disappears and binds to the infinite lines.

Bluespring is designed to give space to the architectural interventions to harness the magic of the different types of overflow available. The structure has been designed to maintain the integrity of the performances over the years, getting its point of excellence in the reliability using. The best technology at the service of demanding customers who believe in the beauty of their own water space.

A Reinforced concrete slab
B Steel structure
C Compensation channel
D Perimetric flooring
E Reinforced membrane
F Concrete reinforcement
G Terrapieno
H Fasteners



POOL WARRANTY: 5 YEARS

ACCESSORIES WARRANTY: 2 YEARS

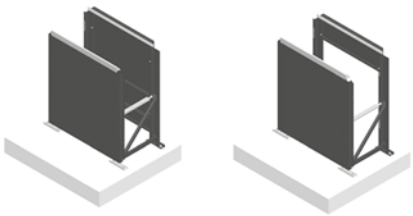

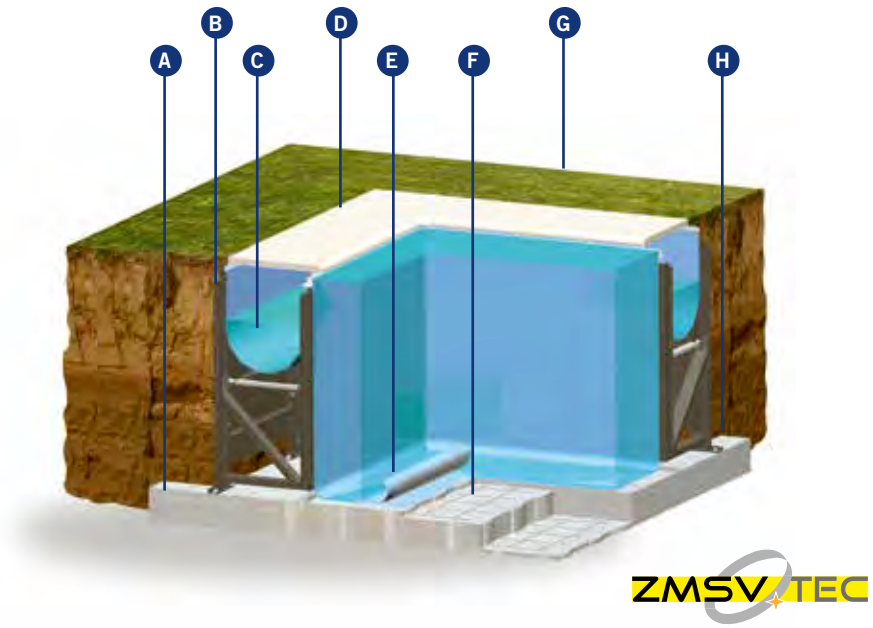

The Bluespring structure technology is made of galvanized and passivated steel with low-carbon Z275 coverage, treated with the exclusive protective Laghetto ZMSV-TEC coating.

All the ground supports, the threaded rods anchors, the moving parts and the nuts and bolts are made of stainless steel.

The Bluespring ZMSV-TEC structure provides a full height ground retaining panel if used as a classical inground pool, or is equipped with a shortened panel in case it is mounted in above ground situations.

Bluespring offers two standard heights for the pool panel: **130 and 152 centimeters**.

Higher or variable water depth can be obtained directly by varying the design of the bottom slab.

Bluespring compensation system

With Bluespring balance tank is not necessary, thanks to the use of big and capacious overflow duct, which allows to avoid the construction of the external compensation tank, with consequent and evident of space and cost savings.

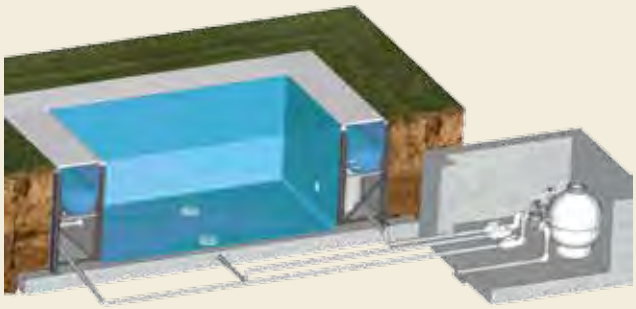

BLUESPRING



CLASSIC CUSTOM AND PROFESSIONAL









SPA & POOL **INOX SOLUTION**

E X C L U S I V I T Y



STAINLESS STEEL **CRAFTSMEN**

Our flexibility and dynamism, as well as our adaptation to the needs and regulations of each market, have led us to build steel solutions in more than 60 countries, making us one of the companies with the greatest international outreach in the sector.

INTEGRAL SOLUTIONS, UNIQUE DESIGNS AND CUSTOM SOLUTIONS DEVELOPED CREATE EXCLUSIVE SPACES IN A WELLNESS ENVIRONMENT.

We put at your disposal all the tools and our broad experience to turn your project into reality, adapting our designs to the client's needs

ASTRALPOOL

Av. Francesc Macià, 60, Planta 17
08208 Sabadell (Barcelona) Spain
Tel.: +34 93 724 39 00
www.astralpool.com
www.fluidra.com

FLUIDRA

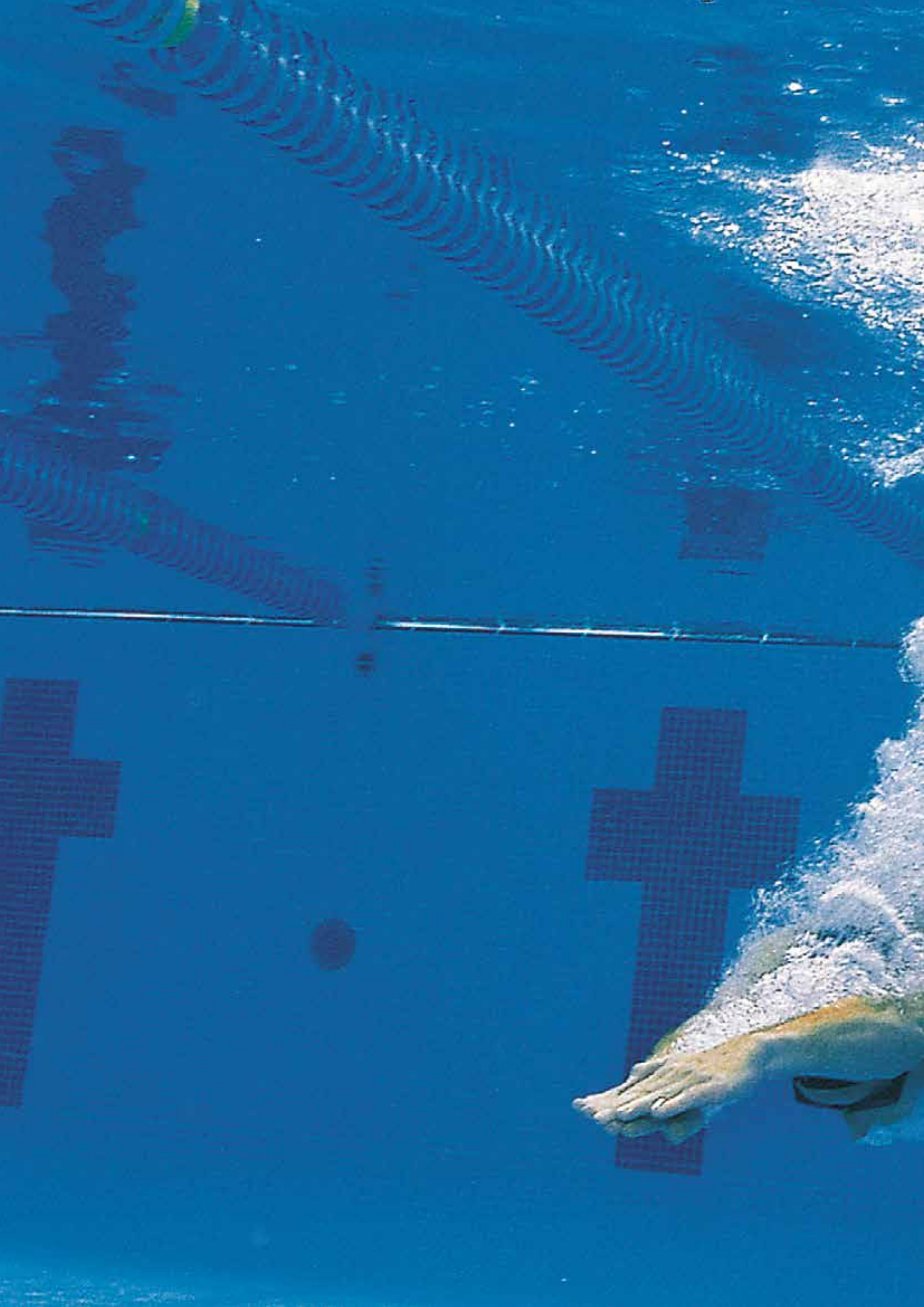



COMMERCIAL POOLS
FILTRATION

526 • Public pool filtration coding
527 • Laminated filters
532 • Bobbin wound filters
557 • Valve manifolds
559 • Control boxes
560 • Supports for valve manifolds
561 • Filtration media & accessories

PUBLIC POOL FILTRATION CODING

Coding

The filter code is composed of eight digits. The first five digits correspond to the filter code and the last three digits correspond to the model – this information is given in the tables below.

This codification system is used for the Praga, Oslo, Olot, Ampuria, Rodas, Vic, Europe, Vesubio and Delta filters.

Position	1	2	3	4	5	–	6	7	8

Position 1 to 5: Five digit code of the standard product.

Position 6 Specifies the nozzle plate and vinyester options	
0	Filter without nozzle plate
1	Filter with nozzle plate
2	Vinylester finish
3	With plate and vinylester

Position 7 Specifies side opening options	
0	Without nozzle plates
1	1 Ø 225 mm manhole
2	1 Ø 400 mm manhole
3	2 Ø 225 mm manholes
4	2 Ø 400 mm manholes
5	1 Ø 500 mm manhole
6	1 Ø 600 mm manhole

Position 8 Specifies sightglass options	
0	Without sightglasses
1	1 sightglass for laminated filter
2	1 Ø 135 mm sightglass
3	2 Ø 135 mm sightglasses
4	2 Ø 225 mm manholes

Notes: Rodas filters with nozzle plates are not available.
Ø 500 mm side opening for filters as of Ø 1050 mm.
Ø 600 mm side opening for filters as of Ø 1800 mm.
Maximum vinylester option of 0.5 ppm.

Please enquire pricing for various options:

- Vinylester finish
- Ø 225 mm and Ø 400 mm manhole
- Sightglass
- Plate

Head loss curve

Filters from Ø 1050 mm to Ø 3000 mm

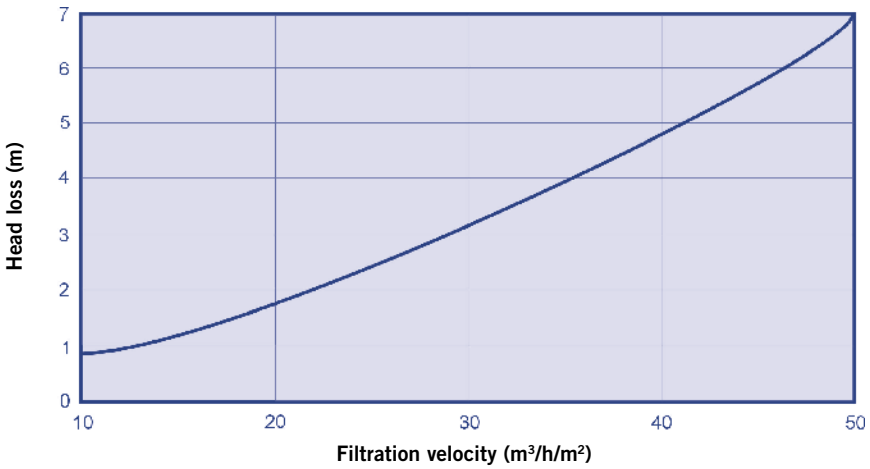

Filtration bed 1 m



Optional:
Standard American sizes

LAMINATED FILTERS

Vesubio filters - Commercial pool series

Made of polyester resin and fibreglass. Equipped with pressure gauge, and manual air and water purge valves. Ø 400 mm cover Suitable for filtration speeds of 20, 30, 40 and 50 $m^3/h/m^2$. Please ask your dealer for other speeds. All filters can be assembled with valve manifolds. 2½" sand discharge outlet.

Maximum pressure: 2.5 kg/cm².

Filtration bed 1 m

Diameter Ø mm	Filtration velocity $m^3/h/m^2$	Outlet Ø mm	Flow rate m^3/h	Code	Standard Packaging	Standard Weight Kg	Standard Volume m^3
1050	20	63	17	**41304**	1	110	2.25
	30/40	75	25/34	**41305**	1	110	2.25
	50	90	43	**41306**	1	110	2.25
1200	20/30	75	22/33	**41307**	1	125	3.37
	40/50	90	45/56	**41308**	1	125	3.37
1400	20	75	30	**41309**	1	152	4.41
	30	90	46	**41310**	1	152	4.41
	40/50	110	61/77	**41311**	1	152	4.41
1600	20	90	40	**41312**	1	185	5.66
	30/40	110	60/80	**41313**	1	185	5.66
	50	125	100	**41314**	1	185	5.66
1800	20	90	50	**41315**	1	257	7.40
	30	110	76	**41316**	1	257	7.40
	40	125	101	**41317**	1	257	7.40
	50	140	125	**41318**	1	257	7.40
2000	20	110	62	**41319**	1	360	9.48
	30	125	94	**41320**	1	360	9.48
	40	140	125	**41321**	1	360	9.48
	50	160	157	**41322**	1	360	9.48

Ø D (mm)	Filtration velocity ($m^3/h/m^2$)	Code	Connections		Flow rate	Pool volume (8h)	Filtration surface	C	A	B	Ø D	Sand load	Gravel load	Grade 1 glass load (57011)	Grade 2 glass load (57012)	Grade 3 glass load (57013)
			mm	inches	(m^3/h)	(m^3)	(m^2)	(mm)	(mm)	(mm)	(mm)	(kg)	(kg)	(kg)	(kg)	(kg)
1050	20	**41304**	63	2"	17	136	0,86	1545	465	500	760	1125	175	678	221	244
	30/40	**41305**	75	2½"	25/34	200/272										
	50	**41306**	90	3"	43	344										
1200	20/30	**41307**	75	2½"	22/33	176/264	1,13	1730	675	500	850	1350	275	846	276	304
	40/50	**41308**	90	3"	45/56	360/448										
1400	20	**41309**	75	2½"	30	240	1,54	1845	725	500	1085	1850	350	1146	374	412
	30	**41310**	90	3"	46	368										
	40/50	**41311**	110	4"	61/77	488/616										
1600	20	**41312**	90	3"	40	320	2,01	1850	710	500	1230	2723	450	1654	540	595
	30/40	**41313**	110	4"	60/80	480/640										
	50	**41314**	125	4½"	100	800										
1800	20	**41315**	90	3"	50	400	2,54	1915	755	570	1370	3175	550	1941	634	698
	30	**41316**	110	4"	76	608										
	40	**41317**	125	4½"	101	808										
	50	**41318**	140	5"	125	1000										
2000	20	**41319**	110	4"	62	496	3,14	2030	775	570	1560	3650	675	2253	736	810
	30	**41320**	125	4½"	94	752										
	40	**41321**	140	5"	125	1000										
	50	**41322**	160	6"	157	1256										

NB: Coding options according to table on page 526

Filtration bed 1 m



DOES NOT INCLUDE VALVE MANIFOLD

* May be coupled with 2" multiport valve

** May be coupled with 2½" multiport valve.

Optional: Standard American sizes

LAMINATED FILTERS

Europe filters

Made of polyester resin and fibreglass. Equipped with pressure gauge, and manual air and water purge valves. Ø 400 mm cover Suitable for filtration speeds of 20, 30, 40 and 50 $m^3/h/m^2$. Please ask your dealer for other speeds. All filters can be assembled with valve manifolds. 2½" sand discharge outlet.

Maximum pressure: 2.5 kg/cm².

Filtration bed 1 m

Diameter Ø mm	Filtration velocity $m^3/h/m^2$	Outlet Ø mm	Flow rate m^3/h	Code	Standard Packaging	Standard Weight Kg	Standard Volume m^3
1050	20*	63	17	**20070**	1	125	2.823
	30/40**	75	25/34	**20071**	1	125	2.823
	50	90	43	**20072**	1	125	2.823
1200	20/30	75	22/33	**20068**	1	150	3.597
	40/50	90	45/56	**20069**	1	150	3.597
1400	20	75	30	**21497**	1	214	4.90
	30	90	46	**21498**	1	214	4.90
	40/50	110	61/77	**21499**	1	214	4.90
1600	20	90	40	**21500**	1	230	6.50
	30/40	110	60/80	**21501**	1	230	6.50
	50	125	100	**21502**	1	230	6.50
1800	20	90	50	**21503**	1	344	8.80
	30	110	76	**21504**	1	344	8.80
	40	125	101	**21505**	1	344	8.80
	50	140	125	**21506**	1	344	8.80
2000	20	110	62	**21507**	1	435	10.58
	30	125	94	**21508**	1	435	10.58
	40	140	125	**21509**	1	435	10.58
	50	160	157	**21510**	1	435	10.58
2350	20	125	87	**33820**	1	600	15.70
	30	140	130	**33822**	1	600	15.70
	40	160	174	**33824**	1	600	15.70
	50	200	217	**33826**	1	600	15.70
2500	20	140	100	**34302**	1	630	-
	30	160	150	**34303**	1	630	-
	40	200	200	**34304**	1	630	-
	50	225	225	**34305**	1	630	-

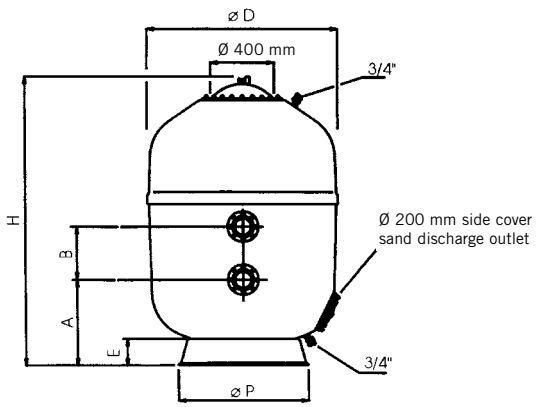

Ø (mm)	1050	1200	1400	1600	1800	2000	2350	2500
Depth of sand medium (m)	1	1	1	1	1	1	1	1
H (mm)	1860	1860	2000	2100	2200	2200	2430	2525
B (mm)	270*	350	400	400	400	400	400	500
A (mm)	540	570	615	710	725	805	950	1015
Ø P (mm)	760	850	1083	1230	1370	1558	1830	1830
E (mm)	170	180	240	250	270	300	355	-
Filtration surface areas (m^2)	0,86	1,13	1,54	2,01	2,54	3,14	4,34	4,9
Volume (l)	1250	1575	2185	2965	3850	4850	7230	9385
Sand load (kg)	1050	1360	1820	2375	3010	3750	5000	5600
Gravel load (kg)	265	325	410	515	760	1060	2000	2920
Grade 1 glass load (57011) (kg)	683	876	1160	1504	1959	2497	3622	4395
Grade 2 glass load (57012) (kg)	223	286	379	491	640	816	1183	1436
Grade 3 glass load (57013) (kg)	246	315	417	541	705	898	1302	1580
Total operating weight (kg)	2060	2600	3500	4700	6150	7800	10786	13800

* For 2" multiport valve the height will be 230 mm.

NB: Coding options according to table on page 526

Filtration bed 1.2 m



DOES NOT INCLUDE VALVE MANIFOLD

Optional: Standard American sizes

LAMINATED FILTERS

Europe filters

Maximum pressure: 2.5 kg/cm². | **Filtration bed 1.2 m**

Diameter Ø mm	Filtration velocity m³/h/m²	Outlet Ø mm	Flow rate m³/h	Code	Standard Packaging	Standard Weight Kg	Standard Volume m³
1050	20*	63	17	**31857**	1	140	3.04
	30/40**	75	25/34	**31858**	1	140	3.04
	50	90	43	**31859**	1	140	3.04
1200	20/30	75	22/33	**31860**	1	155	3.89
	40/50	90	45/56	**31861**	1	155	3.89
1400	20	75	30	**21511**	1	215	6.27
	30	90	46	**21512**	1	215	6.27
	40/50	110	61/77	**21513**	1	215	6.27
1600	20	90	40	**21514**	1	255	8.31
	30/40	110	60/80	**21515**	1	255	8.31
	50	125	100	**21516**	1	255	8.31
1800	20	90	50	**21517**	1	385	10.65
	30	110	76	**21518**	1	385	10.65
	40	125	101	**21519**	1	385	10.65
	50	140	125	**21520**	1	385	10.65
2000	20	110	62	**21521**	1	425	12.90
	30	125	94	**21522**	1	425	12.90
	40	140	125	**21523**	1	425	12.90
	50	160	157	**21524**	1	425	12.90
2350	20	125	87	**33821**	1	630	16.80
	30	140	130	**33823**	1	630	16.80
	40	160	174	**33825**	1	630	16.80
	50	200	217	**33827**	1	630	16.80
2500	20	140	100	**34306**	1	860	-
	30	160	150	**34307**	1	860	-
	40	200	200	**34308**	1	860	-
	50	225	225	**34309**	1	860	-

Ø (mm)	1050	1200	1400	1600	1800	2000	2350	2500
Depth of sand medium (m)	1,2	1,2	1,2	1,2	1,2	1,2	1,2	1,2
H (mm)	2060	2060	2200	2300	2400	2400	2630	2675
B (mm)	270	350	400	400	400	400	400	500
A (mm)	540	570	615	710	725	805	950	1015
Ø P (mm)	760	850	1085	1230	1370	1560	1830	1830
E (mm)	170	180	240	250	270	300	355	-
Filtration surface areas (m²)	0,86	1,13	1,54	2,01	2,54	3,14	4,34	4,90
Volume (l)	1500	1900	2650	3560	4620	5820	8060	-
Sand load (kg)	1300	1660	2220	2950	3680	4600	6130	6680
Gravel load (kg)	265	325	410	515	760	1060	2000	2920
Grade 1 glass load (57011) (kg)	815	1034	1370	1806	2311	2944	4215	4962
Grade 2 glass load (57012) (kg)	266	338	448	590	755	962	1377	1621
Grade 2 glass load (57012) (kg)	293	372	493	649	831	1059	1516	1784
Total operating weight (kg)	2375	2950	4000	5475	6950	8800	12180	14460

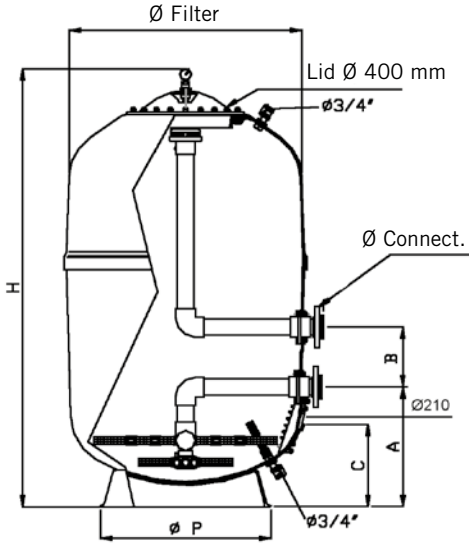

Filtration bed 1.2 m

LAMINATED FILTERS

DIN filters

Laminated filter made of polyester resin and fibreglass. According to standard DIN 19643/19605. Ral 5015 colour code.

It is characterised by:

- Bolts in 316 AISI.
- Outlet clear water above nozzle plate in Europe.
- Nozzle plate system 65 units / m².
- 5 years warranty in tank.
- Maximum pressure: 2.5 bar.
- Maximum temperature 50º C.
- Sight glass 50 x 300 mm (one or two sight glasses, depending on model).
- Filter bed height 1,2 m.
- Freeboard 0,5 m.
- Connections in polyester.
- Lateral manhole d.400 in all models except Norma DIN 650 with d.200 mm.
- Top manhole d.400 mm in all models except Norma DIN 650 and 800 with d.200 mm.

OPTIONAL FEATURES

- Maximum pressure 4 bar.
- Ozone resistance 10mg/l (DIN 18820).



SINGLE LAYER



MULTILAYER

	Code	Standard Pack	Standard Weight in kg	Standard Volume in m³
Monolayer - 1 sight glass				
DIN Standard				
Ø 650 mm	**66033 126 000**	1	-	1.88
Ø 800 mm	**66034 126 000**	1	-	2.70
Ø 1000 mm	**66035 126 000**	1	-	4.30
Ø 1200 mm	**66036 126 000**	1	-	4.98
Europe DIN				
Outlet water above nozzle plate				
Ø 1400 mm	**66037 126 000**	1	-	7.85
Ø 1600 mm	**66038 126 000**	1	-	9.40
Ø 1800 mm	**66039 126 000**	1	-	12.40
Ø 2000 mm	**66040 126 000**	1	-	15.49
Outlet water under nozzle plate				
Ø 1400 mm	**66685 126 000**	1	-	7.85
Ø 1600 mm	**66686 126 000**	1	-	9.40
Ø 1800 mm	**66687 126 000**	1	-	12.40
Ø 2000 mm	**66688 126 000**	1	-	15.49
Multilayer - 2 sight glasses				
DIN Standard				
Ø 650 mm	**66033 127 000**	1	-	1.88
Ø 800 mm	**66034 127 000**	1	-	2.70
Ø 1000 mm	**66035 127 000**	1	-	4.30
Ø 1200 mm	**66036 127 000**	1	-	4.98
Europe DIN				
Outlet water above nozzle plate				
Ø 1400 mm	**66037 127 000**	1	-	7.85
Ø 1600 mm	**66038 127 000**	1	-	9.40
Ø 1800 mm	**66039 127 000**	1	-	12.40
Ø 2000 mm	**66040 127 000**	1	-	15.49
Outlet water under nozzle plate				
Ø 1400 mm	**66685 127 000**	1	-	7.85
Ø 1600 mm	**66686 127 000**	1	-	9.40
Ø 1800 mm	**66687 127 000**	1	-	12.40
Ø 2000 mm	**66688 127 000**	1	-	15.49

LAMINATED FILTERS

DIN filters

Europe DIN

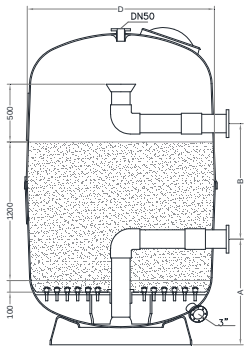

DIN Standard

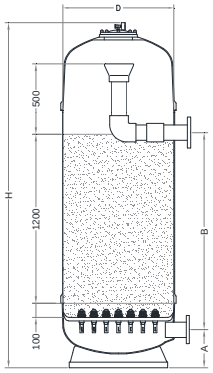

Monolayer - Outlet water above nozzle plate for European DIN.

Europe DIN

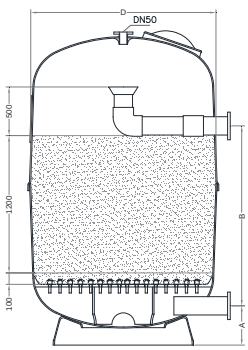

DIN Standard

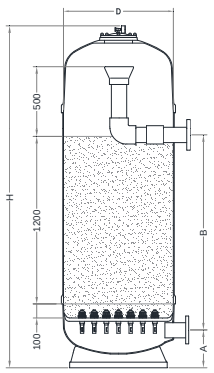

Monolayer - Outlet water under nozzle plate.

Europe DIN

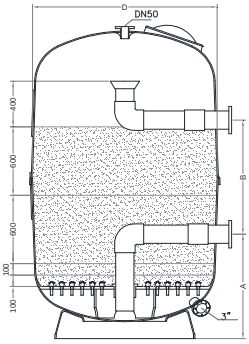

DIN Standard

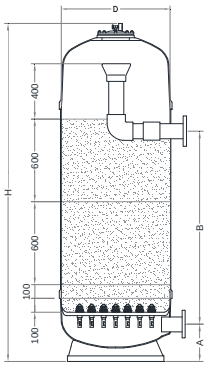

Multilayer - Outlet water above nozzle plate for European DIN.

Europe DIN

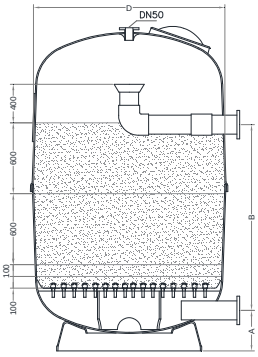

DIN Standard

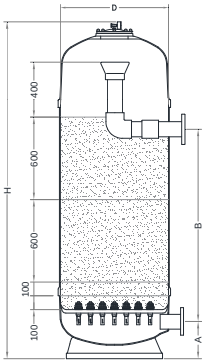

Multilayer - Outlet water under nozzle plate.

TECHNICAL FEATURES

		DIN Standard				Europe DIN			
Monolayer (1 sight glass)	Outlet water above nozzle plate	66033 126 000	66034 126 000	66035 126 000	66036 126 000	66037 126 000	66038 126 000	66039 126 000	66040 126 000
	Outlet water under nozzle plate	66033 126 000	66034 126 000	66035 126 000	66036 126 000	66685 126 000	66686 126 000	66687 126 000	66688 126 000
Multilayer (2 sight glasses)	Outlet water above nozzle plate	66033 127 000	66034 127 000	66035 127 000	66036 127 000	66037 127 000	66038 127 000	66039 127 000	66040 127 000
	Outlet water under nozzle plate	66033 127 000	66034 127 000	66035 127 000	66036 127 000	66685 127 000	66686 127 000	66687 127 000	66688 127 000
Ø (mm)		650	800	1000	1200	1400	1600	1800	2000
Filtration velocity ($m^3/h/m^2$)		20 / 30	20 / 30	20 / 30	20 / 30	20 / 30	20 / 30	20 / 30	20 / 30
Flow (m^3/h)		7 / 10	10 / 15	16 / 23	23 / 34	31 / 46	40 / 60	51/76	63/94
H (mm)		2411	2442	2617	2752	2650	2738	2800	2880
A (mm)	Outlet water above nozzle plate	-	-	-	-	915	915	915	960
	Outlet water under nozzle plate	270	270	355	385	400	400	400	400
B (mm)	Outlet water above nozzle plate	-	-	-	-	1000	1000	1000	1000
	Outlet water under nozzle plate	1400	1400	1400	1400	1400	1400	1400	1400
D (mm)		668	818	1033	1234	1440	1640	1840	2040
Input connection (mm)		90	110	140	160	160	160	200	200
Output connection (mm)		75	90	110	140	140	160	160	200
MULTILAYER	1ª layer) Gravel 3 – 5 mm (kg)	50	80	120	175	240	310	395	485
	2ª layer) Gravel 2 – 3 mm (kg)	50	80	120	175	240	310	395	485
	3ª layer) Sand 0.4 – 0.8 mm (kg)	270	407	635	915	1245	1630	2060	2545
	4ª layer) Anthracite 0.6 – 1.6 mm (l)	160	240	375	540	740	965	1220	1508
SINGLE LAYER	Sand 0,7 -1.2 mm (kg)	535	815	1270	1830	2495	3255	4120	5090
	Gravel 2 – 3 mm (kg)	50	80	120	175	240	310	395	485
	Grade 1 glass load (57011) (kg)	305	470	730	1050	1430	1865	2360	2915
	Grade 2 glass load (57012) (kg)	100	155	240	340	470	610	770	950
	Grade 2 glass load (57012) (kg)	110	170	260	380	515	670	850	1050

Filtration bed 1 m



DOES NOT INCLUDE VALVE MANIFOLD

For filters with nozzle plates, a side opening (Ø 400 mm or Ø 225 mm) should be made for emptying the filter medium.

Optional: Standard American sizes



Filter base



Collector arms

BOBBIN WOUND FILTERS

Vic filters

Industrial bobbin wound filters with diameters from 1050 mm to 3000 mm, with the corresponding flange connections for different filtration velocities. Replaces the Atenas model. New top cover system with quick closing system 400 x 500 mm opening. The air relief valve is fitted into the cover in order to help eliminate air from the filter. 1½" collector arms injected in ABS at the necessary lengths for each of the filters and without joints. Lengths from 90 mm to 525 mm. A reduced head loss is achieved thanks to the greater diameter of the arms.

The 90 mm diameter collector tubing is injected in PVC. Water purge and air relief are faster due to a 1" connection. The distance between the top sand layer and the diffusor head ("freeboard") has been increased to ensure greater water distribution during filtration and to prevent sand entering into the laterals during the backwashing.

In the case of filters with diameters of 2350 mm, 2500 mm and 3000 mm, the top cover is Ø 400 mm that screws into place and has a PRFV high resistance neck ring. The 200 mm, 225 mm and 250 mm connections are in PVC and the foot is plain, both of which are features very similar to the Oslo and Prague models.

Maximum pressure: 2.5 kg/cm².

Diameter Ø mm	Filtration velocity m³/h/m²	Outlet Ø mm	Flow rate m³/h	Code	Standard Packaging	Standard Weight Kg	Standard Volume m³
1050	20	63	17	**11511N**	1	120	1.9
	30-40	75	25-34	**11517N**	1	120	1.9
	50	90	43	**11526N**	1	120	1.9
1200	20-30	75	22-33	**11512N**	1	154	2.7
	40-50	90	45-56	**11522N**	1	154	2.7
1400	20	75	30	**11513N**	1	173	3.7
	30	90	46	**11518N**	1	173	3.7
	40-50	110	61-77	**11523N**	1	173	3.7
1600	20	90	40	**11514N**	1	235	5.0
	30-40	110	60-80	**11519N**	1	235	5.0
	50	125	100	**11527N**	1	235	5.0
1800	20	90	50	**11515N**	1	270	6.4
	30	110	76	**11520N**	1	270	6.4
	40	125	101	**11524N**	1	270	6.4
	50	140	125	**11528N**	1	270	6.4
2000	20	110	62	**11516N**	1	295	8.7
	30	125	94	**11521N**	1	295	8.7
	40	140	125	**11525N**	1	295	8.7
	50	160	157	**11529N**	1	295	8.7

NB: Technical features in accordance with the table on the following page

Filtration bed 1 m



DOES NOT INCLUDE VALVE MANIFOLD

For filters with nozzle plates, a side opening (Ø 400 mm or Ø 225 mm) should be made for emptying the filter medium.

Optional: Standard American sizes



Filter base



Collector arms

BOBBIN WOUND FILTERS

Vic filters

Code 2.5 kg	Ø filter mm	A mm	B mm	C mm	H mm	Ø P mm	Ø flange mm	Filtration surface area (m^2)
11511N	1050	685	85	535	1950	760	63	0.86
11517N	1050	685	85	535	1950	760	75	0.86
11526N	1050	685	85	535	1950	760	90	0.86
11512N	1200	680	85	530	1970	860	75	1.13
11522N	1200	680	85	530	1970	860	90	1.13
11513N	1400	685	85	575	2000	1020	75	1.54
11518N	1400	685	85	575	2000	1020	90	1.54
11523N	1400	685	85	575	2000	1020	110	1.54
11514N	1600	695	85	625	2050	1150	90	2.01
11519N	1600	695	85	625	2050	1150	110	2.01
11527N	1600	695	85	625	2050	1150	125	2.01
11515N	1800	710	85	670	2080	1320	90	2.54
11520N	1800	710	85	670	2080	1320	110	2.54
11524N	1800	710	85	670	2080	1320	125	2.54
11528N	1800	710	85	670	2080	1320	140	2.54
11516N	2000	730	85	715	2150	1470	110	3.14
11521N	2000	730	85	715	2150	1470	125	3.14
11525N	2000	730	85	715	2150	1470	140	3.14
11529N	2000	730	85	715	2150	1470	160	3.14

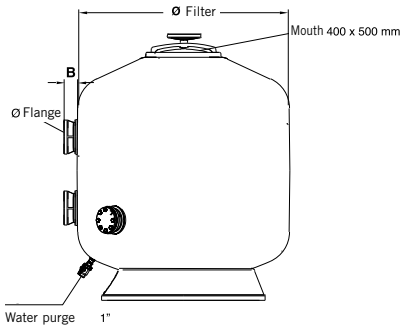

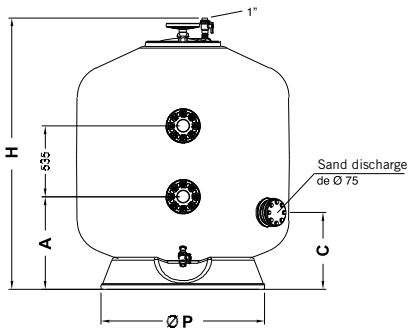

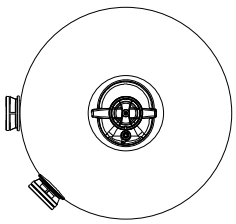

Type	Ø	1050	1200	1400	1600	1800	2000
Single-layer collector arms	Sand load (kg)	950	1375	1650	2150	2800	3800
	Gravel load (kg)	300	300	450	675	750	1050
	Grade 1 glass load (57011) (kg)	648	872	1091	1465	1844	2519
	Grade 2 glass load (57012) (kg)	212	285	356	479	602	823
	Grade 2 glass load (57012) (kg)	233	313	392	527	663	906
Single layer nozzle plate	Sand load (kg)	700	1200	1400	1850	2400	3300
	Gravel load (kg)	150	175	250	300	400	500
	Grade 1 glass load (57011) (kg)	442	717	860	1121	1460	1982
	Grade 2 glass load (57012) (kg)	144	234	281	366	477	647
	Grade 2 glass load (57012) (kg)	159	258	309	403	525	173

Filtration bed 1 m



DOES NOT INCLUDE VALVE MANIFOLD

OTHER SPECIFIC DEPTHS MAY BE MADE TO ORDER.

THE Ø 3000 mm FILTERS WILL BE SHIPPED BY SPECIAL DELIVERY. ASK YOUR DEALER ABOUT ADDITIONAL COSTS.

For filters with nozzle plates, a side opening (Ø 400 mm or Ø 225 mm) should be made for emptying the filter medium.

Optional: Standard American sizes

BOBBIN WOUND FILTERS

Praga filters

Polyester and fibreglass single-layer filter Ø400mm lid. Equipped with pressure gauge panel, manual air and water bleed valves and drain plug. Suitable for filtration speeds of 20, 30, 40 and 50 $m^3/h/m^2$.
For other filtration velocities, please enquire.

Maximum pressure: 2.5 kg/cm^2.

Diameter Ø mm	Filtration velocity $m^3/h/m^2$	Outlet Ø mm	Flow rate m^3/h	Code	Standard Packaging	Standard Weight Kg	Standard Volume m^3
1050	20	63	17	**00687**	1	120	2.45
	30-40	75	25-34	**00694**	1	120	2.45
	50	90	43	**00707**	1	120	2.45
1200	20-30	75	22-33	**00688**	1	155	3.38
	40-50	90	45-56	**00702**	1	155	3.38
1400	20	75	30	**00689**	1	198	4.75
	30	90	46	**00696**	1	198	4.75
	40	110	61	**00703**	1	198	4.75
1600	20	90	40	**00690**	1	255	6.13
	30-40	110	60-80	**00697**	1	255	6.13
	50	125	100	**00710**	1	255	6.13
1800	20	90	50	**00691**	1	285	7.25
	30	110	76	**00698**	1	285	7.25
	40	125	101	**00705**	1	285	7.25
	50	140	125	**00711**	1	285	7.25
	50	160	125	**33312**	1	285	7.25
2000	20	110	62	**00692**	1	355	9.92
	30	125	94	**00699**	1	355	9.92
	40	140	125	**00706**	1	355	9.92
	50	160	157	**05083**	1	355	9.92
2200	30	140	114	**56937**	1	450	13.9
	40	160	152	**56938**	1	450	13.9
2350	20	125	87	**00693**	1	500	17.04
	30	140	130	**00700**	1	500	17.04
	40	160	175	**04935**	1	500	17.04
2500	20	140	100	**08695**	1	750	19.5
	30	160	150	**08696**	1	750	19.5
	40	200	200	**08697**	1	750	19.5
3000	20	160	140	**08699**	1	1340	29.0
	30	200	212	**08700**	1	1340	29.0
	40	225	282	**08701**	1	1340	29.0

Note: See technical features on next page

Filtration bed 1 m



DOES NOT INCLUDE VALVE MANIFOLD

OTHER SPECIFIC DEPTHS MAY BE MADE TO ORDER.

THE Ø 3000 mm FILTERS WILL BE SHIPPED BY SPECIAL DELIVERY. ASK YOUR DEALER ABOUT ADDITIONAL COSTS.

Optional: Standard American sizes

BOBBIN WOUND FILTERS

Praga filters

Lid Ø 400 mm.

Maximum pressure: 4 kg/cm²

Diameter Ø mm	Filtration velocity m³/h/m²	Outlet Ø mm	Flow rate m³/h	Code	Standard Packaging	Standard Weight Kg	Standard Volume m³
1050	20	63	17	**09209**	1	155	2.45
	30-40	75	25-34	**00712**	1	155	2.45
	50	90	43	**00724**	1	155	2.45
1200	20-30	75	22-33	**00713**	1	215	3.38
	40-50	90	45-56	**00719**	1	215	3.38
1400	20	75	30	**09210**	1	300	4.75
	30	90	46	**00714**	1	300	4.75
	40-50	110	61-77	**00720**	1	300	4.75
1600	20	90	40	**09211**	1	330	6.13
	30-40	110	60-80	**00715**	1	330	6.13
	50	125	100	**00727**	1	330	6.13
1800	20	90	50	**09212**	1	400	7.25
	30	110	76	**00716**	1	400	7.25
	40	125	101	**00722**	1	400	7.25
	50	140	125	**00728**	1	400	7.25
2000	20	110	62	**09213**	1	475	9.92
	30	125	94	**00717**	1	475	9.92
	40	140	125	**00723**	1	475	9.92
	50	160	157	**05132**	1	475	9.92
2200	30	140	114	**57812**	1	560	13.9
	40	160	152	**57813**	1	560	13.9
2350	20	125	87	**09214**	1	630	17.04
	30	140	130	**09217**	1	630	17.04
	40	160	175	**09220**	1	630	17.04
2500	20	140	100	**09215**	1	930	19.5
	30	160	150	**09218**	1	930	19.5
	40	200	200	**09221**	1	930	19.5
3000	20	160	140	**09216**	1	1630	29.0
	30	200	212	**09219**	1	1630	29.0
	40	225	282	**09222**	1	1630	29.0

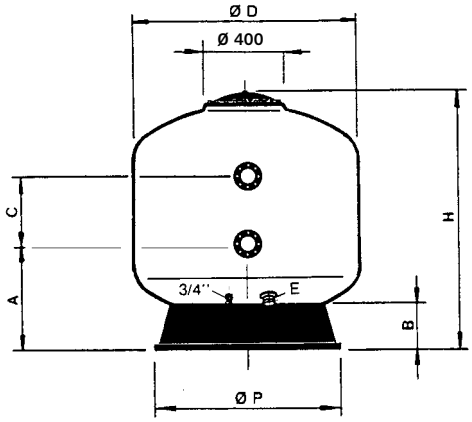

Ø (mm)	1050	1200	1400	1600	1800	2000	2200	2350	2500	3000
Depth of sand medium (m)	1	1	1	1	1	1	1	1	1	1
H (mm)	1640	1780	1755	1835	1875	2040	2440	2520	2550	2750
B (mm)	200	230	240	260	280	300	340	340	340	350
A (mm)	540	570	585	680	720	790	950	965	1080	1100
C (mm)	645	640	610	515	465	510	510	600	450	440
Ø P (mm)	755	940	1085	1230	1370	1550	1830	1859	2000	2365
E (mm)	90	90	90	140	140	140	140	140	140	140
Filtration surface areas (m²)	0.86	1.13	1.54	2.01	2.54	3.14	3.80	4.34	4.90	7.07
Volume (l)	1050	1500	2000	2600	3400	4400	6520	8045	9050	12800
Sand load (kg)	950	1375	1650	2150	2800	3800	4650	5275	5950	8600
Gravel load (kg)	300	300	450	675	750	1050	1900	1800	2200	3300
Grade 1 glass load (57011) (kg)	648	872	1091	1465	1844	2519	3388	3667	4220	6160
Grade 2 glass load (57012) (kg)	212	285	356	479	602	823	1107	1198	1378	2012
Grade 2 glass load (57012) (kg)	233	313	392	527	663	906	1218	1319	1518	2215
Total operating weight (kg)	2000	2700	3700	4900	6100	7900	11200	12550	13760	20200

Filtration bed 1 m

BOBBIN WOUND FILTERS



2.5 bar OC-1 Praga filters

Filters manufactured with a resin and fibreglass bobbin.

- Maximum working pressure: 2.5 bar
- Maximum temperature: 50ºC.
- Height of filter bed: 1 m or 1.2 m
- Colour: RAL 6027.
- Ø400 mm plastic lid.
- Ø¾" manual air bleed valve.
- Special interiors with 3mm slot arms.
- PVC connections.
- Average discharge of Ø90 mm in models Ø1050 to Ø1400 and Ø140 mm in models Ø1600 to Ø3000.
- Ø¾" manual water bleed valve.
- **Filter suitable for OC-1 medium only. Not suitable for sand, glass or other type of filtration media.**



OC-1 filtration medium

Maximum pressure: 2.5 kg/cm².

Diameter Ø mm	Filtration velocity m³/h/m²	Outlet Ø mm	Flow rate m³/h	Code	Standard Packaging	Standard Weight Kg	Standard Volume m³
1050	20	63	17	**00687 OC1**	1	286	-
	30/40	75	25/34	**00694 OC1**	1	286	-
	50	90	43	**00707 OC1**	1	286	-
1200	20/30	75	22/33	**00688 OC1**	1	354	-
	40/50	90	45/56	**00702 OC1**	1	354	-
1400	20	75	30	**00689 OC1**	1	504	-
	30	90	46	**00696 OC1**	1	504	-
	40/50	110	61/77	**00703 OC1**	1	504	-
1600	20	90	40	**00690 OC1**	1	600	-
	30/40	110	60/80	**00697 OC1**	1	600	-
	50	125	100	**00710 OC1**	1	600	-
1800	20	90	50	**00691 OC1**	1	744	-
	30	110	76	**00698 OC1**	1	744	-
	40	125	101	**00705 OC1**	1	744	-
	50	140	125	**00711 OC1**	1	744	-
	50	160	125	**33312 OC1**	1	744	-
2000	20	110	62	**00692 OC1**	1	997	-
	30	125	94	**00699 OC1**	1	997	-
	40	140	125	**00706 OC1**	1	997	-
	50	160	157	**05083 OC1**	1	997	-

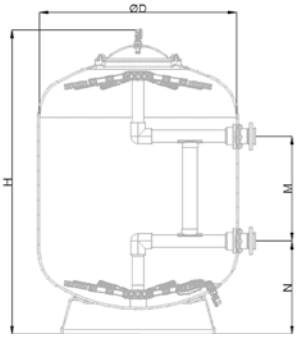

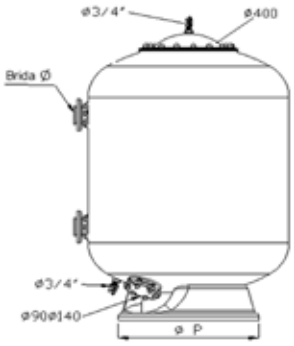

Ø (mm)	1050	1200	1400	1600	1800	2000
H (mm)	1640	1780	1755	1835	1875	2040
M (mm)	645	640	610	515	465	510
N (mm)	540	570	585	680	720	790
P (mm)	755	940	1085	1230	1370	1550
Filtration surface areas (m²)	0.86	1.13	1.54	2.01	2.54	3.14
OC-1 load (kg)	176	229	319	385	494	667

NB: Coding options according to table on page 526

THIS TABLE ONLY COVERS HIGH PERFORMANCE OSLO AND OLOT BOBBIN WOUND FILTERS



Oslo Olot

DOES NOT INCLUDE VALVE MANIFOLD

BOBBIN WOUND FILTERS

Vertical high performance bobbin wound filters

General features:
- 100% resistant to corrosion unlike conventional steel filters
- Maximum operating temperature 50º C
- Comply with European standards for pressure vessels 97/23/CE included in section 3 of article 3
- Hydraulic pressure test 1.5 times the maximum admissible pressure

Technical features of internal components:
- Internal components and pipe in PVC
- Laterals and nozzles in PP
- Airwash connection in models with underdrain nozzle plates
- Bolts, nuts and washers in AISI-316
- EPDM seals and gaskets.

Advantages of using an underdrain nozzle plate system over the conventional lateral system:
- There are no areas beneath the nozzles for water to stagnate as could occur in a lateral system
- Optimum filter bed back wash with an uniform water distribution
- Possibility of air wash with consequent saving of clean water
- The lateral manhole is recommended for sand discharge

The characteristics of liquids to be filtered should be indicated clearly when requesting ozone or other chemical resistant coatings for the filter interior.

RECOMMENDED SAND, GRAVEL AND GLASS LOADS

SINGLE-LAYER - Collector arms - Filtration bed 1.2 m in depth													
Diameter mm		**1050**	**1200**	**1400**	**1600**	**1800**	**2000**	**2200**	**2350**	**2500**	**2600**	**2800**	**3000**
Sand load (kg)		1300	1775	2300	3000	3800	4650	5625	6300	7075	8176	9483	10575
Gravel load (kg)		300	350	500	775	850	1150	1400	1800	1975	2123	2463	3850
Grade 1 glass load (57011) (kg)		832	1107	1457	1961	2419	3015	3651	4205	4699	5351	6207	7471
Grade 2 glass load (57012) (kg)		272	361	476	641	790	985	1193	1373	1535	1748	2027	2440
Grade 2 glass load (57012) (kg)		299	398	524	705	870	1084	1313	1512	1690	1924	2232	2687
MULTI--LAYER - Collector arms - Filtration bed 1.2 m in depth													
Diameter mm		**1050**	**1200**	**1400**	**1600**	**1800**	**2000**	**2200**	**2350**	**2500**	**2600**	**2800**	**3000**
Hydroanthracite (0.8-1.6) Kg	600 mm	450	575	775	1000	1275	1575	1900	2175	2450	2548	2956	3550
Sand (0,4-0,8) (Kg)	400 mm	475	625	825	1100	1400	1700	2050	2350	2675	2973	3448	3850
Gravel (1-2) (Kg)	100 mm	150	175	250	300	400	500	600	675	775	796	924	1100
Gravel (2-3) (Kg)	100 mm (1)	300	350	500	775	850	1150	1400	1800	1975	2123	2463	3850
SINGLE-LAYER - Nozzle plate - Filtration bed 1.2 m in depth													
Diameter mm		**1050**	**1200**	**1400**	**1600**	**1800**	**2000**	**2200**	**2350**	**2500**	**2600**	**2800**	**3000**
Sand load (kg)		1300	1775	2300	3000	3800	4050	5625	6300	7075	8176	9483	10575
Gravel load (kg)		150	175	250	300	400	500	600	675	775	796	924	1100
Grade 1 glass load (57011) (kg)		757	1019	1332	1725	2195	2376	3253	3645	4102	4690	5441	6102
Grade 2 glass load (57012) (kg)		247	333	435	563	717	776	1063	1191	1340	1532	1777	1993
Grade 2 glass load (57012) (kg)		272	367	479	620	789	845	1170	1311	1475	1687	1957	2194
MULTI--LAYER - Nozzle plate - Filtration bed 1.2 m in depth													
Diameter mm		**1050**	**1200**	**1400**	**1600**	**1800**	**2000**	**2200**	**2350**	**2500**	**2600**	**2800**	**3000**
Hydroanthracite (0.8-1.6) Kg	600 mm	450	575	775	1000	1275	1575	1900	2175	2450	2548	2956	3550
Sand (0,4-0,8) (Kg)	400 mm	475	625	825	1100	1400	1700	2050	2350	2675	2973	3448	3850
Gravel (1-2) (Kg)	100 mm	150	175	250	300	400	500	600	675	775	796	924	1100
Gravel (3-5) (Kg)	100 mm	150	175	250	300	400	500	600	675	775	796	924	1100
MULTI--LAYER - Nozzle plate - Filtration bed 1.5 m in depth													
Diameter mm		**1050**	**1200**	**1400**	**1600**	**1800**	**2000**	**2200**	**2350**	**2500**	**2600**	**2800**	**3000**
Hydroanthracite (0.8-1.6) Kg	600 mm	450	575	775	1000	1275	1575	1900	2175	2450	2548	2956	3550
Sand (0,4-0,8) (Kg)	600 mm	725	950	1250	1650	2100	2550	3100	3525	4025	4460	5172	5775
Gravel (1-2) (Kg)	100 mm	150	175	250	300	400	500	600	675	775	796	924	1100
Gravel (2-3) (Kg)	100 mm	150	175	250	300	400	500	600	675	775	796	924	1100
Gravel (3-5) (Kg)	100 mm	150	175	250	300	400	500	600	675	775	796	924	1100

Densities: Hydroanthracite = 0.8 Kg/dm^3 - Sand = 1.4 Kg/dm^3 - Gravel = 1.5 Kg/dm^3

(1) 100 mm above laterals

Filtration bed 1.2 m



DOES NOT INCLUDE VALVE MANIFOLD

OTHER SPECIFIC DEPTHS MAY BE MADE TO ORDER.

THE Ø 3000 mm FILTERS WILL BE SHIPPED BY SPECIAL DELIVERY. ASK YOUR DEALER ABOUT ADDITIONAL COSTS.

Optional:
Standard American sizes



Lateral manhole Ø 400 mm



Nozzle plate



Sightglass

BOBBIN WOUND FILTERS

Oslo filters

Characteristics:
Vertical high performance bobbin wound filters

Collector system:
A - Conventional collector system using laterals with 0.3 mm slots.
For working pressure of 2.5 and 4 bars.
B - Nozzle plate with 0.5 mm slots. For working pressure of 2.5 and 4 bars.

Fitted with:
- Pressure gauge panel
- Manual air vent and water purge

Options:
- Positioning of water connections flanges, sightglasses and manhole covers are provided according to customer specification.
- Diameters of connections and purges depend on customer specifications
- For other variations such as height, chemical resistant internal coating, pressure rating, etc., please enquire.

Maximum pressure: 2.5 kg/cm².

Diameter Ø mm	Filtration velocity m³/h/m²	Outlet Ø mm	Flow rate m³/h	Code	Standard Packaging	Standard Weight Kg	Standard Volume m³
1050	30	75	25	**04611**	1	207	2.5
	40	90	34	**04612**	1	207	2.5
1200	30	75	33	**04613**	1	234	3.2
	40	110	45	**04650**	1	234	3.2
1400	30	90	46	**04615**	1	294	4.7
	40	125	61	**04616**	1	294	4.7
1600	30	110	60	**04619**	1	360	6.2
	40	140	80	**04651**	1	360	6.2
1800	30	125	76	**04623**	1	416	8.5
	40	160	101	**04624**	1	416	8.5
2000	30	125	94	**04626**	1	483	10.3
	40	160	125	**04652**	1	483	10.3
2200	30	140	114	**56935**	1	567	14.8
	40	160	152	**56936**	1	567	14.8
2350	30	140	130	**08693**	1	651	15.8
	40	200	175	**08694**	1	651	15.8
2500	30	160	150	**08704**	1	820	20.8
	40	225	200	**08706**	1	820	20.8
3000	30	200	212	**08708**	1	1300	31.0
	40	250	282	**08710**	1	1300	31.0

Filtration bed 1.2 m



LARGE FILTERS OF MORE THAN 2500 mm WILL BE SHIPPED BY SPECIAL DELIVERY. ASK YOUR DEALER ABOUT ADDITIONAL COSTS.

For filters with nozzle plates, a side opening (Ø 400 mm or Ø 225 mm) should be made for emptying the filter medium.

Optional:
Standard American sizes

BOBBIN WOUND FILTERS

Oslo filters

Maximum pressure: 4 kg/cm²

Diameter Ø mm	Filtration velocity m³/h/m²	Outlet Ø mm	Flow rate m³/h	Code	Standard Packaging	Standard Weight Kg	Standard Volume m³
1050	30	75	25	**05168**	1	230	2.5
	40	90	34	**05173**	1	230	2.5
1200	30	75	33	**05169**	1	265	3.2
	40	110	45	**05174**	1	265	3.2
1400	30	90	46	**07436**	1	364	4.7
	40	125	61	**07437**	1	364	4.7
1600	30	110	60	**05170**	1	442	6.2
	40	140	80	**05175**	1	442	6.2
1800	30	125	76	**07438**	1	518	8.5
	40	160	101	**07439**	1	518	8.5
2000	30	125	94	**05171**	1	644	10.3
	40	160	125	**05176**	1	644	10.3
2200	30	140	114	**57810**	1	715	14.8
	40	160	152	**57811**	1	715	14.8
2350	30	140	130	**05172**	1	786	15.8
	40	200	175	**05177**	1	786	15.8
2500	30	160	150	**08712**	1	964	20.8
	40	225	200	**08714**	1	964	20.8
3000	30	200	212	**08716**	1	1613	31.0
	40	250	282	**08718**	1	1613	31.0

Type	Multi-layer collector arms					Multi-layer nozzle plate				
Ø D (mm)	Sand load (kg)	Gravel load kg	Grade 1 glass load (57011) kg	Grade 2 glass load (57012) kg	Grade 3 glass load (57013) kg	Sand load (kg)	Gravel load kg	Grade 1 glass load (57011) kg	Grade 2 glass load (57012) kg	Grade 3 glass load (57013) kg
1050	1300	300	832	272	299	1300	150	757	247	272
1200	1775	350	1107	361	398	1775	175	1019	333	367
1400	2300	500	1457	476	524	2300	250	1332	435	479
1600	3000	775	1961	641	705	3000	300	1725	563	620
1800	3800	850	2419	790	870	3800	400	2195	717	789
2000	4650	1150	3015	985	1084	4050	500	2376	776	845
2200	5625	1400	3651	1193	1313	5625	600	3253	1063	1170
2350	6300	1800	4205	1373	1512	6300	675	3645	1191	1311
2500	7075	1975	4699	1535	1690	7075	775	4102	1340	1475
3000	10575	3850	7471	2440	2687	10575	1100	6102	1993	2194

NB: Coding options according to table on page 526

BOBBIN WOUND FILTERS

Oslo filters

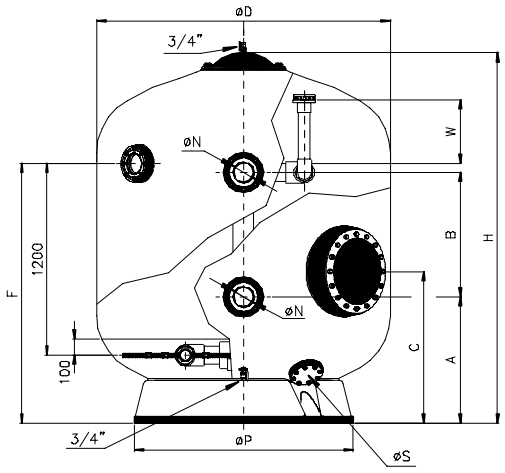

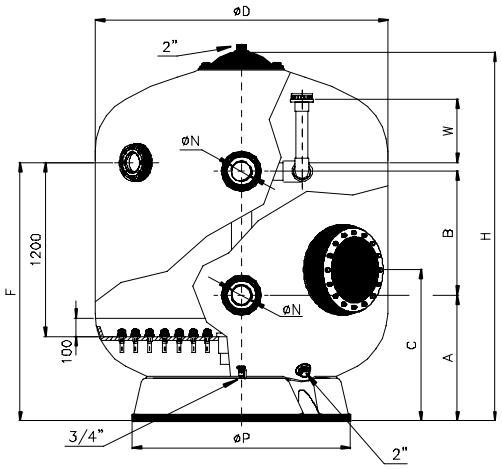

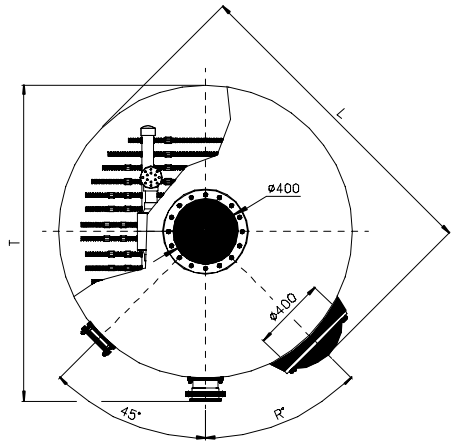

Oslo collector arms

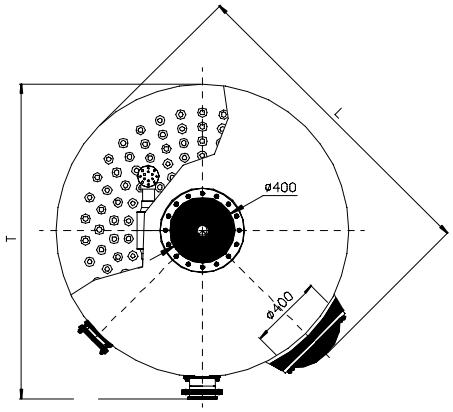

Oslo nozzle plate

Ø D (mm)	Filtration velocity (m³/h/m²)	Ø N (mm)		2,5 bar Code	4 bar Code	Flow rate m³/h	Filtration area (m²)	Volume (l)	A (mm)	B (mm)	C (mm)	F (mm)	H (mm)	L (mm)	Ø P (mm)	R	Ø S (mm)	T (mm)	W (mm)	Total operating weight (kg)
1050	30	75	DN65	**04611**	**05168**	25	0.86	1500	650	940	770	1550	2070	1240	750	55°	90	1220	325	2450
	40	90	DN80	**04612**	**05173**	34														
1200	30	75	DN65	**04613**	**05169**	33	1.13	1860	670	830	770	1550	2080	1390	940	45°	90	1380	350	3000
	40	110	DN100	**04650**	**05174**	45														
1400	30	90	DN80	**04615**	**07436**	46	1.54	2700	680	820	840	1570	2175	1590	1085	45°	90	1570	350	4300
	40	125	DN110	**04616**	**07437**	61														
1600	30	110	DN100	**04619**	**05170**	60	2.01	3620	780	800	870	1625	2310	1790	1230	45°	140	1780	400	5825
	40	140	DN125	**04651**	**05175**	80														
1800	30	125	DN110	**04623**	**07438**	76	2.54	4725	790	780	950	1625	2320	1990	1370	45°	140	2000	400	7300
	40	160	DN150	**04624**	**07439**	101														
2000	30	125	DN110	**04626**	**05171**	94	3.14	5800	790	840	950	1695	2460	2190	1550	45°	140	2200	400	9000
	40	160	DN150	**04652**	**05176**	125														
2200	30	140	DN125	**56935**	**57810**	114	3.80	7080	960	700	1100	1750	2580	2390	1860	45°	140	2400	450	12500
	40	160	DN150	**56936**	**57811**	152														
2350	30	140	DN125	**08693**	**05172**	130	4.34	8800	1065	700	1130	1850	2720	2550	1860	45°	140	2550	500	13750
	40	200	DN175	**08694**	**05177**	175														
2500	30	160	DN150	**08704**	**08712**	150	4.90	9850	1125	450	1080	1760	2750	2700	2000	45°	140	2750	500	14885
	40	225	DN200	**08706**	**08714**	200														
3000	30	200	DN175	**08708**	**08716**	212	7.07	15350	1150	600	1140	1870	2950	3200	2365	45°	140	3200	500	21615
	40	250	DN225	**08710**	**08718**	282														

Filtration bed 1,2 m y 1.5 m

BOBBIN WOUND FILTERS



DOES NOT INCLUDE VALVE MANIFOLD

THE Ø 3000 mm FILTERS WILL BE SHIPPED BY SPECIAL DELIVERY. ASK YOUR DEALER ABOUT ADDITIONAL COSTS.

Optional:
Standard American sizes

Olot filters

Features: **According to DIN 19605/19643 Standard**

Collector system:
Nozzle plate with 0.5 mm slots, working pressure 2.5 bar.

Fitted with:
- Pressure gauge panel
- Manual air vent and water purge
- Air wash connection flange
- Ø 400 mm manhole

Options:
- Positioning of water connections flanges, sightglasses and manhole covers are provided according to customer specification.
- Diameters of connections and purges depend on customer specifications
- For other variations such as height, chemical resistant internal coating, pressure rating, etc., please enquire.

Maximum pressure: 2 kg/cm²

Filtration bed 1.2 m

Diameter Ø mm	Filtration velocity m³/h/m²	Outlet Ø mm	Flow rate m³/h	Code	Standard Packaging	Standard Weight Kg	Standard Volume m³
1050	30	110	25	**07355**	1	265	2.95
1200	30	125	33	**07356**	1	345	3.86
1400	30	140	46	**07447**	1	380	5.22
1600	30	160	60	**07357**	1	420	7.09
1800	30	200	76	**07448**	1	470	9.09
2000	30	225	94	**07358**	1	540	11.25
2200	30	225	114	**56934**	1	-	15.34
2350	30	250	130	**07359**	1	825	16.20
2500	30	250	150	**19335**	1	940	24.40
2600	30	250	160	**23969**	1	1021	25.21
2800	30	250	185	**23970**	1	1135	29.50
3000	30	250	212	**19336**	1	1425	30.00

Filtration bed 1.5 m

Diameter Ø mm	Filtration velocity m³/h/m²	Outlet Ø mm	Flow rate m³/h	Code	Standard Packaging	Standard Weight Kg	Standard Volume m³
1050	30	110	25	**18227**	1	285	3.21
1200	30	125	33	**18228**	1	385	4.20
1400	30	140	46	**18229**	1	420	5.68
1600	30	160	60	**18230**	1	460	7.69
1800	30	200	76	**18231**	1	515	9.58
2000	30	225	94	**18232**	1	625	12.90
2350	30	250	130	**18233**	1	920	17.50
2500	30	250	150	**19337**	1	1010	25.87
2600	30	250	160	**23971**	1	1144	26.51
2800	30	250	185	**23972**	1	1264	30.63
3000	30	250	212	**19338**	1	1590	32.12

NB: Coding options according to table on page 526

BOBBIN WOUND FILTERS

Olot filters

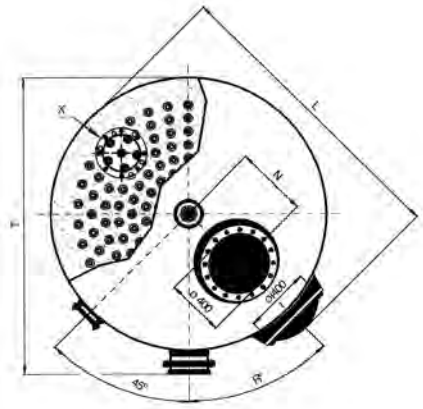

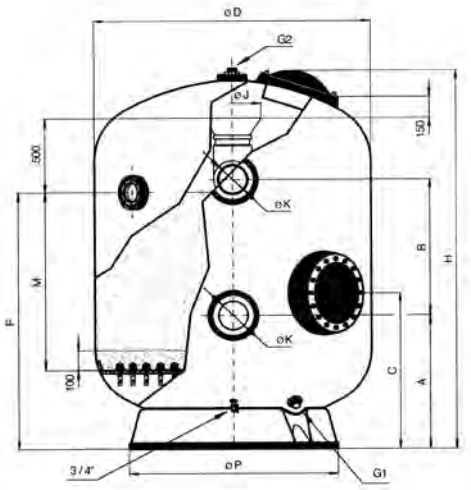

Ø D (mm)		**1050**	**1200**	**1400**	**1600**	**1800**	**2000**	**2200**	**2350**	**2500**	**2600**	**2800**	**3000**
Filtration velocity (m³/h/m²)		30	30	30	30	30	30	30	30	30	30	30	30
Ø K (mm)		110	125	140	160	200	225	225	250	250	250	250	250
		DN100	DN110	DN125	DN150	DN175	DN200	DN200	DN225	DN225	DN225	DN225	DN225
FILTER BED 1.2 m	**Code**	**07355**	**07356**	**07447**	**07357**	**07448**	**07358**	**56934**	**07359**	**19335**	**23969**	**23970**	**19336**
	H (mm)	2380	2400	2420	2520	2570	2660	2690	2800	2850	2920	3030	2900
	F (mm)	1615	1635	1645	1690	1740	1750	1820	1870	1870	1880	1920	1880
	Vol. (l)	1735	2175	3000	4350	5450	6650	7930	9575	11700	12800	15500	18000
	Total operating weight (kg)	2600	3325	4475	6250	7500	9625	11815	13600	15500	16650	19500	22500
FILTER BED 1.5 m	**Code**	**18227**	**18228**	**18229**	**18230**	**18231**	**18232**	**65547**	**18233**	**19337**	**23971**	**23972**	**19338**
	H (mm)	2680	2700	2720	2820	2870	2960	2990	3100	3150	3220	3330	3200
	F (mm)	1915	1935	1945	1990	2040	2050	2120	2170	2170	2180	2220	2180
	Vol (l)	1995	2745	3590	5150	6350	7650	9070	11255	12950	14100	16900	19700
	Total operating weight (kg)	3000	3900	5300	7150	8750	11250	13130	15800	17950	19400	22600	26250
Flow rate (m³/h)		25	33	46	60	76	94	114	130	150	160	185	212
Filtration area (m²)		0,86	1,13	1,54	2,01	2,54	3,14	3,80	4,34	4,90	5,31	6,16	7,07
Number of injectors		59	78	102	134	168	200	200	286	333	333	381	433
A (mm)		700	700	830	830	900	950	950	1050	1100	1160	1230	1140
B (mm)		1000	1000	900	950	920	760	750	680	600	600	650	600
C (mm)		830	840	840	870	950	950	1130	1130	1100	1200	1230	1220
L (mm)		1240	1390	1600	1810	1990	2194	2390	2550	2720	2800	3000	3220
Ø P (mm)		730	940	1080	1230	1390	1550	1860	1850	2050	2050	2200	2360
T (mm)		1220	1380	1570	1780	2000	2240	2450	2630	2750	2800	3000	3270
N (mm)		0	130	130	400	450	480	520	550	700	600	600	720
Ø X sightglass (mm)		125	250	250	250	250	250	250	250	250	250	250	250
° R		55°	45°	45°	45°	45°	45°	45°	45°	45°	45°	45°	45°
Ø J (mm)		380	380	380	380	380	380	380	600	600	600	600	600
Ø G1		2"	2"	2"	2"	75	75	75	75	75	90	110	140
Ø G2*		2"	2"	2"	2"	2"	2"	75	75	75	75	75	75

* In models Ø 1050 mm, 1200 mm and 1400 mm, this fitting is fitted on to the cover.

BOBBIN WOUND FILTERS

Construction features of the filter according to DIN 18820:

- (1) Chemical protective gel-coat barrier isoneopenliglical type CSS-UP3.
Superior hardness and resistance to the abrasion of sand and salt water. Complies with German standard KTW recommendations and certified by LVHT.
The optional vinylester layer for protection against ozone is of the CCS-PHAS class.
- (2) Polyester reinforced laminated resin with randomly orientated fibreglass filament GF-UP1type.
- Reinforced in MW areas under greater stress with an additional woven matting, alternating non-aligned (4) with aligned fibres (3).
- A set of radial bobbin layers (5) (7) on the cylindrical part and a set of polar layers (6) along the entire filter body with type GF-UP1 made with numeric control machinery. The most essential feature of these filters is their mechanical resistance which enables them to withstand greater internal pressures.
- All filters are submitted to a seasoning process at a temperature of 60°C.

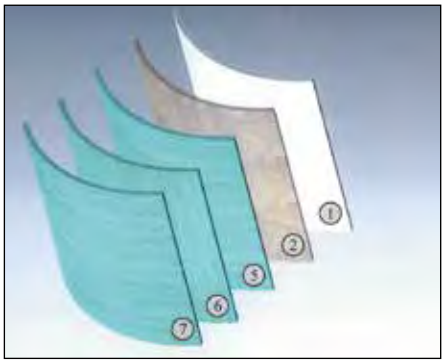

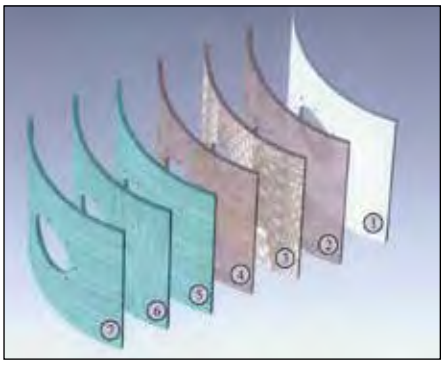

Ø 1050 mm and Ø 1200 mm Rodas filters



Ø 1050 mm
Ø 1200 mm

General features:
- 100% resistant to corrosion unlike conventional steel filters
- Excellent relation between filter weight and its mechanical characteristics
- Maximum operating temperature 50º C
- Comply with European standards for pressure vessels 97/23/CE included in section 3 of article 3
- Hydraulic pressure test 1.5 times the maximum admissible pressure
- Resistance and thickness calculations are based on norms BS-4994 and AD Merkblatt N1

Fitted with:
- Pressure gauge panel
- Manual air vent and water purge
- Ø 400 mm lateral manhole and Ø 140 mm top port

Characteristics of internal components:
- Internal components and pipe in PVC
- PP laterals with 0.3 slots
- Bolts, nuts and washers in AISI-316
- EPDM seals and gaskets.

Filter bed depth 0.6 m



Ø 1050 mm
Ø 1200 mm

BOBBIN WOUND FILTERS

Ø 1050 mm and Ø 1200 mm Rodas filters

Maximum pressure: 2.5 kg/cm²

Ø 1050 mm filters

Filter length (mm)	Filtration velocity m³/h/m²	Outlet Ø mm	Flow rate m³/h	Code	Standard Packaging	Standard Weight Kg	Standard Volume m³
1900	20	75	34	**05102**	1	230	2.95
	30	90	52	**05105**	1	230	2.95
	40	110	69	**05108**	1	230	2.95
2300	20	110	42	**11331**	1	280	3.57
	30	125	64	**11332**	1	280	3.57
	40	140	85	**11333**	1	280	3.57
2500	20	110	46	**24842**	1	305	3.88
	30	125	70	**24843**	1	305	3.88
	40	140	93	**24844**	1	305	3.88
2700	20	110	50	**11334**	1	330	4.20
	30	125	75	**11335**	1	330	4.20
	40	140	100	**11336**	1	330	4.20
3000	20	110	56	**22647**	1	370	4.67
	30	140	84	**22648**	1	370	4.67
	40	160	112	**22649**	1	370	4.67

Ø 1200 mm filters

Filter length (mm)	Filtration velocity m³/h/m²	Outlet Ø mm	Flow rate m³/h	Code	Standard Packaging	Standard Weight Kg	Standard Volume m³
1900	20	110	39	**22650**	1	270	3.08
	30	125	59	**22651**	1	270	3.08
	40	140	79	**22652**	1	270	3.08
2300	20	110	48	**22653**	1	330	3.73
	30	140	73	**22654**	1	330	3.73
	40	160	97	**22655**	1	330	3.73
2500	20	125	53	**24845**	1	360	4.05
	30	140	79	**24846**	1	360	4.05
	40	160	106	**24847**	1	360	4.05
2700	20	125	57	**22656**	1	390	4.38
	30	140	86	**22657**	1	390	4.38
	40	160	115	**22658**	1	390	4.38
3000	20	125	64	**22659**	1	435	4.86
	30	140	96	**22660**	1	435	4.86
	40	160	129	**22661**	1	435	4.86

See the sand, gravel and glass media loads on the next page

Filter bed depth 0.6 m



Ø 1050 mm
Ø 1200 mm

BOBBIN WOUND FILTERS

Ø 1050 mm and Ø 1200 mm Rodas filters

Maximum pressure: 4 kg/cm²

Ø 1050 mm filters

Filter length (mm)	Filtration velocity m³/h/m²	Outlet Ø mm	Flow rate m³/h	Code	Standard Packaging	Standard Weight Kg	Standard Volume m³
1900	20	75	34	**07124**	1	270	2.95
	30	90	52	**07125**	1	270	2.95
	40	110	69	**07126**	1	270	2.95
2300	20	110	42	**11321**	1	330	3.57
	30	125	64	**11322**	1	330	3.57
	40	140	85	**11323**	1	330	3.57
2500	20	110	46	**25016**	1	355	3.88
	30	125	70	**25017**	1	355	3.88
	40	140	93	**25018**	1	355	3.88
2700	20	110	50	**11326**	1	380	4.20
	30	125	75	**11327**	1	380	4.20
	40	140	100	**11328**	1	380	4.20
3000	20	110	56	**22683**	1	420	4.67
	30	140	84	**22684**	1	420	4.67
	40	160	112	**20895**	1	420	4.67

Ø 1200 mm filters

Filter length (mm)	Filtration velocity m³/h/m²	Outlet Ø mm	Flow rate m³/h	Code	Standard Packaging	Standard Weight Kg	Standard Volume m³
1900	20	110	39	**22685**	1	310	3.08
	30	125	59	**22686**	1	310	3.08
	40	140	79	**22687**	1	310	3.08
2300	20	110	48	**22688**	1	375	3.73
	30	140	73	**22689**	1	375	3.73
	40	160	97	**20897**	1	375	3.73
2500	20	125	53	**25019**	1	410	4.05
	30	140	79	**25020**	1	410	4.05
	40	160	106	**25021**	1	410	4.05
2700	20	125	57	**22690**	1	440	4.38
	30	140	86	**22691**	1	440	4.38
	40	160	115	**20898**	1	440	4.38
3000	20	125	64	**22692**	1	480	4.86
	30	140	96	**22693**	1	480	4.86
	40	160	129	**20899**	1	480	4.86

	Ø 1050 filters					Ø 1200 filters				
Filter length (mm)	**1900**	**2300**	**2500**	**2700**	**3000**	**1900**	**2300**	**2500**	**2700**	**3000**
Sand load (kg)	950	1250	1525	1800	2250	1100	1425	1750	2075	2325
Gravel load (kg)	350	475	575	700	775	425	550	700	825	925
Grade 1 glass load (57011) (kg)	673	893	1087	1294	1568	789	10022	1268	1501	1682
Grade 2 glass load (57012) (kg)	220	292	355	423	512	258	334	414	490	549
Grade 2 glass load (57012) (kg)	242	321	391	465	564	284	368	456	540	605

BOBBIN WOUND FILTERS

Ø 1050 mm and Ø 1200 mm Rodas filters

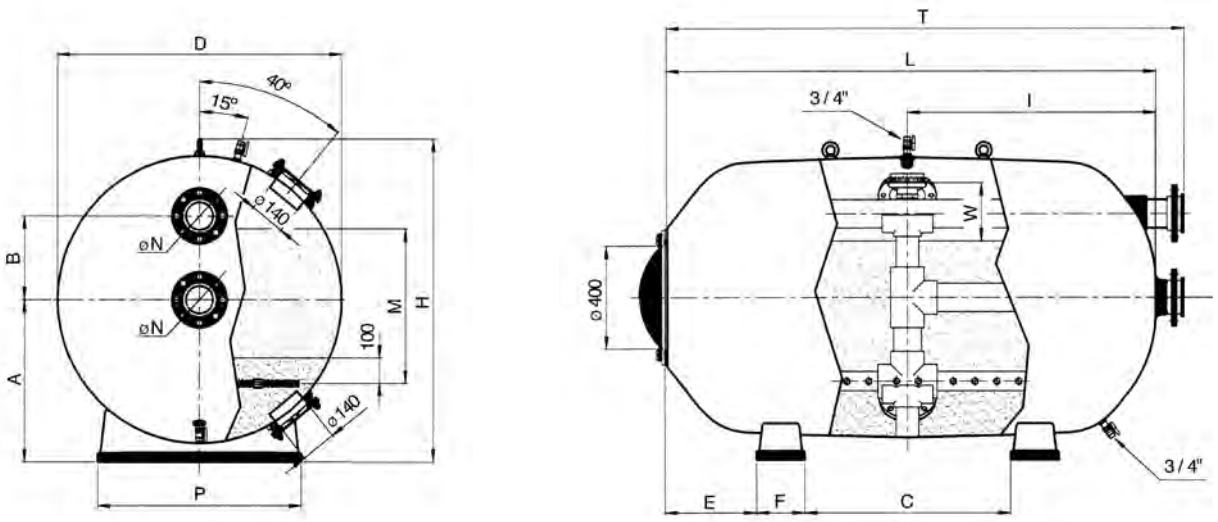

Length (mm)	Filtration velocity m³/h/m²	Ø N (mm)		2,5 bar Code	4 bar Code	Flow rate m³/h	Filtration area (m²)	Volume (l)	A (mm)	B (mm)	C (mm)	E (mm)	F (mm)	H (mm)	I (mm)	P (mm)	T (mm)	W (mm)	Total operating weight (kg)	Sand load Granulometry 1 - 1,2 mm	Sand load Granulometry 0,4 - 0,8 mm
Diameter 1050 mm - Filter bed depth 0.6 m.																					
1900	20	75	DN65	**05102**	**07124**	34	1,72	1480	630	325	760	380	190	1260	950	800	2160	170	2530	350	950
	30	90	DN80	**05105**	**07125**	52															
	40	110	DN100	**05108**	**07126**	69															
2300	20	110	DN100	**11331**	**11321**	42	2,12	1820	630	325	1000	460	190	1260	1150	800	2560	170	3100	475	1250
	30	125	DN110	**11332**	**11322**	64															
	40	140	DN125	**11333**	**11323**	85															
2500	20	110	DN100	**24842**	**25016**	46	2,32	2000	630	325	1120	500	190	1260	1250	800	2760	170	3380	575	1525
	30	125	DN110	**24843**	**25017**	70															
	40	140	DN125	**24844**	**25018**	93															
2700	20	110	DN100	**11334**	**11326**	50	2,51	2170	630	325	1240	540	190	1260	1350	800	2960	170	3670	700	1800
	30	125	DN110	**11335**	**11327**	75															
	40	140	DN125	**11336**	**11328**	100															
3000	20	110	DN100	**22647**	**22683**	56	2,81	2430	630	325	1420	600	190	1260	1500	800	3260	170	4100	775	20250
	30	140	DN125	**22648**	**22684**	84															
	40	160	DN150	**22649**	**20895**	112															
Diameter 1200 mm - Filter bed depth 0.6 m.																					
1900	20	75	DN100	**22650**	**22685**	39	1,96	1900	725	325	760	380	200	1390	950	900	2130	225	3220	425	1100
	30	90	DN110	**22651**	**22686**	59															
	40	110	DN125	**22652**	**22687**	79															
2300	20	110	DN100	**22653**	**22688**	48	2,42	2350	725	325	1000	460	200	1390	1150	900	2530	225	3960	550	1425
	30	125	DN125	**22654**	**22689**	73															
	40	140	DN150	**22655**	**20897**	97															
2500	20	110	DN110	**24845**	**25019**	53	2,65	2580	725	325	1120	500	200	1390	1250	900	2750	225	4320	700	1750
	30	125	DN125	**24846**	**25020**	79															
	40	140	DN150	**24847**	**25021**	106															
2700	20	110	DN110	**22656**	**22690**	57	2,87	2800	725	325	1240	540	200	1390	1350	900	2950	225	4690	825	2075
	30	125	DN125	**22657**	**22691**	86															
	40	140	DN150	**22658**	**20898**	115															
3000	20	110	DN110	**22659**	**22692**	64	3,21	3140	725	325	1420	600	200	1390	1500	900	3250	225	5240	925	2325
	30	140	DN125	**22660**	**22693**	96															
	40	160	DN150	**22661**	**20899**	129															

MEDIA RECOMMENDATIONS - Sand = 1.4 Kg/dm³ - Gravel = 1.5 Kg/dm³

Filtration bed 0.8 and 1 m



DOES NOT INCLUDE VALVE MANIFOLD

Ø 1400 mm
Ø 1600 mm
Ø 1800 mm

Optional:
Standard American sizes

BOBBIN WOUND FILTERS

Ø 1400 mm and Ø 1600 mm Rodas filters

General features:
- 100% resistant to corrosion unlike conventional steel filters
- Maximum operating temperature 50º C
- Comply with European standards for pressure vessels 97/23/CE included in section 3 of article 3
- Hydraulic pressure test 1.5 times the maximum admissible pressure

Fitted with:
- Pressure gauge panel
- Manual air vent and water purge
- Ø 400 mm lateral manhole

Characteristics of internal components:
- Internal components and pipe in PVC
- PP laterals with 0.3 slots
- Bolts, nuts and washers in AISI-316
- EPDM seals and gaskets.

Maximum pressure: 2.5 kg/cm².

Filters Ø 1400 mm - Filtration bed 0.8 m

Filter length (mm)	Filtration velocity m³/h/m²	Outlet Ø mm	Flow rate m³/h	Code	Standard Packaging	Standard Weight Kg	Standard Volume m³
1900	20	110	45	**24848**	1	340	4.84
	30	125	67	**24849**	1	340	4.84
	40	140	89	**24850**	1	340	4.84
2500	20	110	60	**24854**	1	435	6.23
	30	140	91	**24855**	1	435	6.23
	40	160	121	**24856**	1	435	6.23
3000	20	125	73	**24860**	1	530	7.44
	30	160	110	**24861**	1	530	7.44
	40	200	147	**24862**	1	530	7.44

Filters Ø 1600 mm - Filtration bed 1 m

Filter length (mm)	Filtration velocity m³/h/m²	Outlet Ø mm	Flow rate m³/h	Code	Standard Packaging	Standard Weight Kg	Standard Volume m³
1900	20	110	49	**22662**	1	400	5.49
	30	140	74	**22663**	1	400	5.49
	40	160	99	**22664**	1	400	5.49
2500	20	140	67	**24866**	1	520	7.18
	30	160	101	**24867**	1	520	7.18
	40	200	134	**24868**	1	520	7.18
3000	20	140	82	**22671**	1	620	8.60
	30	160	123	**22672**	1	620	8.60
	40	200	164	**22673**	1	620	8.60

See the sand, gravel and glass loads on page 549

Filtration bed 0.8 and 1 m



DOES NOT INCLUDE VALVE MANIFOLD

Ø 1400 mm
Ø 1600 mm
Ø 1800 mm

Optional:
Standard American sizes

BOBBIN WOUND FILTERS

Ø 1400 mm, Ø 1600 mm and Ø 1800 mm Rodas filters

Maximum pressure: 2.5 kg/cm².

Filters Ø 1800 mm - Filtration bed 1 m

Filter length (mm)	Filtration velocity m³/h/m²	Outlet Ø mm	Flow rate m³/h	Code	Standard Packaging	Standard Weight Kg	Standard Volume m³
2500	20	125	75	**24875**	1	585	10.40
	30	160	112	**24876**	1	585	10.40
	40	200	150	**24877**	1	585	10.40
3000	20	140	92	**24881**	1	700	12.25
	30	160	137	**24882**	1	700	12.25
	40	200	183	**24883**	1	700	12.25
3500	20	140	108	**24887**	1	875	14.20
	30	200	162	**24888**	1	875	14.20
	40	225	216	**24889**	1	875	14.20
4000	20	160	125	**24893**	1	930	16.00
	30	200	187	**24894**	1	930	16.00
	40	225	250	**24895**	1	930	16.00

Maximum pressure: 4 kg/cm²

Filters Ø 1400 mm - Filtration bed 0.8 m

Filter length (mm)	Filtration velocity m³/h/m²	Outlet Ø mm	Flow rate m³/h	Code	Standard Packaging	Standard Weight Kg	Standard Volume m³
1900	20	110	45	**25022**	1	385	4.84
	30	125	67	**25023**	1	385	4.84
	40	140	89	**25024**	1	385	4.84
2500	20	110	60	**25028**	1	485	6.23
	30	140	91	**25029**	1	485	6.23
	40	160	121	**25030**	1	485	6.23
3000	20	125	73	**25034**	1	585	7.44
	30	160	110	**25035**	1	585	7.44
	40	200	147	**25036**	1	585	7.44

See the sand, gravel and glass media loads on the next page

Filtration bed 0.8 and 1 m



DOES NOT INCLUDE VALVE MANIFOLD

Ø 1400 mm
Ø 1600 mm
Ø 1800 mm

Optional:
Standard American sizes

BOBBIN WOUND FILTERS

Ø 1400 mm, Ø 1600 mm and Ø 1800 mm Rodas filters

Maximum pressure: 4 kg/cm²

Filters Ø 1600 mm - Filtration bed 1 m

Filter length (mm)	Filtration velocity m³/h/m²	Outlet Ø mm	Flow rate m³/h	Code	Standard Packaging	Standard Weight Kg	Standard Volume m³
1900	20	110	49	**22694**	1	450	5.49
	30	140	74	**22695**	1	450	5.49
	40	160	99	**20900**	1	450	5.49
2500	20	140	67	**25040**	1	570	7.18
	30	160	101	**25041**	1	570	7.18
	40	200	134	**25042**	1	570	7.18
3000	20	140	82	**22700**	1	685	8.60
	30	160	123	**22701**	1	685	8.60
	40	200	164	**20903**	1	685	8.60

Filters Ø 1800 mm - Filtration bed 1 m

Filter length (mm)	Filtration velocity m³/h/m²	Outlet Ø mm	Flow rate m³/h	Code	Standard Packaging	Standard Weight Kg	Standard Volume m³
2500	20	125	75	**25049**	1	680	10.40
	30	160	112	**25050**	1	680	10.40
	40	200	150	**25051**	1	680	10.40
3000	20	140	92	**25055**	1	805	12.25
	30	160	137	**25056**	1	805	12.25
	40	200	183	**25057**	1	805	12.25
3500	20	140	108	**25061**	1	930	14.20
	30	200	162	**25062**	1	930	14.20
	40	225	216	**25063**	1	930	14.20
4000	20	160	125	**25067**	1	1055	16.00
	30	200	187	**25068**	1	1055	16.00
	40	225	250	**25069**	1	1055	16.00

	Ø 1400 filters			Ø 1600 filters			Ø 1800 filters			
Filter length (mm)	**1900**	**2500**	**3000**	**1900**	**2500**	**3000**	**2500**	**3000**	**3500**	**4000**
Sand load (kg)	2100	2825	3450	2850	3875	4750	4850	5925	7000	8075
Gravel load (kg)	575	800	1000	600	850	1050	975	1225	1475	1700
Grade 1 glass load (57011) (kg)	1389	1882	2310	1796	2458	3018	3033	3722	4411	5087
Grade 2 glass load (57012) (kg)	454	615	754	586	803	986	991	1216	1441	1662
Grade 2 glass load (57012) (kg)	500	677	831	646	884	1085	1091	1338	1586	1830

BOBBIN WOUND FILTERS

Ø 1400 mm, Ø 1600 mm and Ø 1800 mm Rodas filters

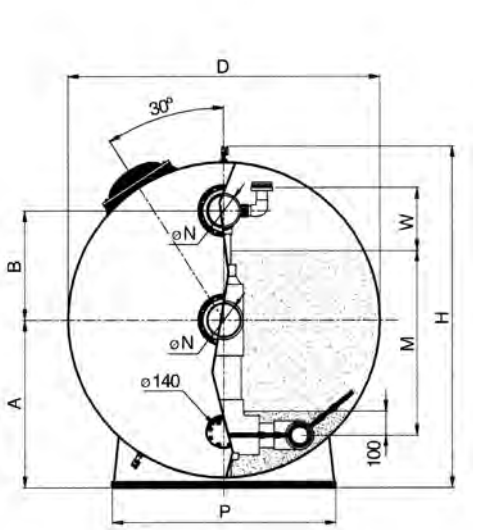

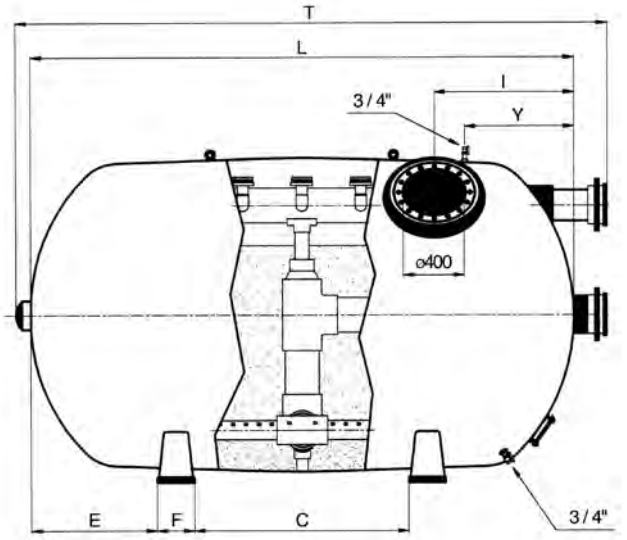

Length (mm)	Filtration velocity m³/h/m²	Ø N (mm)		2,5 bar Code	4 bar Code	Flow rate m³/h	Filtration area (m²)	Volume (l)	A (mm)	B (mm)	C (mm)	E (mm)	F (mm)	H (mm)	I (mm)	P (mm)	T (mm)	W (mm)	Y (mm)	Total operating weight (kg)	Sand load Granulomety 1 - 1.2 mm	Sand load Granulomety 0.4 - 0.8 mm
Diameter 1400 mm - Filter bed depth 0.8–1.2 m.																						
1900	20	110	DN100	**24848**	**25022**	45	2.23	2530	810	390	720	380	210	1600	820	1080	2160	220	1380	4250	575	2100
	30	125	DN110	**24849**	**25023**	67																
	40	140	DN125	**24850**	**25024**	89																
2500	20	110	DN100	**24854**	**25028**	60	3.02	3460	810	390	1080	500	210	1600	820	1080	2780	220	1380	5740	800	2825
	30	140	DN125	**24855**	**25029**	91																
	40	160	DN150	**24856**	**25030**	121																
3000	20	125	DN110	**24860**	**25034**	73	3.67	4230	810	390	1380	600	210	1600	820	1080	3320	220	1380	6990	1000	3450
	30	160	DN150	**24861**	**25035**	110																
	40	200	DN175	**24862**	**25036**	147																
Diameter 1600 mm - Filter bed depth 1–1.2 m,																						
1900	20	110	DN100	**22662**	**22694**	49	2.47	3220	925	475	470	475	240	1830	800	1230	2220	250	1380	5420	600	2850
	30	140	DN125	**22663**	**22695**	74																
	40	160	DN150	**22664**	**20900**	99																
2500	20	140	DN125	**24866**	**25040**	67	3.36	4430	925	475	1020	500	240	1830	800	1230	2820	250	1380	7400	850	3875
	30	160	DN150	**24867**	**25041**	101																
	40	200	DN175	**24868**	**25042**	134																
3000	20	140	DN125	**22671**	**22700**	82	4.1	5430	925	475	1320	600	240	1830	800	1230	3360	250	1380	9020	1050	4750
	30	160	DN150	**22672**	**22701**	123																
	40	200	DN175	**22673**	**20903**	164																
Diameter 1800 mm - Filter bed depth 1–1.2 m,																						
2500	20	125	DN110	**24875**	**25049**	75	3.74	5530	1040	550	1020	380	270	2050	870	1380	2820	350	1250	9170	975	4850
	30	160	DN150	**24876**	**25050**	112																
	40	200	DN175	**24877**	**25051**	150																
3000	20	140	DN125	**24881**	**25055**	92	4.58	6800	1040	550	1320	460	270	2050	870	1380	3320	350	1500	11230	1225	5925
	30	160	DN150	**24882**	**25056**	137																
	40	200	DN175	**24883**	**25057**	183																
3500	20	140	DN125	**24887**	**25061**	108	5.41	8070	1040	550	1620	500	270	2050	870	1380	3850	350	1750	13290	1475	7000
	30	200	DN175	**24888**	**25062**	162																
	40	225	DN200	**24889**	**25063**	216																
4000	20	160	DN150	**24893**	**25067**	125	6.25	9340	1040	550	1920	540	270	2050	870	1380	4350	350	2000	15350	1700	8075
	30	200	DN175	**24894**	**25068**	187																
	40	225	DN200	**24895**	**25069**	250																

MEDIA RECOMMENDATIONS - Sand = 1.4 Kg/dm³ - Gravel = 1.5 Kg/dm³

Filtration bed
1 and 1.2 m



DOES NOT INCLUDE
VALVE MANIFOLD

Ø 2000 mm
Ø 2350 mm

Optional:
Standard American sizes

BOBBIN WOUND FILTERS

Ø 2000 mm and Ø 2350 mm Rodas filters

General features:
- 100% resistant to corrosion unlike conventional steel filters
- Maximum operating temperature 50º C
- Comply with European standards for pressure vessels 97/23/CE included in section 3 of article 3
- Hydraulic pressure test 1.5 times the maximum admissible pressure

Fitted with:
- Pressure gauge panel
- Manual air vent and water purge
- Ø 400 mm lateral manhole

Characteristics of internal components:
- Internal components and pipe in PVC
- PP laterals with 0.3 slots
- Bolts, nuts and washers in AISI-316
- EPDM seals and gaskets.

Maximum pressure: 2.5 kg/cm².

Filters Ø 2000 mm

Filter length (mm)	Filtration velocity m³/h/m²	Outlet Ø mm	Flow rate m³/h	Code	Standard Packaging	Standard Weight Kg	Standard Volume m³
2500	20	140	87	**05103**	1	650	13.20
	30	160	130	**05106**	1	650	13.20
	40	200	174	**05109**	1	650	13.20
3000	20	140	106	**24899**	1	775	15.65
	30	160	159	**24900**	1	775	15.65
	40	200	212	**24901**	1	775	15.65
3500	20	160	125	**05104**	1	900	18.10
	30	200	187	**05107**	1	900	18.10
	40	225	250	**05110**	1	900	18.10
4000	20	160	144	**24908**	1	1025	20.55
	30	200	216	**24909**	1	1025	20.55
	40	225	288	**24910**	1	1025	20.55
4500	20	200	163	**24914**	1	1150	23.00
	30	225	245	**24915**	1	1150	23.00
	40	250	326	**24916**	1	1150	23.00

See the sand, gravel and glass loads on page 553

Filtration bed 1 and 1.2 m



DOES NOT INCLUDE VALVE MANIFOLD

Ø 2000 mm
Ø 2350 mm

Optional:
Standard American sizes

BOBBIN WOUND FILTERS

Ø 2000 mm and Ø 2350 mm Rodas filters

Maximum pressure: 2.5 kg/cm². **Filters Ø 2350 mm**

Filter length (mm)	Filtration velocity m³/h/m²	Outlet Ø mm	Flow rate m³/h	Code	Standard Packaging	Standard Weight Kg	Standard Volume m³
3000	20	160	119	**24917**	1	1350	20.25
	30	200	178	**24918**	1	1350	20.25
	40	225	238	**24919**	1	1350	20.25
3500	20	160	141	**17120**	1	1500	23.00
	30	200	212	**16696**	1	1500	23.00
	40	225	282	**17121**	1	1500	23.00
4000	20	200	163	**24926**	1	1650	25.75
	30	225	245	**24927**	1	1650	25.75
	40	250	327	**24928**	1	1650	25.75
4500	20	200	186	**22674**	1	1800	28.50
	30	225	279	**22675**	1	1800	28.50
	40	250	371	**22676**	1	1800	28.50
5000	20	200	208	**24935**	1	1950	31.25
	30	250	312	**24936**	1	1950	31.25
	40	350	416	**24937**	1	1950	31.25

Maximum pressure: 4 kg/cm² **Filters Ø 2000 mm**

Filter length (mm)	Filtration velocity m³/h/m²	Outlet Ø mm	Flow rate m³/h	Code	Standard Packaging	Standard Weight Kg	Standard Volume m³
2500	20	140	87	**07127**	1	795	13.20
	30	160	130	**07128**	1	795	13.20
	40	200	174	**07129**	1	795	13.20
3000	20	140	106	**25073**	1	945	15.65
	30	160	159	**25074**	1	945	15.65
	40	200	212	**25075**	1	945	15.65
3500	20	160	125	**07130**	1	1100	18.10
	30	200	187	**07131**	1	1100	18.10
	40	225	250	**07132**	1	1100	18.10
4000	20	160	144	**25082**	1	1260	20.55
	30	200	216	**25083**	1	1260	20.55
	40	225	288	**25084**	1	1260	20.55
4500	20	200	163	**25088**	1	1420	23.00
	30	225	245	**25089**	1	1420	23.00
	40	250	326	**25090**	1	1420	23.00

See the sand, gravel and glass media loads on the next page

Filtration bed 1 and 1.2 m



DOES NOT INCLUDE VALVE MANIFOLD

Ø 2000 mm Ø 2350 mm

Optional: Standard American sizes

BOBBIN WOUND FILTERS

Ø 2000 mm and Ø 2350 mm Rodas filters

Maximum pressure: 4 kg/cm²

Filters Ø 2350 mm

Filter length (mm)	Filtration velocity m³/h/m²	Outlet Ø mm	Flow rate m³/h	Code	Standard Packaging	Standard Weight Kg	Standard Volume m³
3000	20	160	119	**25091**	1	1150	20.25
	30	200	178	**25092**	1	1150	20.25
	40	225	238	**25093**	1	1150	20.25
3500	20	160	141	**22702**	1	1300	23.00
	30	200	212	**22703**	1	1300	23.00
	40	225	282	**22704**	1	1300	23.00
4000	20	200	163	**25100**	1	1450	25.75
	30	225	245	**25101**	1	1450	25.75
	40	250	327	**25102**	1	1450	25.75
4500	20	200	186	**22705**	1	1600	28.50
	30	225	279	**22706**	1	1600	28.50
	40	250	371	**22707**	1	1600	28.50
5000	20	200	208	**25109**	1	1750	31.25
	30	250	312	**25110**	1	1750	31.25
	40	350	416	**25111**	1	1750	31.25

	Ø 2000 filters					Ø 2350 filters				
Filter length (mm)	**2500**	**3000**	**3500**	**4000**	**4500**	**3000**	**3500**	**4000**	**4500**	**5000**
Sand load (kg)	6575	8025	9475	10925	12375	9300	11050	12800	14525	16250
Gravel load (kg)	1050	1300	1550	1800	2075	2575	3125	3650	4200	4750
Grade 1 glass load (57011) (kg)	3976	4862	5748	6634	7533	6166	7359	8540	9720	10900
Grade 2 glass load (57012) (kg)	1299	1588	1877	2167	2460	2014	2404	2789	3175	3560
Grade 3 glass load (57013) (kg)	1430	1748	2067	2386	2709	2218	2647	3071	3495	3920

BOBBIN WOUND FILTERS

Ø 2000 mm and Ø 2350 mm Rodas filters

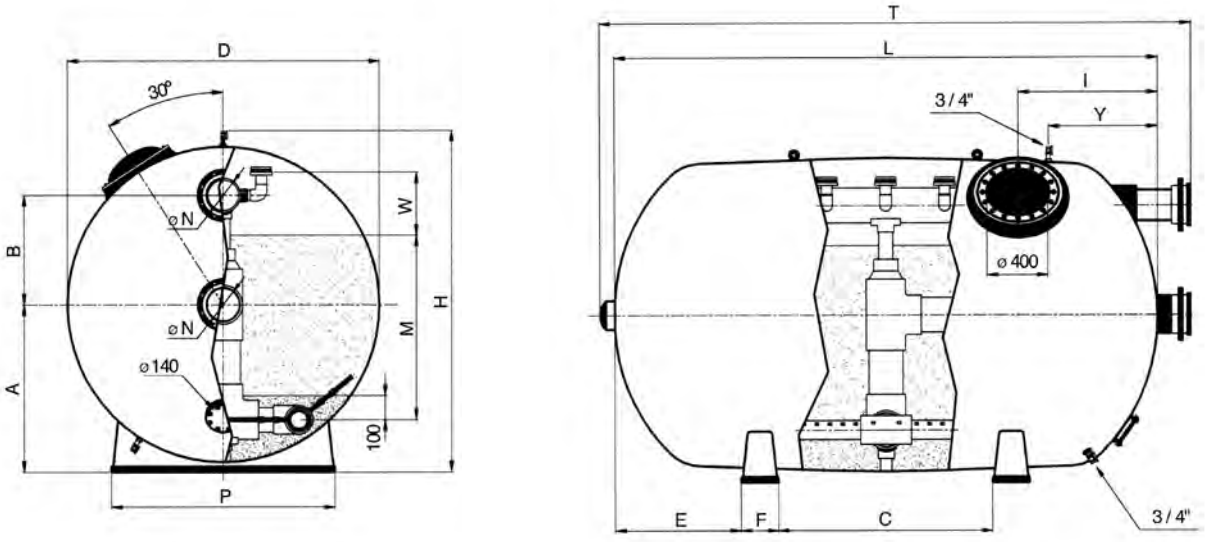

Length (mm)	Filtration velocity m³/h/m²	Ø N (mm)		2.5 bar Code	4 bar Code	Flow rate m³/h	Filtration area (m²)	Volume (l)	A (mm)	B (mm)	* C (mm)	E (mm)	F (mm)	H (mm)	I (mm)	P (mm)	T (mm)	W (mm)	Y (mm)	Total operating weight (kg)	Sand load Granulometry 1 - 1.2 mm	Sand load Granulometry 0.4 - 0.8 mm
Diameter 2000 mm - Filter bed depth 1–1.2 m																						
2500	20	140	DN125	**05103**	**07127**	87	4.34	6900	1090	710	500	500	500	2220	925	1470	2820	410	1250	11300	1050 M=1.2 m	6575 M=1,2 m
	30	160	DN150	**05106**	**07128**	130																
	40	200	DN175	**05109**	**07129**	174																
3000	20	140	DN125	**24899**	**25073**	106	5.3	8470	1090	710	810	600	500	2220	925	1470	3320	410	1500	13790	1300 M=1,2 m	8025 M=1,2 m
	30	160	DN150	**24900**	**25074**	159																
	40	200	DN175	**24901**	**25075**	212																
3500	20	160	DN150	**05104**	**07130**	125	6.25	10040	1090	710	1070	725	500	2220	925	1470	3850	410	1750	16280	1550 M=1.2 m	9475 M=1,2 m
	30	200	DN175	**05107**	**07131**	187																
	40	225	DN200	**05110**	**07132**	250																
4000	20	160	DN150	**24908**	**25082**	144	7.21	11600	1090	710	650	600	500	2220	925	1470	4350	410	2000	18780	1800 M=1.2 m	10925 M=1,2 m
	30	200	DN175	**24909**	**25083**	216																
	40	225	DN200	**24910**	**25084**	288																
4500	20	200	DN175	**24914**	**25088**	163	8.16	13180	1090	710	795	600	500	2220	925	1470	4880	410	2250	21380	2075 M=1,2 m	12375 M=1,2 m
	30	225	DN200	**24915**	**25089**	245																
	40	250	DN225	**24916**	**25090**	326																
Diameter 2350 mm - Filter bed depth 1–1.2 m																						
3000	20	160	DN150	**24917**	**25091**	119	5.94	11130	1270	710	800	600	500	2560	925	1740	3350	500	1500	18300	2575 M=1,2 m	9300 M=1,2 m
	30	200	DN175	**24918**	**25092**	178																
	40	225	DN200	**24919**	**25093**	238																
3500	20	160	DN150	**17120**	**22702**	141	7.06	13300	1270	710	1100	700	500	2560	925	1740	3850	500	1750	21790	3125 M=1,2 m	11050 M=1,2 m
	30	200	DN175	**16696**	**22703**	212																
	40	225	DN200	**17121**	**22704**	282																
4000	20	200	DN175	**24926**	**25100**	163	8.17	15470	1270	710	650	600	500	2560	925	1740	4380	500	2000	25280	3650 M=1,2 m	12800 M=1,2 m
	30	225	DN200	**24927**	**25101**	245																
	40	250	DN225	**24928**	**25102**	327																
4500	20	200	DN175	**22674**	**22705**	186	9.28	17640	1270	710	820	700	500	2560	925	1740	4880	500	2250	28880	4200 M=1,2 m	14525 M=1,2 m
	30	225	DN200	**22675**	**22706**	279																
	40	250	DN225	**22676**	**22707**	371																
5000	20	200	DN175	**24935**	**25109**	208	10.4	19800	1270	710	600	600	500	2560	925	1740	5440	500	2500	32380	4750 M=1,2 m	16250 M=1,2 m
	30	250	DN225	**24936**	**25110**	312																
	40	315	DN250	**24937**	**25111**	416																

MEDIA RECOMMENDATIONS : Hydroanthracite = 0.8 Kg/dm³ - Sand = 1.4 Kg/dm³ - Gravel = 1.5 Kg/dm³

*With lengths (dimension L) of 4000 mm or more, an additional central support is provided.

Filtration bed 1 and 1.2 m



DOES NOT INCLUDE VALVE MANIFOLD

Ø 2500 mm

Optional:
Standard American sizes

LARGE FILTERS OF MORE THAN 3000 mm WILL BE SHIPPED BY SPECIAL DELIVERY. ASK YOUR DEALER ABOUT ADDITIONAL COSTS. ABOUT ADDITIONAL COSTS.

BOBBIN WOUND FILTERS

Ø 2500 mm Rodas filters

General features:
- 100% resistant to corrosion unlike conventional steel filters
- Maximum operating temperature 50º C
- Comply with European standards for pressure vessels 97/23/CE included in section 3 of article 3
- Hydraulic pressure test 1.5 times the maximum admissible pressure

Fitted with:
- Pressure gauge panel
- Manual air vent and water purge
- Ø 400 mm lateral manhole

Characteristics of internal components:
- Internal components and pipe in PVC
- PP laterals with 0.3 slots
- Bolts, nuts and washers in AISI-316
- EPDM seals and gaskets.

Maximum pressure: 2.5 kg/cm². **Filters Ø 2500 mm**

Filter length (mm)	Filtration velocity m³/h/m²	Outlet Ø mm	Flow rate m³/h	Code	Standard Packaging	Standard Weight Kg	Standard Volume m³
3500	20	160	149	**24938**	1	1285	28.00
	30	200	223	**24939**	1	1285	28.00
	40	225	297	**24940**	1	1285	28.00
4000	20	200	172	**22677**	1	1450	31.80
	30	225	258	**22678**	1	1450	31.80
	40	250	345	**22679**	1	1450	31.80
4500	20	200	196	**24947**	1	1615	35.55
	30	250	294	**24948**	1	1615	35.55
	40	315	392	**24949**	1	1615	35.55
5000	20	200	220	**22680**	1	1780	39.30
	30	250	329	**22681**	1	1780	39.30
	40	315	439	**22682**	1	1780	39.30

Maximum pressure: 4 kg/cm² **Filters Ø 2500 mm**

Filter length (mm)	Filtration velocity m³/h/m²	Outlet Ø mm	Flow rate m³/h	Code	Standard Packaging	Standard Weight Kg	Standard Volume m³
3500	20	160	149	**25112**	1	1505	28.00
	30	200	223	**25113**	1	1505	28.00
	40	225	297	**25114**	1	1505	28.00
4000	20	200	172	**22708**	1	1670	31.80
	30	225	258	**22709**	1	1670	31.80
	40	250	345	**22710**	1	1670	31.80
4500	20	200	196	**25121**	1	1835	35.55
	30	250	294	**25122**	1	1835	35.55
	40	315	392	**25123**	1	1835	35.55
5000	20	200	220	**22711**	1	2000	39.30
	30	250	329	**22712**	1	2000	39.30
	40	315	439	**22713**	1	2000	39.30

BOBBIN WOUND FILTERS

Ø 2500 mm Rodas filters

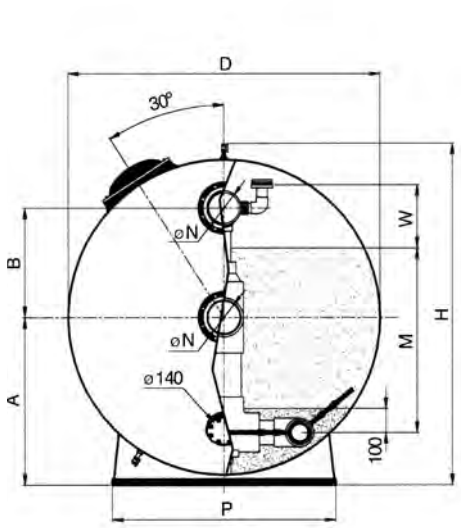

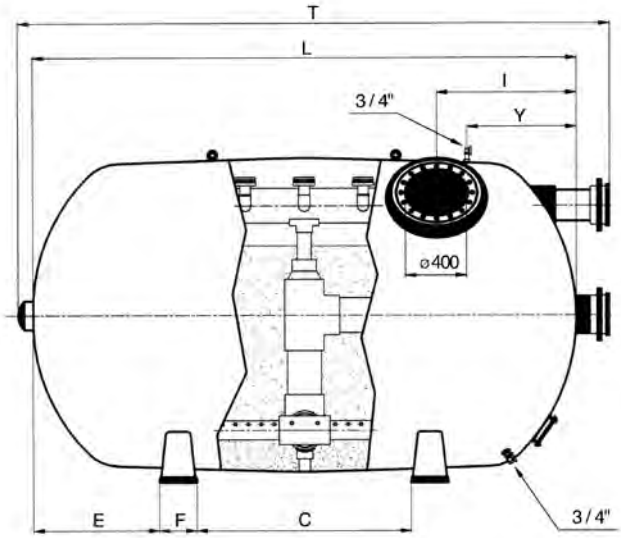

Length (mm)	Filtering velocity (m³/h/m²)	Ø N (mm)		2,5 bar	4 bar	Flow rate m³/h	Filtration area (m²)	Volume (l)	A (mm)	B (mm)	* C (mm)	E (mm)	F (mm)	H (mm)	I (mm)	P (mm)	T (mm)	W (mm)	Y (mm)	Total operating weight (kg)	Sand load Granulometry	
				Code	Code																1 - 1.2 mm	0.4 - 0.8 mm
Diameter 2500 mm - Filter bed depth 1–1.2 m																						
3500	20	160	DN150	**24938**	**25112**	149	7.34	14920	1360	710	960	770	500	2710	1300	1850	3850	500	1750	24320	3175 M=1,2 m	11675 M=1,2 m
	30	200	DN175	**24939**	**25113**	223																
	40	225	DN200	**24940**	**25114**	297																
4000	20	200	DN175	**22677**	**22708**	172	8.62	17380	1360	710	500	750	500	2710	1300	1850	4380	500	2000	28250	3725 M=1,2 m	13500 M=1,2 m
	30	225	DN200	**22678**	**22709**	258																
	40	250	DN225	**22679**	**22710**	345																
4500	20	200	DN175	**24947**	**25121**	196	9.80	19830	1360	710	750	750	500	2710	1300	1850	4940	500	2250	32300	4300 M=1,2 m	15350 M=1.2 m
	30	250	DN225	**24948**	**25122**	294																
	40	315	DN250	**24949**	**25123**	392																
5000	20	200	DN175	**22680**	**22711**	220	10.98	22300	1360	710	500	750	500	2710	1300	1850	5440	500	2500	36230	4850 M=1,2 m	17200 M=1,2 m
	30	250	DN225	**22681**	**22712**	329																
	40	315	DN250	**22682**	**22713**	439																

MEDIA RECOMMENDATIONS - SAND = 1.4 KG/DM³ - GRAVEL = 1.5 KG/DM³

*With lengths (dimension L) of 4000 mm or more, an additional central support is provided.

	Ø 2500 filters			
Filter length (mm)	**3500**	**4000**	**4500**	**5000**
Sand load (kg)	11675	13500	15350	17200
Gravel load (kg)	3175	3725	4300	4850
Grade 1 glass load (57011) (kg)	7713	8945	10203	11448
Grade 2 glass load (57012) (kg)	2519	2922	3333	3739
Grade 3 glass load (57013) (kg)	2774	3217	3669	4117

VALVE MANIFOLDS

Valve manifold - Coding



All manifolds are supplied disassembled
All manfiolds have to be supported correctly
(See brackets on page 560)

Manual or automatically driven valve manifolds made of PVC (PN-10) with flanges for connection to filters as per DIN-2501 standard.

PVC butterfly valves and ball valves.

Automatic valve manifolds, driven either by electric power or pneumatically, for carrying out filtration, backwashing, rinsing and shut down of the filters. Fitted with two valves without safety blocks (electric) or dual action (pneumatic), and the remaining valves with safety blocks (electric) or spring return (pneumatic), to avoid accidentally emptying a pool.

* Ask Cepex Catalogue for automatic ball valves and butterfly valves codes.



Assembly with control box
See page 559



A: Electric driven without safety block
B: Pneumatic driven spring return

In order to facilitate sales and prices, a new code system for filter manifolds has been introduced to Catalogues. It consists in assigning a code to each model of manifold as shown in these tables. There is a total of 60 codes and subsequently, in order to determine exactly which filter is being referred to, a system of variations is used, given that the retail price does not vary.
To work out the variation the type and diameter of the filter must be identified, as the output diameters match the manifold code.
For manifolds with more than one filter please consult.

Table showing filter type

BB	Berlin bobbin wound filter - 0.6 m filter bed (FB)
BS	Praga bobbin wound filter
BA	Oslo bobbin wound filter
OL	Olot bobbin wound filter 1.2 m and 1.5 m filter bed
AM	Ampuria bobbin wound filter 1.2 m and 1.5 m filter bed
HZ	Rodas bobbin wound filter
EU	Europa laminated filter
VP	Vesubio laminated filter - 0.6 m filter bed
VI	Vic bobbin wound filter
VO	Vesubio laminated filter - 1 m filter bed

Table showing filter diameter

10	1050
12	1200
14	1400
16	1600
18	1800
20	2000
23	2350
25	2500
26	2600
28	2800
30	3000

Examples:	**Code**	**Var.**	**Mod.**
Manual manifold 4 Val. for Praga filter D.2000-140	1.- **00767**	BS	20
Electric manifold 5 Val. for Praga filter D.1800-125	2.- **00785E**	BS	18
Manual manifold 5 Val. for Olot filter D.1200-125	3.- **00785**	OL	12
Pneumatic manifold 5 Val. for Vic filter D.2350-160	4.- **09177N**	VI	23

VALVE MANIFOLDS

Optional features for manifolds: Standard American sizes

Valve manifold for one filter

Manual manifolds - 4-way valve

Ø	Code	Description
63	00747	4-WAY VALVE MANUAL MANIFOLD D. 63
75	00749	4-WAY VALVE MANUAL MANIFOLD D. 75
90	00754	4-WAY VALVE MANUAL MANIFOLD D. 90
110	00758	4-WAY VALVE MANUAL MANIFOLD D.110
125	00763	4-WAY VALVE MANUAL MANIFOLD D.125
140	00767	4-WAY VALVE MANUAL MANIFOLD D.140
160	09205	4-WAY VALVE MANUAL MANIFOLD D.160
200	09160	4-WAY VALVE MANUAL MANIFOLD D.200
225	09164	4-WAY VALVE MANUAL MANIFOLD D.225
250	26244	4-WAY VALVE MANUAL MANIFOLD D.250

Manual manifolds - 5-way valve

Ø	Code	Description
63	00769	5-WAY VALVE MANUAL MANIFOLD D. 63
75	00771	5-WAY VALVE MANUAL MANIFOLD D. 75
90	00776	5-WAY VALVE MANUAL MANIFOLD D. 90
110	00780	5-WAY VALVE MANUAL MANIFOLD D.110
125	00785	5-WAY VALVE MANUAL MANIFOLD D.125
140	00789	5-WAY VALVE MANUAL MANIFOLD D.140
160	09177	5-WAY VALVE MANUAL MANIFOLD D.160
200	09180	5-WAY VALVE MANUAL MANIFOLD D.200
225	09185	5-WAY VALVE MANUAL MANIFOLD D.225
250	19133	5-WAY VALVE MANUAL MANIFOLD D.250

Electric manifolds - 4-way valve

Ø	Code	Description
63	00747E	4-WAY VALVE ELECTRIC MANIFOLD D. 63
75	00749E	4-WAY VALVE ELECTRIC MANIFOLD D. 75
90	00754E	4-WAY VALVE ELECTRIC MANIFOLD D. 90
110	00758E	4-WAY VALVE ELECTRIC MANIFOLD D.110
125	00763E	4-WAY VALVE ELECTRIC MANIFOLD D.125
140	00767E	4-WAY VALVE ELECTRIC MANIFOLD D.140
160	09205E	4-WAY VALVE ELECTRIC MANIFOLD D.160
200	09160E	4-WAY VALVE ELECTRIC MANIFOLD D.200
225	09164E	4-WAY VALVE ELECTRIC MANIFOLD D.225
250	26244E	4-WAY VALVE ELECTRIC MANIFOLD D.250

Electric manifolds - 5-way valve

Ø	Code	Description
63	00769E	5-WAY VALVE ELECTRIC MANIFOLD D. 63
75	00771E	5-WAY VALVE ELECTRIC MANIFOLD D. 75
90	00776E	5-WAY VALVE ELECTRIC MANIFOLD D. 90
110	00780E	5-WAY VALVE ELECTRIC MANIFOLD D.110
125	00785E	5-WAY VALVE ELECTRIC MANIFOLD D.125
140	00789E	5-WAY VALVE ELECTRIC MANIFOLD D.140
160	09177E	5-WAY VALVE ELECTRIC MANIFOLD D.160
200	09180E	5-WAY VALVE ELECTRIC MANIFOLD D.200
225	09185E	5-WAY VALVE ELECTRIC MANIFOLD D.225
250	19133E	5-WAY VALVE ELECTRIC MANIFOLD D.250

Pneumatic manifolds - 4-way valve

Ø	Code	Description
63	00747N	4-WAY VALVE PNEUMATIC MANIFOLD D. 63
75	00749N	4-WAY VALVE PNEUMATIC MANIFOLD D. 75
90	00754N	4-WAY VALVE PNEUMATIC MANIFOLD D. 90
110	00758N	4-WAY VALVE PNEUMATIC MANIFOLD D.110
125	00763N	4-WAY VALVE PNEUMATIC MANIFOLD D.125
140	00767N	4-WAY VALVE PNEUMATIC MANIFOLD D.140
160	09205N	4-WAY VALVE PNEUMATIC MANIFOLD D.160
200	09160N	4-WAY VALVE PNEUMATIC MANIFOLD D.200
225	09164N	4-WAY VALVE PNEUMATIC MANIFOLD D.225
250	26244N	4-WAY VALVE PNEUMATIC MANIFOLD D.250

Pneumatic manifolds - 5-way valve

Ø	Code	Description
63	00769N	5-WAY VALVE PNEUMATIC MANIFOLD D. 63
75	00771N	5-WAY VALVE PNEUMATIC MANIFOLD D. 75
90	00776N	5-WAY VALVE PNEUMATIC MANIFOLD D. 90
110	00780N	5-WAY VALVE PNEUMATIC MANIFOLD D.110
125	00785N	5-WAY VALVE PNEUMATIC MANIFOLD D.125
140	00789N	5-WAY VALVE PNEUMATIC MANIFOLD D.140
160	09177N	5-WAY VALVE PNEUMATIC MANIFOLD D.160
200	09180N	5-WAY VALVE PNEUMATIC MANIFOLD D.200
225	09185N	5-WAY VALVE PNEUMATIC MANIFOLD D.225
250	19133N	5-WAY VALVE PNEUMATIC MANIFOLD D.250

+ info
PDB Product Database
Further information on **PRODUCTS**
www.astralpool.com

CONTROL BOXES



Control panel for valve manifolds

Control panel for electrically or pneumatically actuated manifolds of 4 or 5 valves. For automatic filtration, backwashing, rinsing and shut-down operations. Fitted with automatic programming installation that enables the execution of all the required operations and can be personalized to suit your requirements. Quick and easy installation with numbered terminal connection strip. Voltage 230 V single phase. Does not include valve manifold.

	Code	Standard Pack	Standard Weight in kg	Standard Volume in m^3
For 4 valves				
2 valves without block, 2 valves with block. Electric actuator	**41005**	1	6	0.04
2 valves double acting, 2 valves spring return. Pneumatic actuator	**41009**	1	6	0.04
For 5 valves				
2 valves without block, 3 valves with block. Electric actuator	**41007**	1	6	0.04
2 valves double acting, 3 valves spring return. Pneumatic actuator	**41011**	1	6	0.04

Distance between PVC valve manifold supports

Ø mm	RATED PRESSURE			
	0.4 MPa	0.6 MPa	1.0 MPa	1.6 MPa
10	-	-	-	0.3
12	-	-	-	0.3
16	-	-	-	0.3
20	-	-	-	0.4
25	-	-	0.5	0.5
32	-	-	0.6	0.6
40	-	0.8	0.8	0.8
50	-	0.9	0.9	0.9
63	1.0	1.0	1.0	1.0
75	1.0	1.0	1.2	1.2
90	1.0	1.2	1.3	1.4
110	1.2	1.3	1.5	1.7
125	1.3	1.5	1.7	1.9
140	1.3	1.6	1.8	2.0
160	1.5	1.7	2.0	2.2
180	1.6	1.8	2.1	2.4
200	1.7	1.9	2.3	2.6
225	1.8	2.1	2.5	2.9
250	1.8	2.2	2.6	3.0
280	2.0	2.3	2.8	3.2
315	2.1	2.5	3.0	3.5
355	2.2	2.7	3.2	3.8
400	2.4	2.8	3.4	4.0
450	2.5	3.0	3.7	4.3
500	2.7	3.2	3.9	4.6

Overhead PVC pressure pipes should be mounted on supports. The distance between them should be as shown in the table.
Distance between supports in m (according to UNE 53.399).

These distances are based on a maximum temperature of 20 ºC.
In the case of higher temperatures, the values shown should be multiplied by the following reduction coefficients:

- Between 20 and 30 ºC, coefficient of 0.9

- Between 35 and 45 ºC, coefficient of 0.85

In vertical installations, the distance between supports may be as shown in the table multiplied by 1.3.

Factory programmed automation as follows

	Actuator types	
	Electric	**Pneumatic**
For 4 valves	2 valves without block	2 double acting valves
	2 valves with block	2 spring return valves
	Program A	Program C
	Code 41005	Code 41009
	4 valves without block	4 valves without block
	Program A	Program A
	Code 41006	Code 41010
For 5 valves	2 valves without block	2 double acting valves
	3 valves with block	4 spring return valves
	Program B	Program D
	Code 41007	Code 41011
	5 valves without block	5 double acting valves
	Program B	Program B
	Code 41008	Code 41012

+ info
PDB Product Database
Further information on **PRODUCTS**
www.astralpool.com

SUPPORTS FOR VALVE MANIFOLDS



Valve manifold brackets

Easy assembly valve manifold brackets from Ø 63 mm for all filter types. Totally adjustable in height, consisting of vertical support pipes in zinc-plated steel, together with box of accessories.

	Code	Standard Pack	Standard Weight in kg	Standard Volume in m³
Zinc-plated steel				
Height 1.85 m	**28690**	1	3.8	-
Height 2.30 m	**28691**	1	4.5	-
Height 3.0 m	**28692**	1	5.9	-
Box of accessories consisting of:				
2 support brackets with anti-vibration clamps,				
and fixing bolts and accessories				
For Ø 63 mm pipe	**42598**	1	1.5	0.011
For Ø 75 mm pipe	**28693**	1	1.5	0.011
For Ø 90 mm pipe	**28694**	1	1.5	0.011
For Ø 110 mm pipe	**28695**	1	1.5	0.011
For Ø 125 mm pipe	**28696**	1	1.5	0.011
For Ø 140 mm pipe	**28697**	1	1.5	0.011
For Ø 160 mm pipe	**28698**	1	2.5	0.011
For Ø 200 mm pipe	**28699**	1	2.5	0.011
For Ø 225 mm pipe	**28700**	1	2.5	0.011
Accessory box for additional supports:				
Fixing plug and protection cap	**28701**	1	-	-



Wall brackets for valve manifold

For all filter type from Ø 63 mm pipe onwards. Consisting in zinc- plated steel support bracket with anti-vibration clamp and fixing screws. Supply: 1 vertical support with manifold bracket.

	Code	Standard Pack	Standard Weight in kg	Standard Volume in m³
For Ø 63 mm pipe	**35585**	1	1.0	0.007
For Ø 75 mm pipe	**00855**	1	1.2	0.007
For Ø 90 mm pipe	**00856**	1	1.3	0.007
For Ø 110 mm pipe	**00857**	1	1.4	0.007
For Ø 125 mm pipe	**00858**	1	1.4	0.007
For Ø 140 mm pipe	**00859**	1	1.5	0.007
For Ø 160 mm pipe	**00860**	1	1.6	0.007
For Ø 200 mm pipe	**00861**	1	1.7	0.007
For Ø 225 mm pipe	**00862**	1	1.7	0.007
For Ø 250 mm pipe	**36120**	1	2.0	0.011
For Ø 315 mm pipe	**36602**	1	2.4	0.011

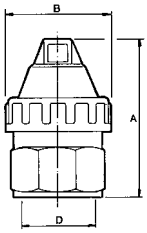





Air vents

	Code	Standard Pack	Standard Weight in kg	Standard Volume in m³
Standard Air vent				
In cast Aluminium painted				
yellow. Inner ball in PVC				
Ø 1"	**04143**	12	2.3	0.009
Ø 1 1/2"	**04144**	12	4.0	0.009
Ø 2"	**04145**	12	4.5	0.018
Double effect air vent				
Body in PP and fibreglass. Maximum pressure 16 Kg/cm²				
Seal in nitrile rubber.				
Ø 1"	**49381**	1	0.3	0.001
Ø 2" U-bend outlet with PVC elbow	**49382**	1	0.7	0.001

Code	D	A (mm)	B (mm)
04143	1"	74	44
04144	1 1/2"	105	69
04145	2"	105	69

FILTRATION MEDIA & ACCESSORIES



OC-1 filtration medium

OC-1 filtration load: The future of pool filtration

OC refers to Open Cell and OC-1 is a mechanical filter that uses open-cell filtration technology to filter water with a high quality, increasing the water saving and energy potential. The filtration media is an extruded plastic compound comprising a base of High Density Polyethylene with Calcium Carbonate

- Saves water: exclusive filtration method that reduces water consumption by more than 40%
- Saves power: lets you use a smaller pump or lower the power to get the same flow you would with traditional filtration media.
- Saves time: OC-1 reduces backwash frequency to less than a third of traditional methods, meaning more leisure time for you.
- The OC-1 media has been tested in accordance with current European standard EN16713-1.

	Code	Standard Pack	Standard Weight in kg	Standard Volume in m^3
OC-1 50L filtration media bag	**69752**	1	9.0	0.05
OC-1 20L filtration media bag	**69753**	1	3.6	0.02



Active Clear Glass

AstralPool launches the new activated glass filter media Active Clear Glass.

The new product has the following benefits:

- More efficient and environmentally friendly filtration.
- Greater filtration capacity.
- Water and energy savings.
- Cleaner filter bed as bacteria does not remain trapped and fewer chemical products are needed.

Granulomety	Code	Standard Pack	Standard Weight in kg	Standard Volume in m^3
0.5 mm - 1.0 mm	**57011**	1	25.0	0.667
1.0 mm - 3.0 mm	**57012**	1	25.0	0.667
3.0 mm - 7.0 mm	**57013**	1	25.0	0.667

			% Volume of the filter bed	
	Code	**Range**	**Filters D < 900 mm**	**Filters D > 900 mm**
Range 1	**57011**	0.5 - 1.0 mm	0.8	0.6
Range 2	**57012**	1.0 - 3.0 mm	0	0.2
Range 3	**57013**	3,0 - 7,0 mm	0.2	0.2



Silex

Please ask for a quotation for other grades. 25 Kg bag.

	Code	Standard Pack	Standard Weight in kg	Standard Volume in m^3
Granulometry 0.4 - 0.8 mm	**00596**	1	25	0.667

+ info PDB Product Database
Further information on **PRODUCTS**
www.astralpool.com

FILTRATION MEDIA & ACCESSORIES

Gravel

Please ask for a quotation for other grades. 25 Kg bag.

	Code	Standard Pack	Standard Weight in kg	Standard Volume in m^3
Granulometry 1 - 2 mm	**10697**	1	25	0.667
Granulometry 3 - 5 mm	**11346**	1	25	0.667

Anthracite

Please ask for a quotation for other grades. 50 Kg bag.

	Code	Standard Pack	Standard Weight in kg	Standard Volume in m^3
Granulometry 0.8 - 1.6 mm	**03696**	1	50	0.8

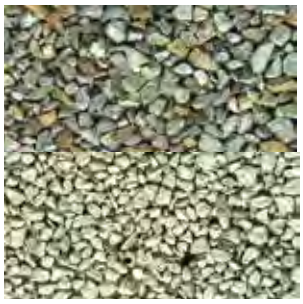

Zeolite

Natural porous material that has higher filtration qualities than the normal substrate. It can be compared to that of diatomaceous earth but at a lower price and lasting much longer. Bags 30 Kg.

	Code	Standard Pack	Standard Weight in kg	Standard Volume in m^3
Zeolite standard 0.5 - 1 mm	**25845**	1	-	-
Zeolite standard 1-2 mm	**25846**	1	30	0.023
Zeolite standard 2-5 mm	**25847**	1	30	0.023



Gauge panel unit

Including air vents.

	Code	Standard Pack	Standard Weight in kg	Standard Volume in m^3
With pressure gauges 3 kg/cm^2	**00729**	1	1	0.007
With pressure gauges 6 kg/cm^2	**00730**	1	1	0.007



COMMERCIAL POOLS
PUMPS

564 • Self-priming pumps
565 • Centrifugal pumps
572 • Strainers
574 • Valves and hoses

Optional:
60 Hz pumps (code XXXX-0810).

SELF-PRIMING PUMPS



Kivu Pump

High performance plastic self-priming pump for high flow rates (1500 rpm).
- 3 power modes: 3 HP, 4 HP and 5.5 HP.
- Low sound level: as low as 59 dBA.
- Hydraulic efficiency without prefilter 78% (as per ISO 9906 standard).
- High quality mechanical seal for salt water.
- IEC high efficiency motors (IE3).
- Standard motor shaft (compatibility with any pump manufacturer).
- Pump comes with pre-filter (in 2 packages: pump + prefilter).

	Code	Standard Pack	Standard Weight in kg	Standard Volume in m³
Kivu 3 HP 230/400V 50Hz + prefilter	**66047**	1	56.4	0.35
Kivu 3 HP 400/690V 50Hz + prefilter	**63042**	1	56.4	0.35
Kivu 4 HP 230/400V 50Hz + prefilter	**66048**	1	59.4	0.35
Kivu 4 HP 400/690V 50Hz + prefilter	**63043**	1	59.4	0.35
Kivu 5.5 HP 230/400V 50Hz + prefilter	**66049**	1	66.4	0.35
Kivu 5.5 HP 400/690V 50Hz + prefilter	**63044**	1	66.4	0.35

AstralPool Toolbox app for IOS and Android

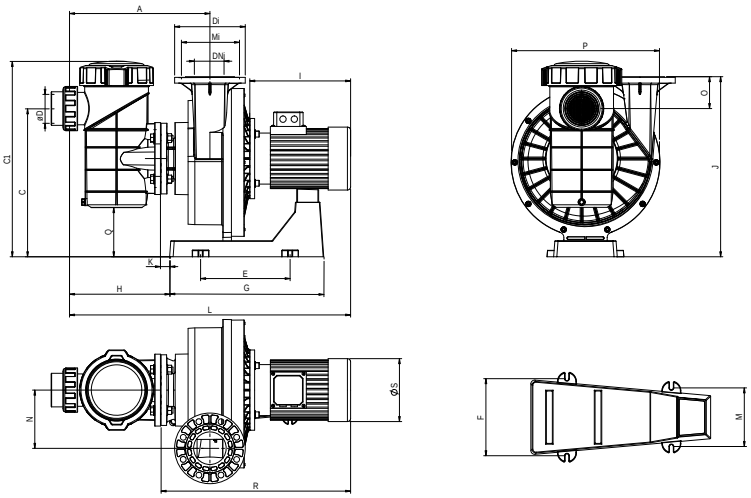

Code	Power	A	D	DI	DNi	C	C1	E	F	G	H	I	J	K	L	M	N	O	P	Q	R	Ma	Mi
	HP	mm																					
63042 66047	3	440	90	220	100 - 4"	462	610	279	206	480	313	320	561	29,5	882	157	181.5	100	460	154	590	-	180
63043 66048	4	440	90	220	100 - 4"	462	610	279	206	480	313	320	561	29,5	882	157	181.5	100	460	154	590	-	180
63044 66049	5,5	440	90	220	100 - 4"	462	610	279	206	480	313	345	561	156	906	157	181.5	100	460	154	621	-	180

Graph showing performance of pumps without prefilter

Pressure/Flow rate

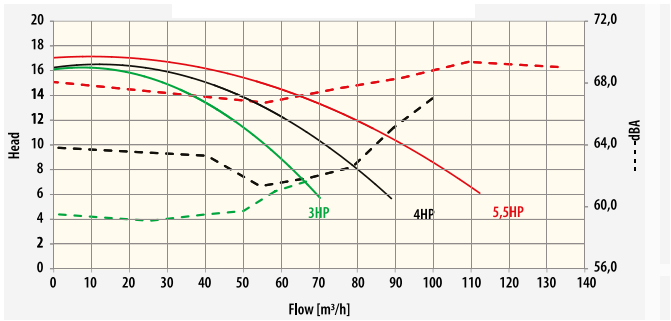

Power/Flow rate

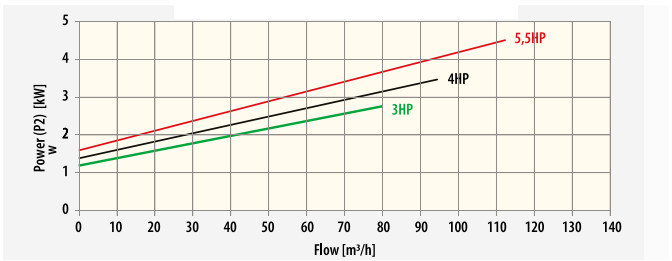

Optional:
60 Hz pumps (code XXXX-0810).

CENTRIFUGAL PUMPS

Kivu Pump



Kivu Pump



Kivu pump
Side view

AstralPool
Toolbox app for
IOS and Android

High performance plastic centrifugal pump for public pools that works at 1500 rpm.
- 3 power modes: 7.5 HP, 10 HP and 15 HP.
- Low sound level: as low as 66 dBA.
- Hydraulic efficiency without prefilter 85% (9906 ISO standard).
- High quality mechanical seal for salt water.
- IEC high efficiency motors (IE3).
- Standard motor shaft (compatibility with any pump manufacturer).
- Product with GS marking.
- Pump comes with pre-filter (in 2 packages: pump + prefilter).

	Code	Standard Pack	Standard Weight in kg	Standard Volume in m^3
Kivu 7.5 HP 230/400 V 50Hz + prefilter	**56633**	1	107.4	0.43
Kivu 7.5 HP 400/690 V 50Hz + prefilter	**56634**	1	107.4	0.43
Kivu 10 HP 230/400 V 50Hz + prefilter	**56635**	1	117.9	0.45
Kivu 10 HP 400/690 V 50Hz + prefilter	**56637**	1	117.9	0.45
Kivu 15 HP 230/400 V 50Hz + prefilter	**56638**	1	151.2	0.49
Kivu 15 HP 400/690 V 50Hz + prefilter	**56639**	1	151.2	0.49

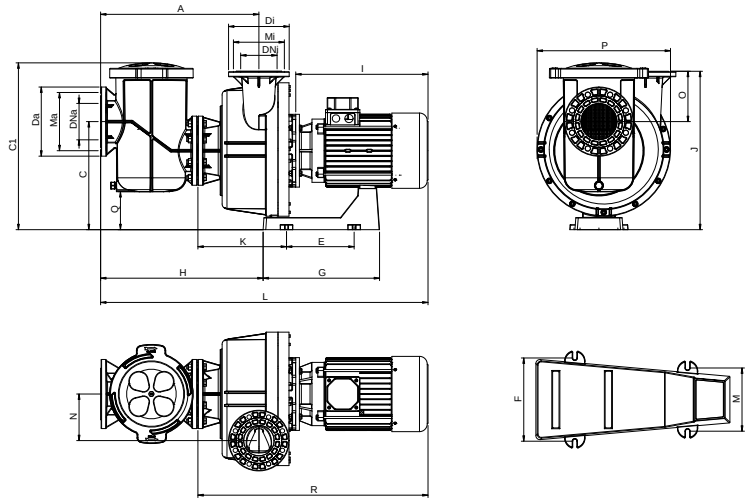

Code	Power	A	DA	DI	DNA	DNi	C	C1	E	F	G	H	I	J	K	L	M	N	O	P	Q	R	Ma	Mi
	HP	mm																						
56633 56634	7.5	653	285	250	150 - 6"	125 - 5"	446	688	279	206	290	540	410	653	141	1215	157	192	208	550	157	815	240	210
56635 56637	10	653	285	250	150 - 6"	125 - 5"	446	688	279	206	290	540	445	653	141	1250	157	192	208	550	157	850	240	210
56638 56639	15	653	285	250	150 - 6"	125 - 5"	446	688	279	206	290	670	510	653	271	1315	157	192	208	550	157	915	240	210

Graph showing performance of pumps without refilter

Pressure/Flow rate

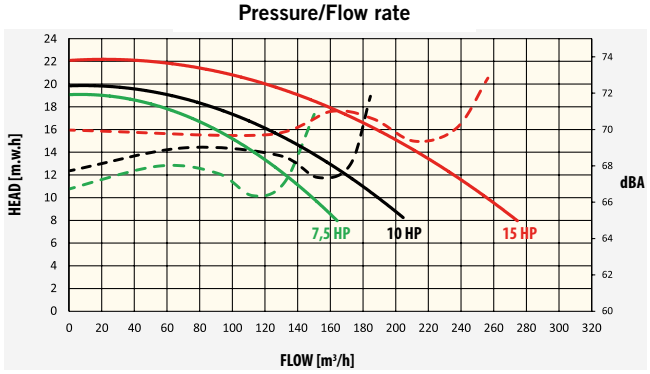

Power/Flow rate

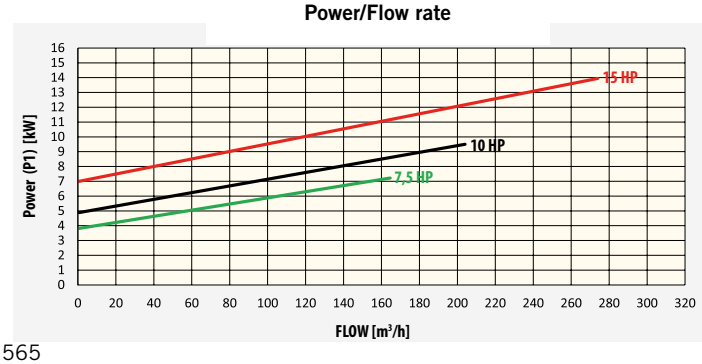

Possibility of placing orders with the following variations:
- bronze turbine
- stainless steel turbine (AISI 316-L).
- Viton mechanical seals.

CENTRIFUGAL PUMPS

Colorado pump with prefilter



3000 rpm plastic centrifugal electric pumps with prefilter for pools, perfect for large, low-pressure flow rates. Prefilter with transparent lid and wishbone closure; easy access. Pump bodies and prefilter manufactured in fibreglass-reinforced polypropylene. Plastic turbine. Pump shaft and prefilter basket in stainless steel. IE2 motors with 3000 rpm IP-55 protection at 230/400 V or 400/690 V and 50 Hz. From 4 HP to 12.5 HP.

	Code	Standard Pack	Standard Weight in kg	Standard Volume in m³
4 HP. 230/400 V	**44706-120**	1	56	0.252
5.5 HP. 230/400 V	**44707-120**	1	56	0.252
7.5 HP. 230/400 V	**44708-120**	1	57	0.252
7.5 HP. 400/690 V	**44709-120**	1	57	0.252
10 HP. 230/400 V	**44710-120**	1	68	0.252
10 HP. 400/690 V	**44711-120**	1	68	0.252
12.5 HP, 230/400 V	**44712-120**	1	72	0.252
12.5 HP, 400/690 V	**44713-120**	1	72	0.252

IE3 version: **The same** codes with suffix -320

Code	VOLTAGE (V)	POWER		DIMENSIONS (mm)								
		kW	HP	A	B	ØC	D	E	F	G	H	L
44706-120	230/400	2.9	4	375	255	90	405	470	330	200	535	820
44707-120	230/400	4	5.5	375	255	110	405	470	330	200	535	840
44708-120	230/400	5.5	7.5	375	255	110	405	470	330	200	535	840
44709-120	400/690											
44710-120	230/400	7.4	10	375	255	110	405	470	330	200	535	910
44711-120	400/690											
44712-120	230/400	9.2	12.5	375	255	110	405	470	330	200	535	955
44713-120	400/690											

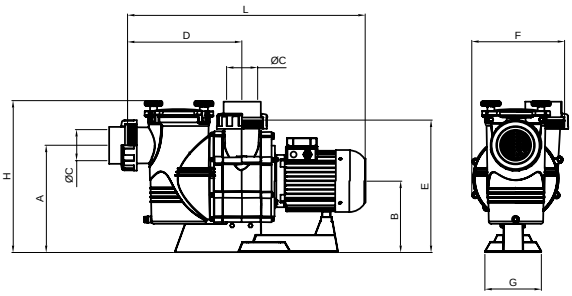

Colorado pump without prefilter



3000 rpm plastic centrifugal electric pumps with no prefilter for pools, perfect for large, low-pressure flow rates. Pump bodies manufactured in fibreglass-reinforced polypropylene. Plastic turbine. Stainless steel pump shaft. IE2 motors with 3000 rpm IP-55 protection at 230/400 V or 400/690 V and 50Hz. From 7.5 HP to 12.5 HP.

	Code	Standard Pack	Standard Weight in kg	Standard Volume in m³
4 HP. 230/400 V	**44714-120**	1	39	0.166
4 HP. 230/400 V	**44715-120**	1	44	0.166
7.5 HP. 230/400 V	**44716-120**	1	50	0.166
7.5 HP. 400/690 V	**44717-120**	1	50	0.166
10 HP. 230/400 V	**44718-120**	1	61	0.166
10 HP. 400/690 V	**44719-120**	1	61	0.166
12.5 HP, 230/400 V	**44720-120**	1	65	0.166
12.5 HP, 400/690 V	**44721-120**	1	65	0.166

IE3 version: The same codes with suffix -320

Code	VOLTAGE (V)	POWER		DIMENSIONS (mm)							
		kW	HP	A	B	ØC	D	F	G	H	L
44714-120	230/400	2,9	4	255	255	90	105	330	200	470	510
44715-120	230/400	4	5.5	355	355	110	105	330	200	470	530
44716-120	230/400	5.5	7.5	255	255	110	105	330	200	470	530
44717-120	400/690										
44718-120	230/400	7.4	10	255	255	110	105	330	200	470	600
44719-120	400/690										
44720-120	230/400	9.2	12.5	255	255	110	105	330	200	470	645
44721-120	400/690										

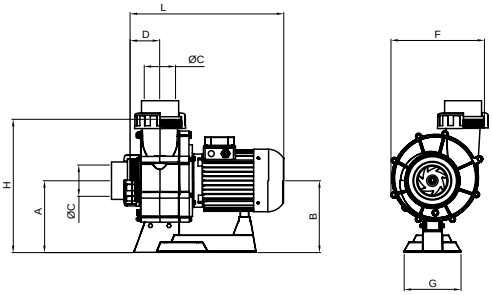

Available in power modes from 4 to 12.5 HP.

Yield curves - Models with a prefilter

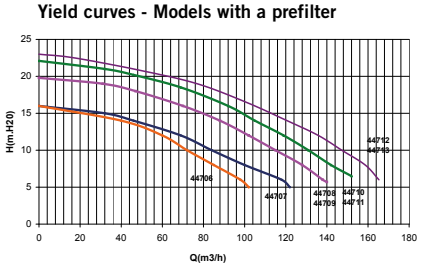

Yield curves - Models without a prefilter

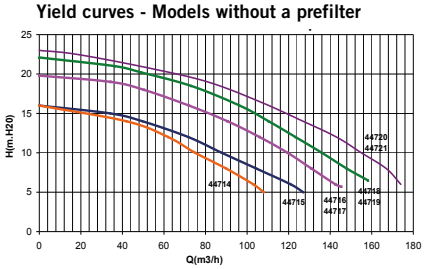

Optional:
60 Hz pumps (code XXXX-0810).



CENTRIFUGAL PUMPS

2.860 r.p.m. Maxim pump

Pump body and supports in plastic, AISI-316 stainless steel motor shaft with double insulation. Motor has IP-55 protection rating. Prefilter basket with a capacity of 8 litres. Transparent prefilter lid.

	Code	Standard Pack	Standard Weight in kg	Standard Volume in m³
Maxim 3.5 HP pump	**08003**	1	32	0.184
Maxim 4.5 HP pump	**08004**	1	34	0.184
Maxim 5.5 HP pump	**08005**	1	37	0.184

Technical features Maxim pump

Code	Power	Connection	Voltage	mca					
				8	10	12	14	16	19.5
				m³/h					
08003	3.5 HP	3" threaded joint	230/400 V III	56	50	42	34	23	0
08004	4.5 HP		230/400 V III	74	66	57	46	30	0
08005	5.5 HP		230/400 V III	88	78	67	53	34	0

Performance curves

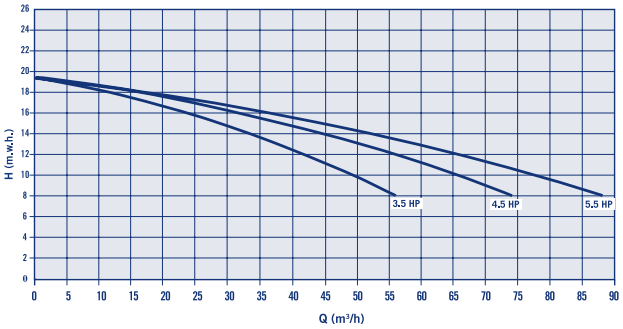

Size

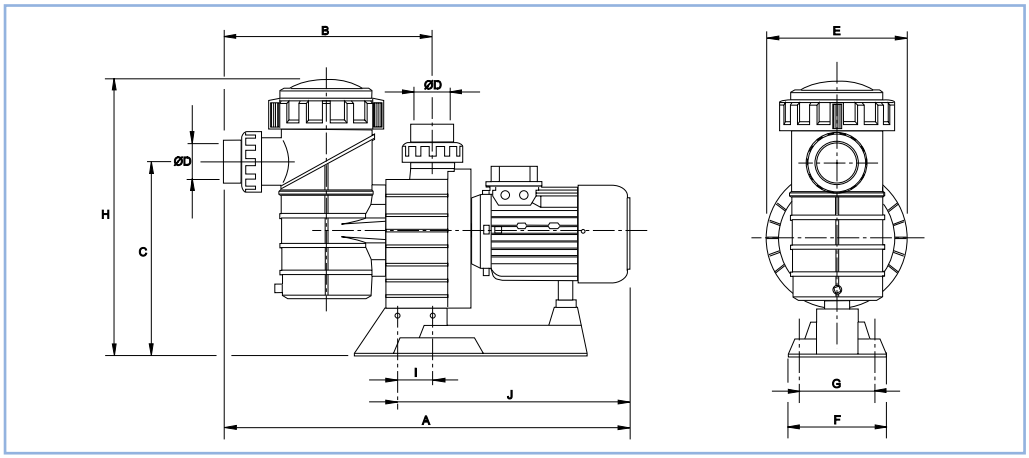

Model	Type	Voltage	A mm	B mm	C mm	Ø D mm	E mm	F mm	G mm	H mm	I mm	J mm
08003	3,5	230/400	815	430	385	90	287	200	140	530	65	468
08004	4,5	230/400	815	430	385	90	287	200	140	530	65	468
08005	5,5	230/400	847	430	385	90	287	200	140	530	65	500

Optional:
60 Hz pumps (code XXXX-0810).



230 V valid for voltages between 220 & 240 V
400 V valid for voltages between 380 & 420 V
690 V valid for voltages between 660 & 720 V

More technical specifications on the next page

CENTRIFUGAL PUMPS

Aral C-3000 pump

Made in cast iron. Mechanical seal in stainless steel. IP-54 motor protection. AISI-316 stainless steel shaft. With stainless steel AISI-304 strainer basket and prefilter. 3000 rpm.
Connections PN 16 according to DIN 2501. Also available with bronze impeller.

	Code	Standard Pack	Standard Weight in kg	Standard Volume in m^3
Aral C-3000 pump 3 HP	**01193**	1	71	0.162
Aral C-3000 pump 4 HP	**01195**	1	74	0.162
Aral C-3000 pump 5.5 HP DN 80-3"	**01197**	1	80	0.162
Aral C-3000 pump 5.5 HP DN 100-4"	**01199**	1	89	0.197
Aral C-3000 pump 7.5 HP	**01201**	1	113	0.197
Aral C-3000 pump 10 HP	**01203**	1	115	0.197
Aral C-3000 pump 12.5 HP	**01205**	1	115	0.197
Aral C-3000 pump 15 HP	**01207**	1	121	0.197

Technical features Aral C-3000 pump

Code	Power	Connection	Voltage	mca									
				8	10	12	14	16	18	19	20	21	22
				m^3/h									
01193	2.20 kW (3 HP)	DN 90-3"	230/400 V III	59	54	46	40	30	0				
01195	2.95 kW (4 HP)	DN 80-3"	400/690 V III	67	61	55	48	40	n/a	0			
01197	4.00 kW (5.5 HP)	DN 80-3"	400/690 V III	78	72	66	60	52	n/a	n/a	0		
01199	4.00 kW (5.5 HP)	DN 100-4"	400/690 V III	100	89	70	60	48	n/a	n/a	0		
01201	5.50 kW (7.5 HP)	DN 100-4"	400/690 V III	126	115	100	80	60	n/a	0			
01203	7.50 kW (10 HP)	DN 100-4"	400/690 V III	145	140	123	107	86	n/a	n/a	0		
01205	9.20 kW (12.5 HP)	DN 125-5"	400/690 V III	165	158	149	135	115	n/a	n/a	n/a	0	
01207	11,04 kW (15 HP)	DN 125-5"	400/690 V III	195	190	175	160	140	n/a	n/a	n/a	n/a	0

CENTRIFUGAL PUMPS

Technical features Aral C-3000 pump

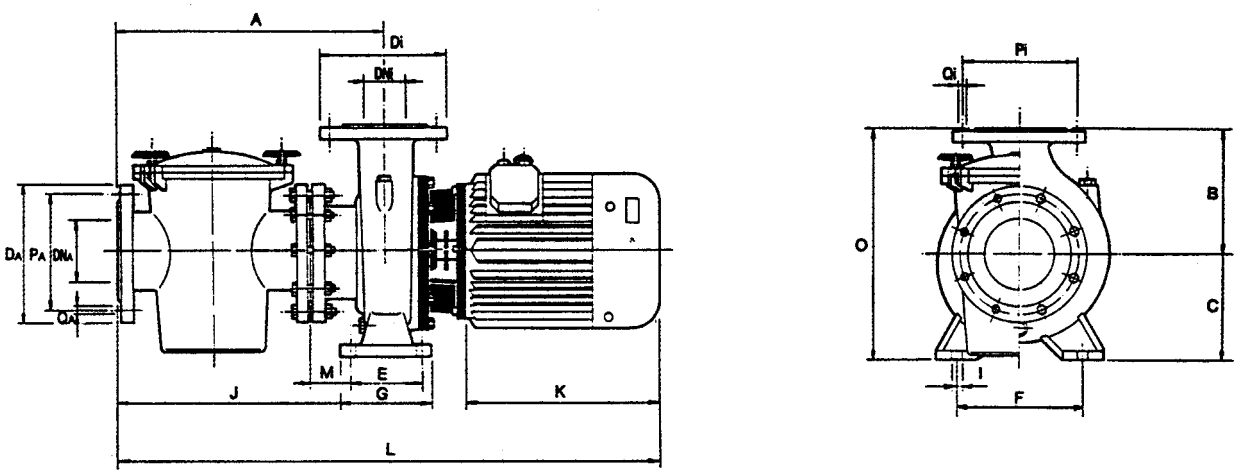

Code	Voltage V	Intensity		Power		Suction connection					Return connection				
		III 230 V	III 400 V	kW	HP	D_A (mm)	DN_A	P_A (mm)	Q_A		D_i (mm)	DN_i	P_i (mm)	Q_i	
									Nº	Ø (mm)				Nº	Ø (mm)
01193	230/400	9	5.2	2.20	3	200	80-3”	160	8	18	200	80-3”	160	8	18
01195	400/690	–	7	2.95	4	200	80-3”	160	8	18	200	80-3”	160	8	18
01197	400/690	–	9.1	4	5.5	200	80-3”	160	8	18	200	80-3”	160	8	18
01199	400/690	–	9.1	4	5.5	220	100-4”	180	8	18	220	100-4”	180	8	18
01201	400/690	–	11	5.5	7.5	220	100-4”	180	8	18	220	100-4”	180	8	18
01203	400/690	–	15	7.5	10	220	100-4”	180	8	18	220	100-4”	180	8	18
01205	400/690	–	22	9.2	12.5	250	125-5”	210	8	18	220	100-4”	210	8	18
01207	400/690	–	22.5	11.04	15	250	125-5”	210	8	18	250	125-5”	210	8	18

Code	Power		Dimensions (mm)											
	kW	HP	A	B	C	E	F	G	I	J	K	L	M	O
01193	2.20	3	485	180	160	70	212	100	14	435	245	888	65	340
01195	2.95	4	485	180	160	70	212	100	14	435	245	888	65	340
01197	4	5,5	485	180	160	70	212	100	14	435	273	920	65	340
01199	4	5,5	487	205	160	95	187	125	14	425	273	940	55	365
01201	5.5	7,5	487	205	160	95	187	125	14	425	315	976	55	365
01203	7.5	10	487	205	160	95	187	125	14	425	315	976	55	365
01205	9.2	12,5	487	205	160	95	187	125	14	425	355	1016	55	365
01207	11.04	15	517	233	181	95	187	125	14	455	355	1029	70	365

Optional:
60 Hz pumps (code XXXX-0810).

CENTRIFUGAL PUMPS



Aral C-1500 pump

Made in cast iron. Mechanical seal in stainless steel. IP-54 motor protection. Stainless steel AISI- 316 shaft. With stainless steel (AISI-304 11 L - AISI-316 37 L) strainer basket. Connections PN 16 according to DIN 2501. 1,450 rpm. Connections PN 16 according to DIN 2501. Connections PN 16 according to DIN 2501.
Also available with bronze impeller.

	Code	Standard Pack	Standard Weight in kg	Standard Volume in m^3
Aral C-1500 pump 4 HP	**01210**	1	115.0	0.195
Aral C-1500 pump 5.5 HP DN 80-3"	**01212**	1	142.0	0.195
Aral C-1500 pump 7.5 HP	**01216**	1	170.0	0.407
Aral C-1500 pump 10 HP	**01218**	1	179.0	0.407
Aral C-1500 pump 12.5 HP	**01220**	1	215.0	0.407
Aral C-1500 pump 15 HP	**01222**	1	245.0	0.407
Aral C-1500 pump 20 HP	**01224**	1	255.0	0.407
Aral C-1500 pump 25 HP	**01226**	1	255.0	0.407

400 V valid for voltages between 380 & 420 V
690 V valid for voltages between 660 & 720 V

More technical specifications on the next page

Technical features Aral C-1500 pump

Code	Power	Suction Connection	Connection Return	Voltage	mca					
					10	12	14	16	18	20
					m^3/h					
01210	3.00 kW (4 HP)	DN 80-3"	DN 65-2½"	400/690 V III	68	60	45	0	0	0
01212	4.00 kW (5.5 HP)	DN 80-3"	DN 65-2½"	400/690 V III	88	80	70	58	0	0
01216	5.50 kW (7.5 HP)	DN 100-4"	DN 80-3"	400/690 V III	115	101	87	70	0	0
01218	7.50 kW (10 HP)	DN 100-4"	DN 80-3"	400/690 V III	150	140	125	115	NA	0
01220	9.20 kW (12.5 HP)	DN 125-5"	DN 100-4"	400/690 V III	192	175	155	130	NA	0
01222	11 kW (15 HP)	DN 125-5"	DN 100-4"	400/690 V III	200	185	165	145	125	95
01224	15,00 kW (20 HP)	DN 150-6"	DN 125-5"	400/690 V III	240	210	180	145	105	0
01226	18.40 kW (25 HP)	DN 150-6"	DN 125-5"	400/690 V III	275	258	234	202	169	120

CENTRIFUGAL PUMPS

Technical features Aral C-1500 pump

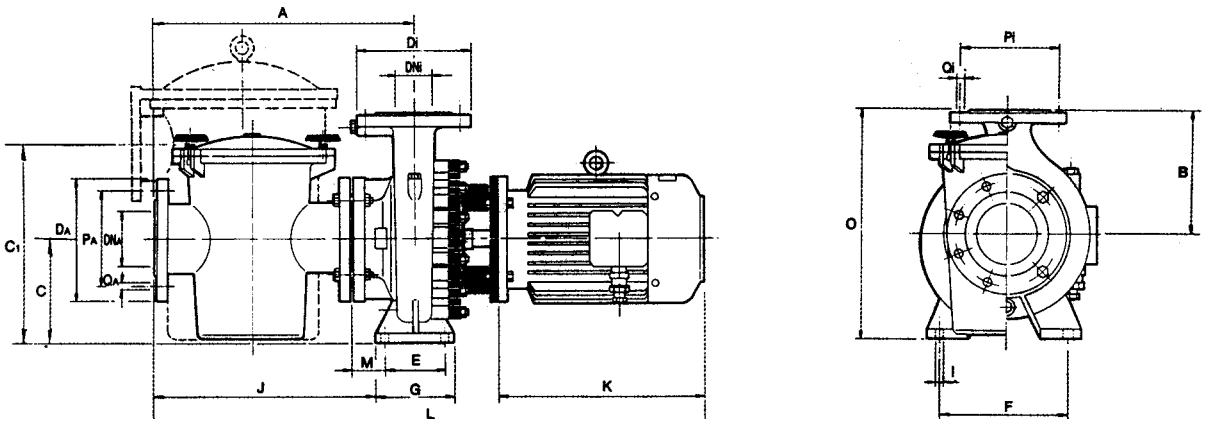

Code	Voltage V	Intensity		Power		Suction connection					Return connection				
		III 230 V	III 400 V	kW	HP	D_A (mm)	DN_A	P_A (mm)	Q_A		D_i (mm)	DN_i	P_i (mm)	Q_i	
									Nº	Ø (mm)				Nº	Ø (mm)
01210	400/690	–	7	3	4	200	80-3"	160	8	18	185	65-2 1/2"	145	4	18
01212	400/690	–	9.7	4	5.5	200	80-3"	160	8	18	185	65-2 1/2"	145	4	18
01216	400/690	–	12.3	5.5	7.5	220	100-4"	180	8	18	200	80-3"	160	8	18
01218	400/690	–	16.4	7.5	10	220	100-4"	180	8	18	200	80-3"	160	8	18
01220	400/690	–	19	9.20	12.5	250	125-5"	210	8	18	220	100-4"	180	8	18
01222	400/690	–	24	11	15	250	125-5"	210	8	18	220	100-4"	180	8	18
01224	400/690	–	32	15	20	285	150-6"	240	8	22	250	125-5"	210	8	18
***01226**	400/690	–	36	18.40	25	285	150-6"	240	8	22	250	125-5"	210	8	18

Code	Power		Dimensions (mm)												
	kW	HP	A	B	C	C1	E	F	G	I	J	K	L	M	O
01210	2.95	4	482	225	180	–	95	250	125	14	419	310	880	50	405
01212	4	5.5	484	253	196	–	120	280	162	18	403	333	967	34	449
01216	5.5	7.5	514	282	193	–	120	315	162	18	433	410	1072	69	486
01218	7.5	10	514	282	193	–	120	315	162	18	433	450	1112	69	486
01220	9.20	12.5	522	280	224	–	120	315	162	18	441	450	1128	77	504
01222	11	15	522	280	224	–	120	315	162	18	441	490	1188	77	504
01224	*15	20	747	356	255	507	120	315	158	18	668	520	1438	87	611
01226	*18.40	25	747	356	255	507	120	315	158	18	668	555	1473	87	611

*With strainer 37 l

+ info
PDB Product Database
Further information on **PRODUCTS**
www.astralpool.com

STRAINERS



Strainer in polypropylene and fibreglass

Flanges drilled according to DIN-2501 Standard. Supplied with 3 piece coupling at the inlet. 8 litre capacity. Inlet size: Ø 90 mm and outlet Ø 110 mm.

Code	Standard Pack	Standard Weight in kg	Standard Volume in m^3
09879	1	8.4	0.098



Strainer in polyester and fibreglass 33 l capacity

Flanges drilled according to DIN-2501 Standard. Hoop type clamp. Drain plug. Maximum working pressure: 1.5 bar.

	Code	Standard Pack	Standard Weight in kg	Standard Volume in m^3
33 l Capacity				
Connections Ø 90 mm, 37 m^3/h	**04656**	1	27	0.180
Connections Ø 110 mm, 55 m^3/h	**04657**	1	27	0.180
Connections Ø 125 mm, 72 m^3/h	**04658**	1	27	0.180
Connections Ø 140 mm, 90 m^3/h	**04659**	1	27	0.180



Strainer in polyester and fibreglass 60 l capacity

Flanges drilled according to DIN-2501 Standard. Hoop type clamp. Drain plug. Maximum working pressure: 1.5 bar.

	Code	Standard Pack	Standard Weight in kg	Standard Volume in m^3
60 l Capacity				
Connections Ø 160 mm, 118 m^3/h	**10886**	1	39	0,357
Connections Ø 200 mm, 184 m^3/h	**10887**	1	39	0,357
Connections Ø 225 mm, 233 m^3/h	**10888**	1	39	0,357



Strainer in polyester and fibreglass with sight glass lid 33 l capacity

Flanges drilled according to DIN-2501 Standard. Hoop type clamp. Drain plug. Maximum working pressure: 1.5 bar.

	Code	Standard Pack	Standard Weight in kg	Standard Volume in m^3
33 l Capacity				
Connections Ø 90 mm, 37 m^3/h	**15644**	1	27	0.180
Connections Ø 110 mm, 55 m^3/h	**15645**	1	27	0.180
Connections Ø 125 mm, 72 m^3/h	**15646**	1	27	0.180
Connections Ø 140 mm, 90 m^3/h	**15647**	1	27	0.180
Strainer 3", 37 m^3/h	**15648**	1	27	0.180
Strainer 4", 55 m^3/h	**15649**	1	27	0.180

33 l POLYESTER STRAINERS

Code	15644	15645	15646	15647	15648	15649
H	635	635	635	635	635	635
D	475	475	475	475	475	475
M	353	353	353	353	353	353
Ø	90	110	125	140	3"	4"
E	500	516	532	546	500	516

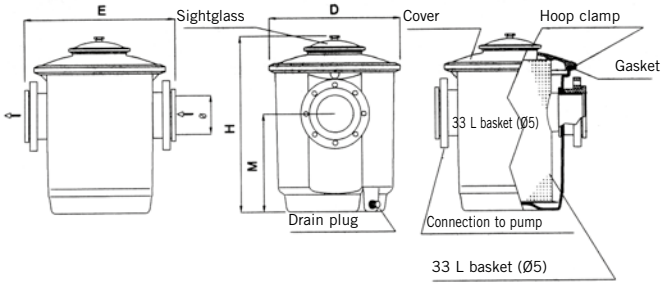

STRAINERS



Strainer in polyester and fibreglass with sightglass lid 60 l capacity

Flanges drilled as per DIN-2501 Standard. Hoop type clamp. Drain plug. Maximum working pressure: 1,5 bar.

	Code	Standard Pack	Standard Weight in kg	Standard Volume in m³
60 l Capacity				
Connections Ø 160 mm. 118 m³/h	**15650**	1	39	0.357
Connections Ø 200 mm. 174 m³/h	**15651**	1	39	0.357
Connections Ø 225 mm. 233 m³/h	**15652**	1	39	0.357
Strainer 6". 118 m³/h	**15653**	1	39	0.357
Strainer 8". 233 m³/h	**15654**	1	39	0.357

60 l POLYESTER STRAINER

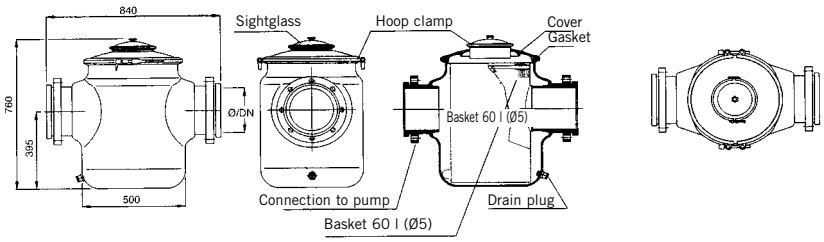



Kivu strainers

Flanges drilled to standard DIN-2501. Quick closing lid. Polypropylene basket. Drain plug. Maximum working pressure 1.5 bar.

	Code	Standard Pack	Standard Weight in kg	Standard Volume in m³
25 l Capacity				
6" Connections DN 150	**56733**	1	9.9	0.08



Strainer Astramax pump

Strainer for Astramax pump. Body in ABS and fibreglass. With transparent lid and anti-corrosive strainer basket. Suction 2¼" male thread. Connection to pump 2¾" female thread.

Code	Standard Pack	Standard Weight in kg	Standard Volume in m³
16104	1	1.5	0.017



Aral 11 l

Aral strainers

Housing and cover in cast iron. AISI-304 Stainless Steel Strainer basket. Flange connection are manufactured in accordance with DIN-2501 Standard. Maximum working pressure 2.5 bar.

	Code	Standard Pack	Standard Weight in kg	Standard Volume in m³
11 l Capacity				
Flanges DN 65 (2½") DN 65 (2½")	**20026**	1	35	0.051
Flanges DN 80 (3") DN 80 (3")	**20028**	1	35	0.051
Flanges DN 100 (4") DN 100 (4")	**20029**	1	35	0.051
Flanges DN 125 (5") DN 125 (5")	**20030**	1	35	0.051
Flanges DN 80 (3") DN 65 (2½")	**20031**	1	35	0.051
Flanges DN100 (4") DN 80 (3")	**20032**	1	35	0.051
Flanges DN 125 (5") DN 100 (4")	**20033**	1	35	0.051
37 l Capacity				
Flanges DN 150 (6") DN 150 (6")	**01268**	1	129	0.319



Aral 37 l

+ info
PDB Product Database
Further information on **PRODUCTS**
www.astralpool.com

STRAINERS



Strainers in Stainless Steel

With removable basket. Housing in AISI-304 and strainer basket in AISI-316. Models come in varying diameters to suit pump suctions (impeller protection). Rough straining for different installations.

	Code	Standard Pack	Standard Weight in kg	Standard Volume in m³
S.S. strainer DN 100 with PVC flange	**21461**	1	17.6	0.06
S.S. strainer DN 100 TF with PVC flange	**21462**	1	21.6	0.09
S.S. strainer DN 125 with PVC flange	**21463**	1	19.0	0.06
S.S. strainer DN 125 TF with PVC flange	**21464**	1	23.0	0.09
S.S. strainer DN 150 with PVC flange	**21465**	1	24.8	0.08
S.S. strainer DN 150 TF with PVC flange	**21466**	1	31.0	0.13
S.S. strainer DN 200 with PVC flange	**21467**	1	25.4	0.08
S.S. strainer DN 200 TF with PVC flange	**21468**	1	31.6	0.13

TECHNICAL FEATURES

Code	Diameter		Pressure (bar)	External volume					Interior basket				Total weight
	Input connection	Relief		Dimensions (mm)					Material	Dimensions (mm)			
				A	B	H	H1	H2		Ø	H	Perforation	
21461	DN 100	½"	3	292	410	520	294	254	AISI 316	270	350	6 mm	17.6
21462	DN 100	½"	3	292	425	735	593	308	AISI 316	270	415	6 mm	21.6
21463	DN 125	½"	3	292	410	520	294	254	AISI 316	270	350	6 mm	19.0
21464	DN 125	½"	3	292	425	735	593	308	AISI 316	270	415	6 mm	23.0
21465	DN 150	½"	3	350	450	520	294	254	AISI 316	320	350	6 mm	24.8
21466	DN 150	½"	3	350	470	775	595	295	AISI 316	320	415	6 mm	31.0
21467	DN 200	½"	3	350	450	520	294	254	AISI 316	320	350	6 mm	25.4
21468	DN 200	½"	3	350	470	775	595	295	AISI 316	320	415	6 mm	31.6

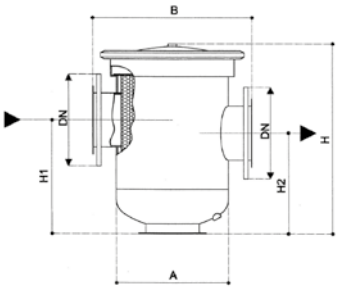

STANDARD model

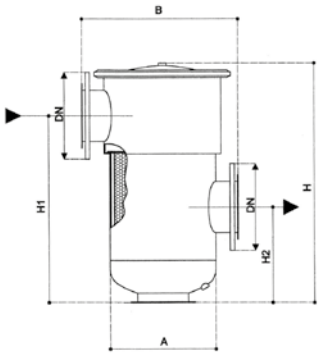

TF model

VALVES AND HOSES



Check valves

Nominal pressure 10 kg/cm². Mounted between flanges. Available in PN 16 and PN 25 under special order.

	Code	Standard Pack	Standard Weight in kg	Standard Volume in m³
Outlets Ø 50 mm	**20239**	1	–	–
Outlets Ø 65 mm	**20240**	1	–	–
Outlets Ø 80 mm	**20241**	1	–	–
Outlets Ø 100 mm	**20242**	1	–	–
Outlets Ø 125 mm	**20243**	1	–	–
Outlets Ø 150 mm	**20244**	1	–	–
Outlets Ø 200 mm	**20245**	1	–	–
Outlets Ø 250 mm	**20246**	1	–	–

VALVES AND HOSES



Vibration absorbent brushing

Flanges in galvanized steel. Elastic material: Polychloroprene. Maximum temperature: 95° C. Nominal pressure: 10 kg/cm^2 (PN/10).

	Code	Standard Pack	Standard Weight in kg	Standard Volume in m^3
Outlets Ø 50 mm	**20231**	1	–	–
Outlets Ø 65 mm	**20232**	1	–	–
Outlets Ø 80 mm	**20233**	1	–	–
Outlets Ø 100 mm	**20234**	1	–	–
Outlets Ø 125 mm	**20235**	1	–	–
Outlets Ø 150 mm	**20236**	1	–	–
Outlets Ø 200 mm	**20237**	1	–	–
Outlets Ø 250 mm	**20238**	1	–	–





COMMERCIAL POOLS
WATER TREATMENT EQUIPMENT

578 • Freepool²
580 • Salt electrolysis and pH/Cl control
584 • Neolysis for public pools
586 • Automatic UV disinfection
589 • Dosing pumps for commercial pools
595 • Continuous flocculation system
595 • Water meters
595 • Automatic regulation and control equipment

FREEPOOL²

freepool²

Salt chlorinator + UV + CO_2



Freepool² disinfects the water thanks to the slat chlorinator and the UV and corrects pH levels by injecting CO_2 through the reactor

75% reduction
in the concentration of **oxidants** in the atmosphere, improving the quality of the atmosphere and reducing the smell of chlorine.

20% reduction
of **combined chloramines** in the water, reducing skin and eye irritation and respiratory complications.

100% reduction
in the addition of diluted **acids and chlorinated products**; completely avoids the need to add chlorinated products and acids.

66% reduction
in the consumption of new supplies of **water**, with savings in water and energy wherever it is installed.

+ info
Further information on **PRODUCTS**
www.astralpool.com

FREEPOOL²

Pools without chemical products that deliver unbeatable water and air quality

Revolutionary public pool water treatment and disinfection system. Freepool² keeps the quality of water to the highest standards without the need to add chemical products.

Freepool² is a unique product that comes with three water treatment technologies that optimize disinfection and pH levels: a low-salinity salt chlorinator for disinfecting the water, medium-pressure UV for reducing combined chloramines and a CO_2 injection system for adjusting the pH.

The main advantages of Freepool² are:

- **Water quality.** Studies carried out by Universidad Autónoma de Barcelona and Hospital Clínic de Barcelona revealed that swimmers' perception of a "perfectly clean" atmosphere increased significantly.
- **Safety.** There is no need to store, handle or measure out chemicals and it is therefore a safer system.

Technical features:

- Chlorine output of 180 g/h
- Three 90 W UV lamps
- CO_2 injector and pH control kit for dosing and absorption

Fluidra Connect compatible





60361

Freepool²

	Code	Standard Pack	Standard Weight in kg	Standard Volume in m³
Freepool² 180 g Cl/h	**70990**	1	-	-

AP PR-200 control unit compatible with Freepool²

Recommended unit:

	Code	Standard Pack	Standard Weight in kg	Standard Volume in m³
AP PR-207 pH/Cl2 PPM*	**60361**	1	-	-
AP PR-207 pH/Cl2 PPM + integrated TRI KIT*	**60361-KIT TRI**	1	-	-
ECC1S Electrolyte / free chlorine sensor gel (seawater)	**64658**	1	-	-

Universitat Autònoma de Barcelona

CLÍNIC BARCELONA Hospital Universitari

The benefits of Freepool have been backed up by two studies conducted by Universitat Autònoma de Barcelona and Hospital Universitari Clínic de Barcelona.

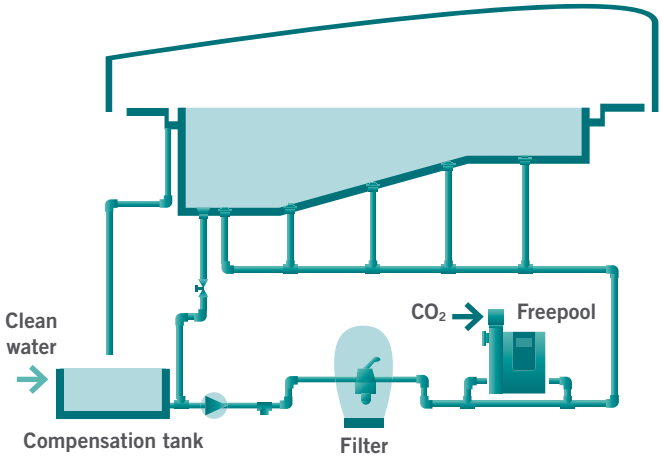

+ info
PDB Product Database
Further information on **PRODUCTS**
www.astralpool.com

SALT ELECTROLYSIS AND PH/CL CONTROL

Salt Electrolysis for public pools

Salt water chlorinators for commercial pools are becoming popular because they are efficient, practical, safe and well priced.

Our wide range of industrial electrolysis systems covers self-cleaning equipment of up to 600 grams/hour of Chlorine, which makes it possible to use saline electrolysis to treat the water at any public use facility.

Main advantages:

- **Safety: There is no need to store, handle or dose any chemical products and therefore it is a much safer system. The raw material stored is common salt.**
- **Savings**: The introduction of saline electrolysis systems can bring net savings in operating costs of around 50-60%, with respect to traditional systems.

Peristaltic pump not included.

	Easy Salt	Easy Salt Next	Pro-Chlore Salt	Nature Salt
Self-cleaning electrodes	10,000 - 12,000 h	10,000 - 12,000 h	12,000 - 15,000 h	12,000 - 15,000 h
Salinity range	5–12 g/l (recommended 5–6 g/l)	5–12 g/l (recommended 5–6 g/l)	5–12 g/l (recommended 5–6 g/l)	1.5–3 g/l (recommended: 2–2.5 g/l) (*)
Production (g/h)	50 - 180	75 - 190	50 - 600	50 - 300

(*) Operating range 1.5–5 g/l depending on the temperature (28–35 ºC) and nominal output (80–100%).



Easy Salt

SELF-CLEANING salt electrolysis system for residential and public pool applications of up to 180 g chlorine/hour. Easy Salt is a compact and cost-competitive piece of equipment. To control more than one unit for the same pool you will need an AP PR-200 external control or Smart Control and the TRI multiple control kit (code 70338).



	Code	Standard Pack	Standard Weight in kg	Standard Volume in m³
Easy Salt 50	**66151**	1	30	0.29
Easy Salt 70	**53799**	1	70	0.29
Easy Salt 90	**53801**	1	80	0.29
Easy Salt 180	**53803**	1	90	0.29
External control option (AP PR 60359-60361-60362, Smart Control 54523-4-5)				
Easy Salt 50 + pH/ORP (EXT-1)	**66153**	1	30	0.29
Easy Salt 70 + pH/ORP (EXT-1)	**53800**	1	70	0.29
Easy Salt 90 + pH/ORP (EXT-1)	**53802**	1	80	0.29
Easy Salt 180 + pH/ORP (EXT-1)	**53804**	1	90	0.29
Optional sensor holder for EXT-1 (EXT-1+66448 = EXT-1D)	**66448**	1	-	-
Optional: Connection kit compatible with Fluidra Connect	**60363**	1	0.39	0.002



COMPATIBLE NN thing
Fluidra Connect compatible



SALT ELECTROLYSIS AND PH/CL CONTROL





COMPATIBLE NN thing

Fluidra Connect compatible



Easy Salt Next

New

Easy Salt Next is the next generarion of salt electrolysis system for residential and public pool applications of up to 190 g chlorine/hour. Easy Salt Next has a compact and cost-competitive equipment design. Made with high-pressure (polypropylene) cells equipped with Premium+ grade electrodes (up to 12.000 hours). The device includes a display LED screen to improve the user interface. Expandable functions with AP PR-200 controllers series.

	Code	Standard Pack	Standard Weight in kg	Standard Volume in m^3
Easy Salt Next 75	**72663**	1	25	0.29
Easy Salt Next 100	**72665**	1	25	0.29
Easy Salt Next 150	**72667**	1	35	0.29
Easy Salt Next 190	**72669**	1	35	0.29
Easy Salt Next 75 pH/ORP	**72664**	1	25	0.29
Easy Salt Next 100 pH/ORP	**72666**	1	25	0.29
Easy Salt Next 150 pH/ORP	**72668**	1	35	0.29
Easy Salt Next 190 pH/ORP	**72670**	1	35	0.29

Valid for Easy Salt/Easy Salt Next and Pro-Chlore Salt and Nature Salt:

	pH	ORP	FREE CHLORINE*
Components supplied	H-035 sensor pH calibration solution (7,0/4,0)	RX-02 sensor ORP calibration solution (470 mV)	CL0102 sensor ID-CAL calibration card
	Two PE ½" sensor holder connectors (standard in all models); sensor holder panel with inductive flow rate detector; flow rate and pre-filter adjustment (standard in ppm models)		
Size	600 x 240 x 120 mm (panel)		
pH control output	230 V / 50-60 Hz / 0,5 A max, ON/OFF		
Scale	0.0 - 9.9	0 - 999 mV	0.0 - 5.0 ppm
Control range	7.0 - 7.8	650 - 850 mV	0.0 - 5.0 ppm
Accuracy	0.1 pH	1 mV	0.1 ppm
Calibration	(pH) Automatic; two modes Fast: one-point calibration Standard: Two-point calibration	Automatic: one-point calibration	FREE CHLORINE: automatic (one-point using external DPD calibrator – not supplied)

*Not available for Easy Salt

+ info
PDB Product Database
Further information on **PRODUCTS**
www.astralpool.com

SALT ELECTROLYSIS AND PH/CL CONTROL



Pro-Chlore Salt

Our Pro-Chlore Salt range includes EX electrodes that provide the highest level of durability in self-cleaning systems. The Pro-Chlore Salt range with its integrated EXTENSION options (EXT-1, EXT-1E, EXT-2) or external control options (AP PR200, Smart Control) includes a control and regulation system for ORP values (Redox) or ppm, as well as pH, allowing improved management of the equipment and an excellent water quality at all times. The Pro-Chlore range can be manufactured, on request, for seawater (Pro Chlore Salt AM Series). To control more than one unit for the same pool you will need an AP PR-200 external control or Smart Control and the TRI multiple control kit (code 70338).



	Code	Standard Pack	Standard Weight in kg	Standard Volume in m³
Pro-Chlore Salt A-50EX	**35252**	1	55	0.17
Pro-Chlore Salt A-80EX	**35253**	1	65	0.19
Pro-Chlore Salt A-120EX	**35254**	1	100	0.36
Pro-Chlore Salt A-180EX	**35255**	1	120	0.36
Pro-Chlore Salt A-300EX	**35256**	1	140	0.36
Pro-Chlore Salt A-600EX	**35257**	1	200	0.74
External control option (AP PR 60359-60361-60362, Smart Control 54523-4-5)				



Pro-Chlore Salt A-50EX + pH/ORP (EXT-1)	**35258**	1	55	0.17
Pro-Chlore Salt A-80EX + pH/ORP (EXT-1)	**35259**	1	65	0.19
Pro-Chlore Salt A-120EX + pH/ORP (EXT-1)	**35260**	1	100	0.36
Pro-Chlore Salt A-180EX + pH/ORP (EXT-1)	**35261**	1	120	0.36
Pro-Chlore Salt A-300EX + pH/ORP (EXT-1)	**35262**	1	140	0.36
Pro-Chlore Salt A-600EX + pH/ORP (EXT-1)	**35263**	1	200	0.74
Optional sensor holder for EXT-1 (EXT-1+57769=EXT-1E)	**57769**	1	-	-



Pro-Chlore Salt A-50EX + pH/PPM (EXT-2)	**45836**	1	60	0.17
Pro-Chlore Salt A-80EX + pH/PPM (EXT-2)	**45837**	1	70	0.19
Pro-Chlore Salt A-120EX + pH/PPM (EXT-2)	**45838**	1	105	0.36
Pro-Chlore Salt A-180EX + pH/PPM (EXT-2)	**45839**	1	125	0.36
Pro-Chlore Salt A-300EX + pH/PPM (EXT-2)	**45840**	1	145	0.36
Pro-Chlore Salt A-600EX + pH/PPM (EXT-2)	**45841**	1	205	0.74
Sensor holder included with EXT-2				

AM

Options for seawater (on request). Example: 45836-AM.

COMPATIBLE NN thing
Fluidra Connect compatible



Optional: Connection kit compatible with Fluidra Connect	**60363**	1	0.39	0.002

	A-50	A-80	A-120	A-180	A-300	A-600
Power supply (AC)	230 V / 50 - 60 Hz			380 V / 50 - 60 Hz		
Power rating (AC) 30C 5 g/l	1.6 A	2.9 A	4.6 A	2.6 A	4.3 A	8.2 A
Cable:	H017 V/K					
Input (AC)	3 x 1.0 mm²	3 x 1.0 mm²	3 x 2.5 mm²	5 x 1.5 mm²	5 x 4 mm²	5 x 4.0 mm²
Output (DC)	2 x 10 mm²	2 x 25 mm²	2 x 35 mm²	2 x 70 mm²	2 x 120 mm²	3 x 240 mm²
Pipe connection	Female thread 1½"	Flanges D63 mm		Flanges D90 mm		
Fuse	5 AT (6 x 32 mm)	7 AT (6 x 32 mm)	10 AT (6 x 32 mm)	QM K10A	QM K20A	QM K25A
Outlet	9 V / 25 A	10 V / 40 A	10 V / 60A	10 V / 90 A	10 V / 150 A	10 V / 300 A
Cooling	Natural	Fan				
Minimum flow rate	9 m³/h	14 m³/h	20 m³/h	30 m³/h	50 m³/h	90 m³/h
Number of plates per electrode	8	12	8	12	16	2 x 15

SALT ELECTROLYSIS AND PH/CL CONTROL

Nature Salt



Nature Salt equipment has a sustainable cycle through the removal of chloramines, 2 g salt/litre operation and chemical-free treatment. SELF-CLEANING industrial salt electrolysis system for public pool applications of up to 300 g chlorine/hour. High-pressure TWINCELL SYSTEM fitted with quality Nature Salt electrodes. To control more than one unit for the same pool you will need an AP PR-200 external control or Smart Control and the TRI multiple control kit (code 70338).

	Code	Standard Pack	Standard Weight in kg	Standard Volume in m³
Nature Salt 50EX/LS	**53810**	1	80	0.17
Nature Salt 80EX/LS	**53811**	1	90	0.19
Nature Salt 120EX/LS	**53812**	1	130	0.36
Nature Salt 180EX/LS	**53813**	1	145	0.36
Nature Salt 300EX/LS	**53814**	1	170	0.36
External control option (AP PR 60359-60361-60362, Smart Control 54523-4-5)				
Nature Salt 50EX/LS + pH/ORP (EXT-1)	**53815**	1	80	0.17
Nature Salt 80EX/LS + pH/ORP (EXT-1)	**53816**	1	90	0.19
Nature Salt 120EX/LS + pH/ORP (EXT-1)	**53817**	1	130	0.36
Nature Salt 180EX/LS + pH/ORP (EXT-1)	**53818**	1	145	0.36
Nature Salt 300EX/LS + pH/ORP (EXT-1)	**53819**	1	170	0.36
Optional sensor holder for EXT-1 (EXT-1+57769=EXT-1E)	**57769**	1	-	-
Nature Salt 50EX/LS + pH/PPM (EXT-2)	**53820**	1	85	0.36
Nature Salt 80EX/LS + pH/PPM (EXT-2)	**53821**	1	95	0.36
Nature Salt 120EX/LS + pH/PPM (EXT-2)	**53822**	1	135	0.36
Nature Salt 180EX/LS + pH/PPM (EXT-2)	**53823**	1	150	0.74
Nature Salt 300EX/LS + pH/PPM (EXT-2)	**53824**	1	175	0.74
Sensor holder included with EXT-2				







Optional:

Connection kit compatible with Fluidra Connect	**60363**	1	0.39	0.002

Fluidra Connect compatible

Self-cleaning electrodes

	Code	Standard Pack	Standard Weight in kg	Standard Volume in m³
Pro-Chlore Salt Series				
A-50EX/EXT-1/EXT-2	**60634**	1	-	-
A-80EX/EXT-1/EXT-2	**60636**	1	-	-
A-120EX/EXT-1/EXT-2	**60676**	1	-	-
A-180EX/EXT-1/EXT-2	**60677**	1	-	-
A-300EX/EXT-1/EXT-2	**60678**	1	-	-
A-600EX/EXT-1/EXT-2	**60679**	1	-	-
Nature Salt Series				
A-50EX/LS/EXT-1/EXT-2	**60680**	1	-	-
A-80EX/LS/EXT-1/EXT-2	**60681**	1	-	-
A-120EX/LS/EXT-1/EXT-2	**60682**	1	-	-
A-180EX/LS/EXT-1/EXT-2	**60683**	1	-	-
A-300EX/LS/EXT-1/EXT-2	**60684**	1	-	-
Easy Salt Series				
EASY SALT 50/EXT-1	**68104**	1	-	-
EASY SALT 70/EXT-1	**60685**	1	-	-
EASY SALT 90/EXT-1	**60686**	1	-	-
EASY SALT 180/EXT-1	**60687**	1	-	-









+ info
PDB Product Database
Technical specifications on the following page

NEOLYSIS FOR PUBLIC POOLS



Neolysis, the most advanced water treatment by AstralPool: + Sustainability + Innovation + Disinfection + Healthy.

Advantages:
- Unbeatable water quality.
- Dual disinfection based on UV and electrolysis.

Characteristics:
- Two options: low salinity of 2–3 g/l (Neo LS) and standard salinity of 6 g/l (Neo S).
- The ultimate in chloramine reduction capacity (UV LP + Electrolysis).
- Self-cleaning electrodes that last 12,000–15,000 hours (NeoLS and Neo S).
- LP HO UV lamp (13,000 hours)
- Patented process.
- To control more than one unit for the same pool you will need an AP PR-200 external control or Smart Control and the TRI multiple control kit (code 70338).

Neolysis S (5-6 g/L) + UV for public pools



EXT-1 + 57769 = EXT-1E



Sensor holder included in EXT-2





Fluidra Connect compatible



	Code	Standard Pack	Standard Weight in kg	Standard Volume in m³
AP NEO/S 50 Gr/h + UV 75 W	**66142**	1	-	-
AP NEO/S 80 Gr/h + UV 90 W	**66143**	1	-	-
AP NEO/S 120 Gr/h + UV 2 x 90 W	**66144**	1	-	-
AP NEO/S 180 Gr/h + UV 3 x 90 W	**68120**	1	-	-
AP NEO/S 300 Gr/h + UV 4 x 90 W	**68123**	1	-	-
External control option (AP PR 60359-60361-60362, Smart Control 54523-4-5)				
AP NEO/S 50 Gr/h + UV 75 W + pH/ORP (EXT-1)	**66145**	1	-	-
AP NEO/S 80 Gr/h + UV 90 W + pH/ORP (EXT-1)	**66146**	1	-	-
AP NEO/S 120 Gr/h + UV 2 x 90 W + pH/ORP (EXT-1)	**66147**	1	-	-
AP NEO/S 180 Gr/h + UV 3 x 90 W + pH/ORP (EXT-1)	**68121**	1	-	-
AP NEO/S 300 Gr/h + UV 4 x 90 W + pH/ORP (EXT-1)	**68124**	1	-	-
Optional sensor holder for EXT-1	**57769**	1	-	-
AP NEO/S 50 Gr/h + UV 75 W + pH/PPM (EXT-2)	**66148**	1	-	-
AP NEO/S 80 Gr/h + UV 90 W + pH/PPM (EXT-2)	**66149**	1	-	-
AP NEO/S 120 Gr/h + UV 2 x 90 W + pH/PPM (EXT-2)	**66150**	1	-	-
AP NEO/S 180 Gr/h + UV 3 x 90 W + pH/PPM (EXT-2)	**68122**	1	-	-
AP NEO/S 300 Gr/h + UV 4 x 90 W + pH/PPM (EXT-2)	**68125**	1	-	-
Optional: Connection kit compatible with Fluidra Connect (without lamp control)	**60363**	1	0.39	0.002

Neolysis LS (1.5-2 g/L) + UV for public pools



EXT-1 + 57769 = EXT-1E



Sensor holder included in EXT-2





Fluidra Connect compatible



	Code	Standard Pack	Standard Weight in kg	Standard Volume in m³
AP NEO 50 Gr/h + UV 75 W	**57753**	1	-	-
AP NEO 80 Gr/h + UV 90 W	**57761**	1	-	-
AP NEO 120 Gr/h + UV 2 x 90 W	**57762**	1	-	-
AP NEO 180 Gr/h + UV 3 x 90 W	**68117**	1	-	-
External control option (AP PR 60359-60361-60362, Smart Control 54523-4-5)				
AP NEO 50 Gr/h + UV 75 W + pH/ORP (EXT-1)	**57763**	1	-	-
AP NEO 80 Gr/h + UV 90 W + pH/ORP (EXT-1)	**57764**	1	-	-
AP NEO 120 Gr/h + UV 2 x 90 W + pH/ORP (EXT-1)	**57765**	1	-	-
AP NEO 180 Gr/h + UV 3 x 90 W + pH/ORP (EXT-1)	**68118**	1	-	-
Optional sensor holder for EXT-1	**57769**	1	-	-
AP NEO 50 Gr/h + UV 75 W + pH/PPM (EXT-2)	**57766**	1	-	-
AP NEO 80 Gr/h + UV 90 W + pH/PPM (EXT-2)	**57767**	1	-	-
AP NEO 120 Gr/h + UV 2 x 90 W + pH/PPM (EXT-2)	**57768**	1	-	-
AP NEO 180 Gr/h + UV 3 x 90 W + pH/PPM (EXT-2)	**68119**	1	-	-
Optional: Connection kit compatible with Fluidra Connect (without lamp control)	**60363**	1	0.39	0.002

NEOLYSIS FOR PUBLIC POOLS

Neolysis LS / S - Technical features

Neolysis S (5 - 6 g/L) + UV			
AP NEO Basic	**AP NEO pH/ORP**	**AP NEO pH/PPM**	**Production Zero Salt Electrolysis + UV**
66142	**66145**	**66148**	50 gr Cl_2 /hr + 75 W UV
66143	**66146**	**66149**	80 gr Cl_2 /hr + 90 W UV
66144	**66147**	**66150**	120 gr Cl_2 /hr + 180 W UV
68120	**68121**	**68122**	180 gr Cl_2 /hr + 270 W UV
68123	**68124**	**68125**	300 gr Cl_2 /hr + 360 W UV

Neolysis LS (1.5 - 2 g/L) + UV			
AP NEO Basic	**AP NEO pH/ORP**	**AP NEO pH/PPM**	**Production Zero Salt Electrolysis + UV**
57753	**57763**	**57766**	50 gr Cl_2 /hr + 75 W UV
57761	**57764**	**57767**	80 gr Cl_2 /hr + 90 W UV
57762	**57765**	**57768**	120 gr Cl_2 /hr + 180 W UV
68117	**68118**	**68119**	180 gr Cl_2 /hr + 270 W UV

LS/S Neolysis electrodes for public pools



	Code	Standard Pack	Standard Weight in kg	Standard Volume in m^3
75-W UV LP-20 lamp (Codes 57753, 57763, 57766, 66142, 66145, 66148)	**60608**	1	0.10	-
90-W UV LP-25 lamp (Codes 57761, 57764, 57767, 68117, 68118, 68119, 66143, 66146, 66149, 68120, 68121, 68122, 68123, 68124, 68125)	**60609**	1	0.10	-
Lamp replacement kit UV LP 2x90 W (Codes 57762, 57765, 57768, 66144, 66147, 66150)	**60619**	1	0.20	-
UV LP-20/25/30 quartz (lamps 75 W and 90 W)	**60631**	1	0.09	-

LS/S Neolysis electrodes for public pools



	Code	Standard Pack	Standard Weight in kg	Standard Volume in m^3
50 gr/h - 75 W Neolysis electrode (Codes 57753, 57763, 57766)	**61119**	1	-	-
80 gr/h - 90 W Neolysis electrode (Codes 57761, 57764, 57767)	**61120**	1	-	-
120 gr/h - 2 x 90 W Neolysis electrode (Codes 57762, 57765, 57768)	**61121**	1	-	-
180 gr/h - 3 x 90 W Neolysis electrode (Codes 68117, 68118, 68119)	**68126**	1	-	-

+ info PDB Product Database
Further information on **PRODUCTS**
www.astralpool.com

AUTOMATIC UV DISINFECTION



AstralPool presents Heliox UV, a new automatic UVC light system, which guarantees double disinfection through a significant reduction in the amount of chloramines (bound chlorine) along with the neutralisation of bacteria, viruses and other microorganisms present in water by impeding their reproduction. The range comprises the Heliox UV LP model for private pools, the Heliox UV MP for public pools.

The advantages of UV-C technology:
UV ray treatment systems are completely automatic, with very low maintenance and running costs. They also have considerable advantages over other systems:

- 100% of pool water is treated.
- The disinfected water is free of unpleasant smells and does not irritate the eyes, thanks to a drastic reduction in the amount of chloramines.
- They save money as fewer chemical products are required.
- They are environmentally friendly because:
  Less fresh water is needed (daily water renewal is reduced).
  Fewer waste by-products are formed, resulting in a reduction in subsequent water treatment.
  The UV-C equipment does not add any chemical products to the water.

Heliox-UV operation
UV-C disinfection is a local treatment (UV chamber), which takes place as the water in the pool circulates through the chamber that contains the UV-C lamps. The accurate delivery of radiation (W UV-C) and residence time in the system ensure the effective neutralisation of 99.9% of microorganisms, as well as the reduction of chloramines to safe levels (<0.6 ppm).



Heliox UV MP for public pools

Heliox UV MP (medium pressure) systems are designed to be used in public pools. These lamps operate over a wide spectrum to cover the whole of the UV region (see graph), which makes possible the effective eradication of chloramines (<0.6 ppm) in the pool water and its efficient disinfection due to the neutralisation of microorganisms (99.9%), including those resistant to chlorine treatment.

NEW

- More compact design (UV reactor in AISI-316).
- Adjustable to between 70 and 100% of rated power, in 1% increments, by means of a self-cooling electronic ballast.
- Fluidra technology (design and manufacturing).
- Calibrated UV-C radiation sensor (mW/cm^2). Precise dose control. Instant power adjustment to process conditions. Saves energy and extends the lamp's lifetime.
- Advanced colour touch screen. System menu for browsing process parameters and log files.
- All UV MP 50-->450 and UV MP 50AWP -> 450AWP models are built in compliance with UL NSF.



Advanced versions:

- Embedded web

The control architecture used in Heliox UV PM systems has a number of features that make them reliable, energy-efficient and scalable to the highest possible level.

The Heliox UV MP systems use two parameters for adjusting the power setting: average radiation and flow. All models have a rated radiation profile that ensures a dose of 60mJ/cm^2. If the flow is lower than the rated value, the same will apply to the required radiation level and the system reduces the power input, thus optimising power consumption and the lamp's lifetime. Likewise, if radiation drops due to losses caused by cloudy water, scaling or lamp emission efficiency, the system will adjust the power so that the right dose is supplied.

	Code	Standard Pack	Standard Weight in kg	Standard Volume in m^3
Heliox UV MP 50	**52200**	1	-	-
Heliox UV MP 80	**52201**	1	-	-
Heliox UV MP 140	**52202**	1	-	-
Heliox UV MP 300	**52203**	1	-	-
Heliox UV MP 450	**52204**	1	-	-
Heliox UV MP 675	**52205**	1	-	-
Heliox UV MP Auto Wiper				
Heliox UV MP 50 W	**58808**	1	-	-
Heliox UV MP 80 W	**58809**	1	-	-
Heliox UV MP 140 W	**58698**	1	-	-
Heliox UV MP 300 W	**58810**	1	-	-
Heliox UV MP 450 W	**58699**	1	-	-
Heliox UV MP 675 W	**58811**	1	-	-

For sea water application, contact with AstralPool

Technical specifications on the following page

AUTOMATIC UV DISINFECTION

Heliox System UV MP lamps





	Code	Standard Pack	Standard Weight in kg	Standard Volume in m³
Lamp UV MP 50/80 (Codes 52200, 52201, 58808, 58809)	**60638**	1	0.125	-
Lamp UV MP 140 (Codes 52202, 58698)	**60639**	1	0.255	-
Lamp UV MP 300/450/675 (Codes 52203, 52204, 52205, 58810, 58699, 58811)	**60642**	1	0.275	-
Quartz tube case MP 50/80/140	**60643**	1	0.050	-
Quartz tube case MP 300/450/675	**60644**	1	0.050	-

Heliox UV LP system for public pools

UV LP Inox and UV LP PE (LP = low pressure) systems are designed to be used in public pools. They act at a wavelength of 254 nm, which is ideal for eliminating microorganisms. They will enable you to benefit from the latest ultraviolet light technology in the field of water treatment.

New features of LP S.S. & LP PE:

Stainless steel and polyethylene versions.
Multi-lamp version.
Fluidra technology (design and manufacturing).
Lamp "ON" indicator.
Electronic counter for working time and ignitions (lamp lifetime control).
Flow switch included as standard.



Heliox UV LP INOX

	Code	Standard Pack	Standard Weight in kg	Standard Volume in m³
Heliox UV LP				
I45 inox 270 W / 90 W (UVC)	**60344**	1	-	-
I65 inox 360 W / 120 W (UVC)	**60345**	1	-	-
I85 inox 450 W / 150 W (UVC)	**60346**	1	-	-
I95 inox 540 W / 180 W (UVC)	**60347**	1	-	-





Heliox UV LP PE

	Code	Standard Pack	Standard Weight in kg	Standard Volume in m³
Heliox UV LP				
P20EX PE 90 W / 30 W (UVC)	**63138**	1	-	-
P25EX PE 180 W / 60 W (UVC)	**63139**	1	-	-
P30EX PE 270 W / 90 W (UVC)	**63140**	1	-	-
P35 PE 270 W / 90 W (UVC)	**60348**	1	-	-
P45 PE 360 W / 120 W (UVC)	**60349**	1	-	-
P60 PE 450 W / 150 W (UVC)	**60354**	1	-	-
P70 PE 540 W / 180 W (UVC)	**60358**	1	-	-
P95 PE 680 W / 204 W (UVC)	**63135**	1	-	-
P140 PE 1020 W / 306 W (UVC)	**63136**	1	-	-
P180 PE 1360 W / 408 W (UVC)	**64347**	1	-	-
P220 PE 1700 W / 510 W (UVC)	**64348**	1	-	-
P260 PE 2040 W / 612 W (UVC)	**64349**	1	-	-
P300 PE 2380 W / 714 W (UVC)	**63137**	1	-	-

AUTOMATIC UV DISINFECTION

Heliox UV LP system for public pools

Material	Code	Model	Flow rate (35 mJ/cm²) Freshwater	Flow rate (35 mJ/cm²) Seawater	Flow rate (60 mJ/cm²) Freshwater	No. Lamps	Rated / UV-C power	Total height	Ø reactor
Stainless steel	60344	UV LP 45	45 m³/h	-	22m³/h	3X90 w	90 UV-C (W)	1092	204
Stainless steel	60345	UV LP 65	65 m³/h	-	30m³/h	4X90 w	120 UV-C (W)	1092	204
Stainless steel	60346	UV LP 85	85 m³/h	-	37m³/h	5X90 w	150 UV-C (W)	1092	204
Stainless steel	60347	UV LP 95	95 m³/h	-	43m³/h	6X90 w	180 UV-C (W)	1092	204
PE	60348	UV LP P35	35 m³/h	26 m³/h	18m³/h	3X90 w	90 UV-C (W)	1020	250
PE	60349	UV LP P45	45 m³/h	33 m³/h	22m³/h	4X90 w	120 UV-C (W)	1020	250
PE	60354	UV LP P60	60 m³/h	45 m³/h	30m³/h	5X90 w	150 UV-C (W)	1020	250
PE	60358	UV LP P70	70 m³/h	53 m³/h	35m³/h	6X90 w	180 UV-C (W)	1020	250
PE	63138	UV LP 20 EX	20 m³/h	15 m³/h	-	1X90 w	30 UV-C (W)	950	200
PE	63139	UV LP 25 EX	25 m³/h	19 m³/h	-	2X90 w	60 UV-C (W)	950	200
PE	63140	UV LP 30 EX	30 m³/h	23 m³/h	-	3X90 w	90 UV-C (W)	950	200
PE	63135	UV LP P95	101 m³/h	62 m³/h	-	2X340 w	204 UV-C (W)	1319	315
PE	63136	UV LP P140	152 m³/h	95 m³/h	-	3X340 w	306 UV-C (W)	1319	315
PE	64347	UV LP P180	198 m³/h	113 m³/h	-	4X340 w	408 UV-C (W)	1319	315
PE	64348	UV LP P220	242 m³/h	151 m³/h	-	5X340 w	510 UV-C (W)	1319	315
PE	64349	UV LP P260	283 m³/h	179 m³/h	-	6X340 w	612 UV-C (W)	1319	315
PE	63137	UV LP P300	327 m³/h	198 m³/h	-	7X340 w	714 UV-C (W)	1319	315

Heliox UV LP lamps





	Code	Standard Pack	Standard Weight in kg	Standard Volume in m³
90-W UV LP-25 lamp (Codes 60344, 60345, 60347, 63138, 63139, 63140, 60348, 60349, 60354, 60358)	**60609**	1	-	-
UV LP-20/25/30 quartz (lamps 75 W and 90 W)	**60631**	1	-	-
340 W UV LP lamp (Codes 63135, 63136, 64347, 64348, 34349, 63137)	**66062**	1	-	-
UV LP 1100MM quartz (Lamps 400 W)	**66063**	1	-	-

+ info PDB Product Database
Further information on **PRODUCTS**
www.astralpool.com

DOSING PUMPS FOR COMMERCIAL POOLS





Exactus membrane dosing pumps

All systems comply with EC regulations. IP-65 protection. Electrical connection: 220/240 V 50/60 Hz. Materials in contact with the liquid: Polypropylene, Viton, Teflon and PVC. Other valve models in different materials available on request. Includes anti-acid plastic housing. Touch sensitive moisture resistant indicator. Drainage valve included. Lubrication-free, minimal maintenance. On request, the unit can be supplied with outlet, level sensor or other operating voltages.

Available materials:

Pump head: PP, and available in PVDF and PTFE to order
Diaphragm: PTFE
Valves: FPM lip valve (Viton) and other elastomers such as EPDM (Dutral), NBR (nitrile) and silicone available to order. Ceramic ball valves available.
Connections: 4 x 6 mm

Installation kit included with all pumps: full suction filter (PP-FPM by Viton), injection valve (PP-FPM by Viton), suction/return piping 2 m + 2 m PVC, 2-m PE distribution hose.

EXACTUS PUMP PERFORMANCE CURVE

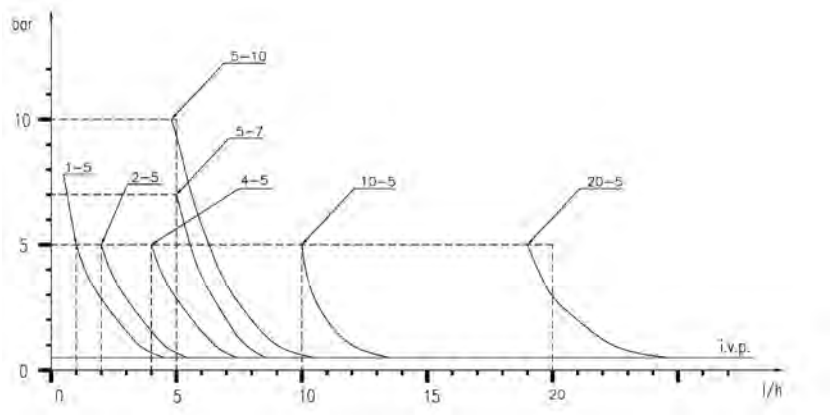



Exactus manual analogue model

Electronic dosing pump for wall mounting or horizontal base. Manually regulated flow rate. Regulation range: 0-100% and 0-20%. Acid resistant plastic housing.

		Code	Standard Pack	Standard Weight in kg	Standard Volume in m^3
Manual Analog	2 l/h - 5 bar	**57153**	1	4	0.005
Manual Analog	2 l/h - 10 bar	**57154**	1	4	0.005
Manual Analog	5 l/h - 7 bar	**57155**	1	4	0.005
Manual Analog	5 l/h - 10 bar	**57156**	1	4	0.005
Manual Analog	10 l/h - 5 bar	**57157**	1	4	0.005
Manual Analog	20 l/h - 5 bar	**57158**	1	4	0.005

+ info
PDB Product Database
Further information on **PRODUCTS**
www.astralpool.com

DOSING PUMPS FOR COMMERCIAL POOLS



Exactus manual digital model

Electronic dosing pump for wall mounting or horizontal base. Manually regulated flow rate with digital control for injection frequency. 3 digit display. Regulation range: 0-100%, with a scale of 1%. Product ready to incorporate level sensor (not included). Acid resistant plastic housing.

		Code	Standard Pack	Standard Weight in kg	Standard Volume in m^3
Manual Digital	2 l/h - 5 bar	**57159**	1	4	0.005
Manual Digital	5 l/h - 7 bar	**57160**	1	4	0.005
Manual Digital	5 l/h - 10 bar	**57161**	1	4	0.005
Manual Digital	10 l/h - 5 bar	**57162**	1	4	0.005
Manual Digital	20 l/h - 5 bar	**57163**	1	4	0.005



Exactus Proportional model

Proportional pump controlled by the mA signal. The pump may be connected to a transmitter/indicator instrument or to another device that feeds in an intensity-modulated signal of 0 to 20mA. The frequency drive of the pump will be proportional to the mA signal received, i.e. the higher the signal, the greater the pump flow rate. The pump can be set to work in reverse mode, i.e. the higher the signal, the lower the flow rate. This model can be adapted for other mA rates (0-20mA, 4-20mA, 20-4mA). Product can incorporate a level sensor (sold separately)

	Code	Standard Pack	Standard Weight in kg	Standard Volume in m^3
Proportional (4-20mA) 5 l/h- 7 bar	**57164**	1	4	0.005
Proportional (4-20mA) 5 l/h- 10 bar	**57165**	1	4	0.005
Proportional (4-20mA) 10 l/h- 5 bar	**57166**	1	4	0.005
Proportional (4-20mA) 20 l/h- 5 bar	**57167**	1	4	0.005



Exactus pH / Rx model

Backlit LCD screen, ON / OFF or proportional operating modes, 0 ÷ 14 pH; -1000 ÷ 1400 mV, pH, RX (ORP) electrode inlet (10 Tera Ohm) (electrode not included), screen resolution: 0.01 pH; ± 1mV. Product can include a level sensor (not included).

	Code	Standard Pack	Standard Weight in kg	Standard Volume in m^3
pH / Rx 5 l/h - 7 bar	**57892**	1	4	0.005
pH / Rx 5 l/h - 10 bar	**57893**	1	4	0.005
pH / Rx 10 l/h - 5 bar	**57894**	1	4	0.005



Exactus Volumetric VFT model

Electronic dosing pump for mounting on base or wall. Proportional volumetric dosing pump that works from signals received from a flow meter. Can be operated in manual or automatic mode depending on the signals received. Product can incorporate a level sensor (sold separately)

	Code	Standard Pack	Standard Weight in kg	Standard Volume in m^3
Volumetric VFT 5 l/h - 7 bar	**57174**	1	4	0.005
Volumetric VFT 5 l/h - 10 bar	**57175**	1	4	0.005
Volumetric VFT 10 l/h - 5 bar	**57176**	1	4	0.005
Volumetric VFT 20 l/h - 5 bar	**57177**	1	4	0.005

DOSING PUMPS FOR COMMERCIAL POOLS



pH sensor

5-metre pH sensor with plastic BNC connector.

Code	Standard Pack	Standard Weight in kg	Standard Volume in m^3
21538	1	0.2	0.001



RX sensor

5-metre RX sensor with plastic BNC connector.

Code	Standard Pack	Standard Weight in kg	Standard Volume in m^3
21539	1	0.3	0.001



pH sensor kit

Includes pH sensor, buffer solutions, sensor holder, level sensor. For Exactus.

Code	Standard Pack	Standard Weight in kg	Standard Volume in m^3
56122	1	-	-



RX sensor kit

Includes RX sensor, buffer solutions, sensor holder, level sensor. For Exactus.

Code	Standard Pack	Standard Weight in kg	Standard Volume in m^3
56124	1	-	-



CL sensor

For CL Exactus model.

Code	Standard Pack	Standard Weight in kg	Standard Volume in m^3
45896	1	-	-



Sensor holder for chamber

Code	Standard Pack	Standard Weight in kg	Standard Volume in m^3
01305	1	0.3	0.001



Sensor holder (pressure)

For working with pressure.

Code	Standard Pack	Standard Weight in kg	Standard Volume in m^3
01306	1	0.3	0.001

+ info PDB Product Database
Further information on **PRODUCTS**
www.astralpool.com

DOSING PUMPS FOR COMMERCIAL POOLS

OPTIMA dosing pump

The OPTIMA dosing pump represents the development of more than 30 years of experience in the automatic dosing field. This new series reduces the number of pumps required to meet the various dosing needs.

The OPTIMA dosing pump series, with its new power supply technology from 90, VCA to 265 VCA and at 50-60 Hz, ensures a precision and reliability never seen before.

Integration of many functions due to its simple programming, an alphanumeric display, the possibility of multilingual programming of the menu and a new technology which permit controlled flow rate and back pressure. Allows to use the same model for various applications providing a great versatility.

Systems manufactured in compliance with EC standards. IP5 protection. 90-265V AC 50/60 Hz power supply. Components in contact with chemicals are made of polypropylene, Viton, Teflon and PVC. (Other materials are available if made to order.) Acid-resistant casing. Moisture-resistant membrane push buttons. Built-in purge valve. No lubrication and little maintenance work required. Sensors and calibration solutions not included. Also available with a peristaltic pump (see page 594).

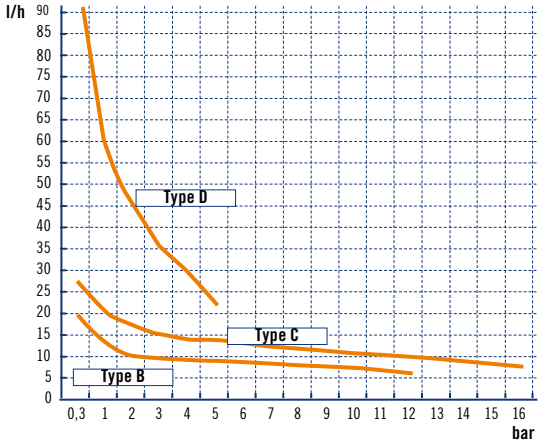

Sensors				
pH sensor with calibration solutions (Code: 36004)	●		●	
Redox sensor with calibration solutions (Code: 36005)		●		●



OPTIMA constant flow rate analogue dosing pump

In OPTIMA constant flow rate analogue dosing pumps, the flow rate can be set as a percentage using the potentiometer under the front panel, which modifies the pump's operation frequency.
The pumps in this range have an level inlet sensor.

Double scale adjustment: the maximum dosing frequency can be divided into 5. This double scale allows users to have two pumps with a single unit.

Power supply from 90 to 230 VCA at 50-60 Hz with plug and switch.

	Code	Standard Pack	Standard Weight in kg	Standard Volume in m^3
Adjustable manual Optima pump				
B-type pump of5–10 bar and 2–5 l/h	**57132**	1	3.5	0.01
C-type pump of 5 bar and 10 l/h	**57133**	1	4.5	0.01
D-type pump of 5 bar and 120 l/h	**57135**	1	4.5	0.01



OPTIMA NEXT constant flow rate analogue dosing pump

The flow rate is fully adjustable from the flow meter. Power supply from 90 to 230 VCA at 50-60 Hz without plug.

	Code	Standard Pack	Standard Weight in kg	Standard Volume in m^3
Adjustable Optima manual pump at 8 bar and 5 l/h	**66164**	1	-	-

DOSING PUMPS FOR COMMERCIAL POOLS



OPTIMA proportional and volumetric dosing pump

OPTIMA pumps provide all the functions of proportional dosing in a single model.

Features:
- Proportional with analogue signals 4 - 20 mA.
- Proportional with digital signals and the possibility of:
  - Multiplying the input impulses (1:n)
  - Dividing the input impulses (n:1)
  - Function in ppm
  - The pump has a memory function for processing input impulses dosing
- Level alarm with pump disconnection.
- Maximum dosing flow rate to prevent overdosing.
- Password for protecting programmed data
- Possibility of alarm connection
- Power supply from 90 to 265 VCA at 50-60 Hz with plug

	Code	Standard Pack	Standard Weight in kg	Standard Volume in m^3
Type B Model 7-10 bar and 5 litres	**57136**	1	3.5	0.01
Type C Model 5 bar and 10 litres	**57137**	1	4.5	0.01
Type D Model 5 bar and 20 litres	**57138**	1	4.5	0.01



OPTIMA NEXT proportional and volumetric dosing pump

OPTIMA pumps provide all the functions of proportional dosing in a single model.

Features:
- Proportional with analogue signals 4 - 20 mA.
- Reading of pulses/minute.
- Chemical product minimum level inlet.
- pulse entry for dosing proportional from pulse emitter counter
- Remote start/stop
- Power supply from 90 to 265 VCA at 50-60 Hz without plug

	Code	Standard Pack	Standard Weight in kg	Standard Volume in m^3
Model 8 bar and 5 litres	**66165**	1	-	-



OPTIMA PLUS dosing pump with pH or redox tester

OPTIMA dosing pump with built-in pH/Redox control. pH/Redox instrument.
Automatic calibration: Calibration by simply pressing a button, with the possibility of controlling the level of sensor efficiency.

Features:
- 90-265 VAC 50/60 Hz power supply
- Manual temperature compensation for pH or optionally automatic via Pt100.
- 4...20mA output for printed register or transmission of the reading.
- Level alarm with pump disconnection or simple warning of lack of product by means of the alarm relay.
- Alarm notifying deactivation of the programmable setpoint across whole of the measurement range.
- Dosing delay time to stop the dosing pump from injecting product in event of poor sensor operation.
- Maximum dosing pump flow rate for preventing overdosing.
- Password for protecting programmed data
- Possibility of alarm connection

	Code	Standard Pack	Standard Weight in kg	Standard Volume in m^3
Type C Optima Redox/pH control dosing pump (10 bar and 5 l/h and 5 bar and 10 l/h)	**66179**	1	4.5	0.01
Optional				
PT100 sensor	**66758**	-	-	-
Flange for PT100	**66759**	-	-	-

COMPATIBLE NN thing

Fluidra Connect compatible

Sensor not included. Sensor holder not included (code 01306)

+ info PDB Product Database
Further information on **PRODUCTS**
www.astralpool.com

DOSING PUMPS FOR COMMERCIAL POOLS



Sensor not included. Sensor holder not included (code 01306)

OPTIMA NEXT dosing pump with pH or redox tester

OPTIMA dosing pump with built-in pH/Redox control instrument.
Automatic calibration by simply pressing a button, with the possibility of controlling the degree of sensor efficiency.

Features:
- Power supply from 90 to 265 VCA at 50-60 Hz without plug
- Manual temperature adjustment for pH or optional automatic adjustment with PT100 (sensor not included).
- Level control input.
- Remote off control.

	Code	Standard Pack	Standard Weight in kg	Standard Volume in m^3
Optima Next dosing pump redox control/pH control at 8 bar and 5 l/h	**66166**	1	-	-



Bracket for mounting above tank

Optional bracket for mounting the OPTIMA series and pH Basic Plus in a horizontal position, for example on top of a chemical products tank.

Code	Standard Pack	Standard Weight in kg	Standard Volume in m^3
36830	1	0.1	0.002



Peristaltic dosing pumps

90/260V 50/60 Hz electrical connection.

The installation kit includes:
- Transparent glass-type flexible 2-m PVC suction pipe.
- Semi-rigid white polyethylene 2-m return pipe.
- 3/8" BSP m. injection valve.
- Pool floor filter.

	Code	Standard Pack	Standard Weight in kg	Standard Volume in m^3
Peristaltic pump 4 l/h (3 bar)	**57179**	1	-	-
Peristaltic pump 12 l/h (1 bar)	**57178**	1	-	-



Polyethylene cylindrical tanks

To hold chemicals for dosage pumps.

	Code	Standard Pack	Standard Weight in kg	Standard Volume in m^3
Capacity: 125 l	**01314**	1	4.5	0.120
Capacity: 250 l	**01315**	1	10.0	0.390
Capacity: 350 l	**01316**	1	14.0	0.510
Capacity: 500 l	**01317**	1	21.5	0.760
Capacity: 1000 l	**28831**	1	-	-



Manual stirrer

For Polyethylene tanks.

	Code	Standard Pack	Standard Weight in kg	Standard Volume in m^3
Length 60 cm	**01318**	1	0.5	0.010
Length 90 cm	**01319**	1	1.2	0.020

CONTINUOUS FLOCCULATION SYSTEM



Floc System

Automation flocculant dosing adjustable flow water pools. Includes: adjustable pump from 151 cm³/h until 1.5 l/h, injector valve, bottom filter, suction and return tube.

	Code	Standard Pack	Standard Weight in kg	Standard Volume in m³
	54528	1	1	0.0044

WATER METERS



Woltman type turbine meters

Woltman type axial turbine water meter, with numerical counter readout, and numbered drums. Dry dial with magnetic transmission. Easily removable gearwork and turbine. Pre-set for pulse emission. IP-68 protection level. CYBLE type pulse emission.

	Code	Standard Pack	Standard Weight in kg	Standard Volume in m³
2" gauge - 50 mm	**20430**	1	12.0	0.004
2½" gauge - 65 mm	**20431**	1	13.6	0.004
3" gauge - 80 mm	**20432**	1	14.6	0.004
4" gauge - 100 mm	**20433**	1	20.0	0.006
5" gauge - 125 mm	**20434**	1	30.0	-
6" gauge - 150 mm	**20435**	1	36.0	0.009
8" gauge - 200 mm	**20436**	1	55.0	0.012
CYBLE type emitter K= 1 l/pulse	**23235**	1	-	-
CYBLE type emitter K= 10 l/pulse	**23235-0010**	1	-	-
CYBLE type emitter K= 100 l/pulse	**23235-0100**	1	-	-

AUTOMATIC REGULATION AND CONTROL EQUIPMENT

60359



60361



60362



AP PR-200 - Compatible Electrolysis

The expert's choice for dosing control. The built-in panels based on Series AP PR controllers provide the best solution for the plug & play devices pre-assembled on the panel. There are several versions for the control of the water's pH, ORP and FREE CHLORINE levels.

AP PR-200 equipment is compatible with the Easy Salt, ProChlore Salt and Neolysis ranges

This is also the recommended solution for experts whenever several chlorination systems must be controlled at the same time from a single control and regulation panel (multiple control through the TIP kit).

	Code	Standard Pack	Standard Weight in kg	Standard Volume in m³
AP PR-206 pH/ORP	**60359**	1	-	-
AP PR-207 pH/Cl2 PPM*	**60361**	1	-	-
AP PR-204 Cl2 PPM*	**60362**	1	-	-
AP PR-204 pH/ORP + integrated TRI KIT*	**60359-KIT TRI**	1	-	-
AP PR-207 pH/Cl2 PPM + integrated TRI KIT*	**60361-KIT TRI**	1	-	-
AP PR-204 Cl2 PPM + integrated TRI KIT*	**60362-KIT TRI**	1	-	-
ECC1S Electrolyte / free chlorine sensor gel (seawater)	**64658**	1	-	-
Optional: TRI kit, 3-unit simultaneous control	**70338**	1	-	-

Fluidra Connect compatible

*** Models with Cl2 ppm: seawater can be used by substituting the gel electrolyte supplied with the standard unit for the gel electrolyte specifically for seawater (code 64658), which must be ordered separately.**

+ info PDB Product Database
Further information on **PRODUCTS**
www.astralpool.com

AUTOMATIC REGULATION AND CONTROL EQUIPMENT

Control Connect: The smart multi-setting controller

COMPATIBLE NN thing
Fluidra Connect compatible

Modbus

A range of multi-setting control panels with colour touchscreen. Easy and efficient control of water sanitation. Fully automated pool water treatment.

- Multi-function TFT colour touchscreen.
- 4 programmable timer relays and 4 digital inputs
- Poolstation (Ethernet as standard).
- Fluidra Connect Compatible.

	Code	Standard Pack	Standard Weight in kg	Standard Volume in m^3
pH / ORP / Temp. with in-line sensor holder	**71537**	1	5.85	-
pH / ORP / Temp. with panel sensor holder	**71538**	1	6.85	-
pH / Cl (ppm) Temp. with panel sensor holder	**71539**	1	6.85	-


71537


71538


71539


60645


60646


60647

Amperometric Chlorine Sensors

	Code	Standard Pack	Standard Weight in kg	Standard Volume in m^3
Free Chlorine Sensor	**60645**	1	0.22	-
ECC1 Electrolyte / Gel for Organic Chlorine Sensor	**60646**	1	0.07	-
Membrane for CL.01.02 Inorganic Chlorine Sensor	**60647**	1	0.02	-
ECC1S Electrolyte / free chlorine sensor gel (Salt water).	**64658**	1	0.02	-


60648


60649

pH / ORP Sensors

	Code	Standard Pack	Standard Weight in kg	Standard Volume in m^3
pH combined sensor	**60648**	1	0.20	-
ORP sensor	**60649**	1	0.20	-

AUTOMATIC REGULATION AND CONTROL EQUIPMENT

Calibration Solutions



60618 60632 60633

	Code	Standard Pack	Standard Weight in kg	Standard Volume in m³
Buffer solution pH 7.0 - 50 mL (Green)	**60618**	1	0.053	-
Buffer solution pH 4.0 - 50 mL (Red)	**60632**	1	0.058	-
Calibration solution 470 mV - 50 mL	**60633**	1	0.060	-

Pool Patrol



The Colorimetric controller unit gives a reply to the demand of the Swimming Pool Market requiring compact, easy and low maintenance device, with IP65 enclosure. The available measures are: Free Chlorine (DPD1), pH, Redox (ORP), Temperature. Thanks to its internal graphic display it is possible to have all measures displayed at the same time. The Plastic Cover assures an easy accessibility to the hydraulic part. Includes: Measuring instrument, flow detector by temperature, pH sensor, ORP sensor, pH calibration solutions, ORP calibration solutions and DPD2 bottle.

	Code	Standard Pack	Standard Weight in kg	Standard Volume in m³
Pool Patrol	**54527**	1	-	-

Controller



Fluidra Connect compatible

The panels in the CONTROLLER range are fully equipped and assembled systems. They are therefore ideal for use in water treatment.
Their simple, compact design makes installation and start-up extremely easy.
They come with all of the components and accessories required for rapid assembly. All assemblies are made of PVC sheets, in various sizes depending on the model.

General technical features

- Range of available sizes depending of the sensor selected.
- Range available for free chlorine: 0-2, 0-5 0-10, 0-20 and 0-200 ppm.
- pH range: 0–14.
- ORP range: +/-1500 mV.
- Temperature range: 0–50ºC.
- Measurement of stable chlorine with low pH dependence.
- Self-calibration of all sizes.
- Alarm signal if water flow is insufficient.
- Instrument with IP65 protection rating.
- 250 V-10 A relays for connecting dosing pumps or salt chlorinators.
- 4-20 mA analogue outlets with repeat signal or manifold for proportional pumps.
- Power supply: 230 V / 50 Hz.
- Setpoints and programmable alarms.
- Pump pause function during calibration and for stopping flow.
- Temperature readings and readjustment (automatic with PT100 sensor included).
- Three types of setpoint settings. On/Off, Proportional in Time and Proportional by Pulses.
- RS485 communications port.

Components included in the assembly:

- Methacrylate sensor holder, with flow regulator, sample taking valve and flow sensor.
- Filter holder and 80 micron filter cartridge for water inlet.
- DPD calibration standard solutions.
- Assembly accessories, and instruction and installation manual.
- Sensors depending on version.

	Code	Standard Pack	Standard Weight in kg	Standard Volume in m³
Controller pH / Redox	**66178**	1	-	-
Controller pH / Free Chlorine	**66177**	1	-	-
Controller pH / ORP / Free Chlorine	**66176**	1	-	-
Controller Free Chlorine	**66175**	1	-	-
pH/Amperometric-free chlorine sensor	**66168**	1	-	-
pH/ORP/Amperometric free chlorine sensor	**66169**	1	-	-
Controller pH / ORP / Free Chlorine / Total amperometric chlorine	**66170**	1	-	-

AUTOMATIC REGULATION AND CONTROL EQUIPMENT

Installation diagram for organic Chlorine or Bromine

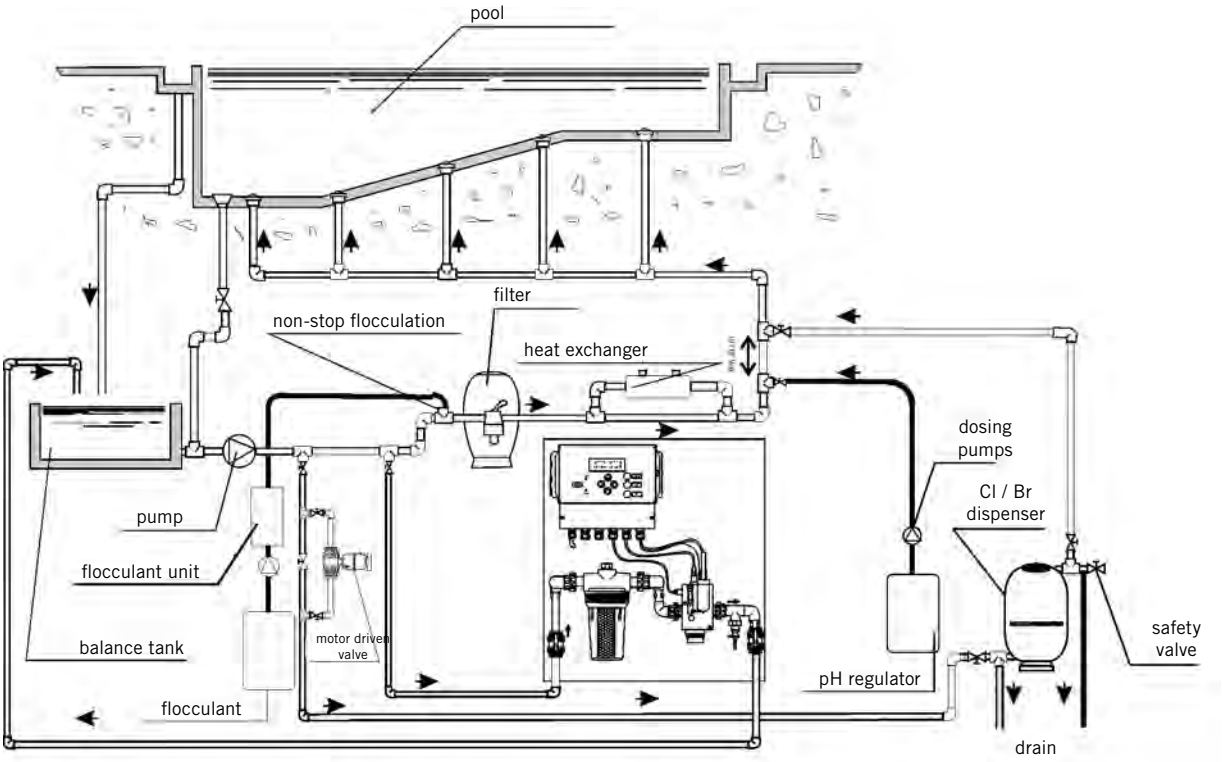

Installation diagram for Inorganic Chlorine

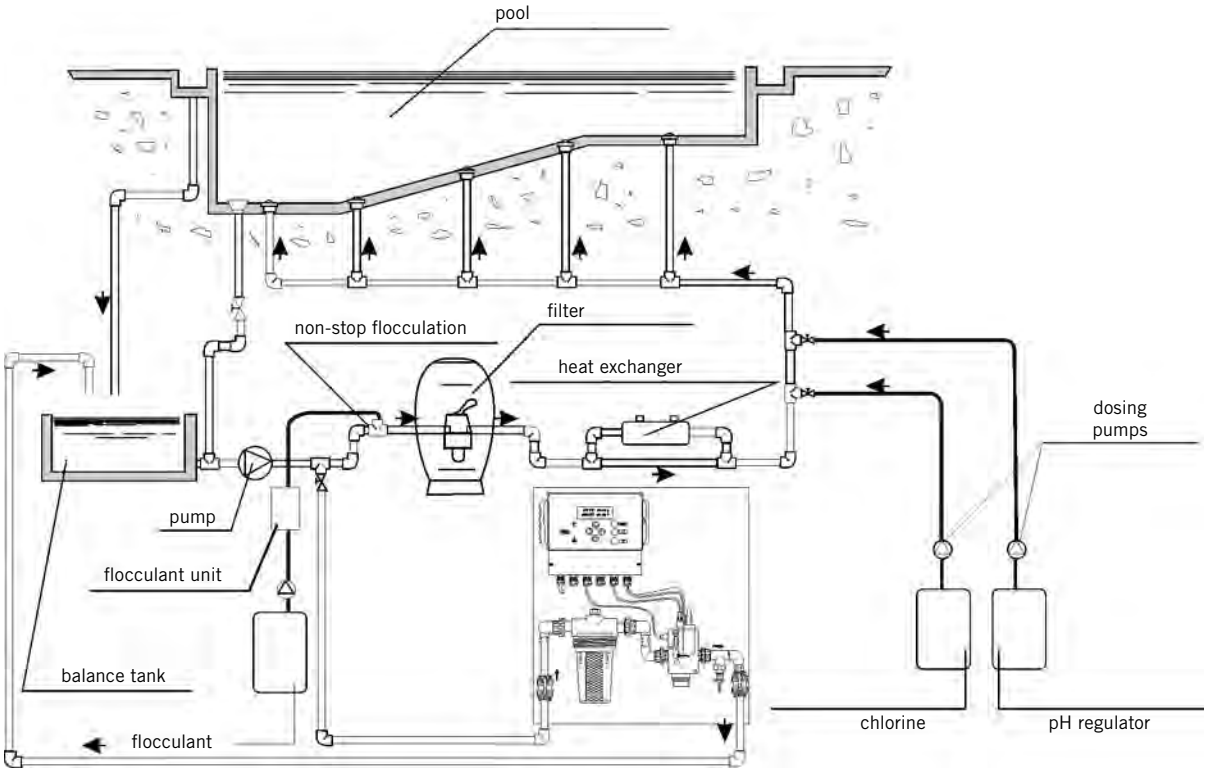



COMMERCIAL POOLS
CLEANING EQUIPMENT

600 • Automatic pool cleaners for public pools
602 • Pool cleaner accessories

ASTRALPOOL



AUTOMATIC POOL CLEANERS FOR PUBLIC POOLS



Ultra 125

Pool cleaner for public pools up to 15 m. Cleans bottom, walls and water line in a 3-hour program. Gyroscope build-in ensures total coverage of the pool floor. It has 23 m of cable and high-quality DC brushless motors (1 pump motor and 1 drive motor). The pump unit provides a flow rate of 19 m³/h. Two-year warranty.

	Code	Standard Pack	Standard Weight in kg	Standard Volume in m³
Ultra 125 suction cleaner	**60165**	1	-	-

Cleaning
Bottom, walls and water line

Pool size
Up to 15 m length and 100 m²

Cleaning cycle
3 H

Cable
23 m



Ultra 250

Pool cleaner for public pools up to 25 m. Cleans bottom, walls and water line. Gyroscope build-in ensures total coverage of the pool floor. Has three programs: 3 h (floor only), 4 h (floor and wall) and 5 h (floor and wall). Program start can be delayed. Has a cleaning level selector. Includes a remote control, 30 metres of cable and a caddy. Fitted with 3 high-quality DC brushless motors, the pump unit provides a suction rate of 19 m³/h. Two-year warranty.

	Code	Standard Pack	Standard Weight in kg	Standard Volume in m³
Ultra 250 suction cleaner	**60140**	1	-	-

Cleaning
Bottom, walls and water line

Pool size
Up to 25 m length and 165 m²

Cleaning cycle
3 h (floor) – 4/5 h (floor + walls)

Cable
30 m





AUTOMATIC POOL CLEANERS FOR PUBLIC POOLS



Ultra 500

Pool cleaner Ultra 500 for commercial pools up to 25 m. Cleans the floor. With a gyroscope build in ensures the total coverage of the pool surface. It has three different programs: 3 h (floor only), 4 h (floor and wall), 5 h (floor and wall). Remote control, 30 meters of cable and a caddy. It has 3 high quality DC brushless motors. The pump capacity is 22 m³/h. A LED indicator that shows when the filter has to be cleaned. It has 36 months of warranty.

	Code	Standard Pack	Standard Weight in kg	Standard Volume in m³
Ultra 500 suction cleaner	**66015**	1	-	-

Cleaning
Floor and walls but not water line

Pool size
Up to 25 m length and 165 m²

Cleaning cycle
3 H (bottom) / 4 / 5 H (bottom + walls)

Cable
30 m





Ultramax Gyro

Pool cleaner specially designed for public pools up to 50 m. The unit is manufactured in resistant materials for the most demanding applications. Gyroscope build-in ensures total coverage of the pool floor. It includes a programmable power pack with different cleaning programs, a remote control, 36 / 45 m of cable and a stainless steel caddy. Fitted with 4 high-quality brushless DC motors, the pump's 2 motors give it a suction rate of 40m³/h and the possibility of setting program length (3 to 6 hours) and delaying start time.

	Code	Standard Pack	Standard Weight in kg	Standard Volume in m³
Ultramax Gyro suction cleaner with 36 m cable	**72687**	1	-	-
Ultramax Gyro suction cleaner with 45 m cable	**62268**	1	-	-

Cleaning
Only bottom

Pool size
Up to 50 m length

Cleaning cycle
3 to 6 H

Cable
36 m / 45 m



POOL CLEANER ACCESSORIES



Pump caddy for stand-alone pool cleaners

Made of anodized aluminium tube and a 460 mm x 370 mm plastic platform. Face plate in AISI-304 stainless steel.

Code	Standard Pack	Standard Weight in kg	Standard Volume in m^3
04648	1	8.06	0.12



COMMERCIAL POOLS & WELLNESS
SPAS, SAUNAS, STEAM BATHS AND EMOTIONAL SHOWERS

Spas

604 • Professional range
604 • Colour chart for spas
604 • Optional equipment
605 • In-ground overflow commercial spas
610 • Stainless steel public spas with overflow channel
612 • Stainless steel public spas
613 • Compact filtration for spas
614 • Complements for spas
616 • Liner accessories
620 • Pool Jet accessories
621 • Accessories for minispas
622 • Electrical accessories for spas / mini spas
623 • Air blowers

Saunas

625 • Saunas

Steam baths

628 • Steam baths

Emotional showers

631 • Emotional showers

Nordic baths

635 • Nordic baths

PROFESSIONAL RANGE



COMMERCIAL SPAS WITH OVERFLOW CHANNEL AND COMPACT UNITS

Spas designed for commercial spaces, gyms, wellness centres, hotels... A wide range of options and finishes that cover all needs.

Spas with both an acrylic and mosaic tile finish.

COLOUR CHART FOR SPAS

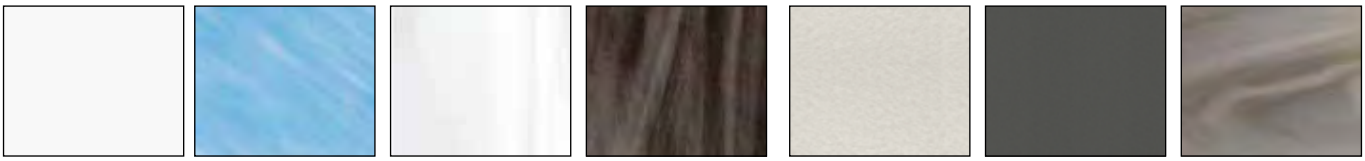

N° 44 WHITE | N° 46 BLUE MARBLE | N° 59 STERLING | N° 64 PEARL SHADOW | N° 72 PEARL CAMEO | N° 27 SILVER | N° 18 SAND

OPTIONAL EQUIPMENT

Chromotherapy LED spotlight, for public spas only



The Mini LED spotlight is the best option for lighting public spas. Thanks to the high intensity LEDs, lighting is similar to that attained with conventional lamps.

The range of LumiPlus Mini 2.0 projectors has a multitude of possible colour combinations and sequences with higher light intensity and better energy efficiency, which result in an 80% saving on electricity consumption compared with conventional projectors, as well as 100,000 hours of useful life time without the need for maintenance.

Chromotherapy LED spotlight option

We reserve the right to change, wholly or partially, the features of our products and the contents of this document, without prior notice

IN-GROUND OVERFLOW COMMERCIAL SPAS

Comparison of models with an overflow channel

						
MODELS	**Coliseum**	**Roma**	**Verona**	**Tokyo 70**	**Olympia**	**Odisea 20**
	20141	**40769**	**70550**	**53990**	**73587**	**45709**
Size cm (± 2 cm)	Ø 300	Ø 300	228 x 228	340 x 240	379 x 249	Ø 230
Positions (Seats / Loungers)	10 (10 / -)	9 (9 / -)	5 (3 / 2)	7 (6 / 1)	11 (11 / -)	5 (5 / -)
Water capacity (litres)	1,944 l	2,290 l	1,200 l	2,200 l	2,490 l	1,120 l
Spa weight Empty	224 kg	310 Kg	147 Kg	373 kg	373 kg	163 kg
Spa weight Full	2,168 kg	2,600 Kg	1,347 Kg	2,573 kg	2,863 kg	1,283 kg
Acrylic	•	•	•	•	•	•
Colours	44 / 46 / 59	44 / 46 / 59	All	44 / 46 / 59	44 / 46 / 59	All
No of jets	16	18	24	58	16	8
No of air nozzles	18	18	12	21	20	10
Headrests	-	-	-	2	-	-
Piezoelectric press buttons	2	2	2	3	2	2
High resistance metallic structure	•	•	•	•	•	•
Projector	Op. 2 LED	•	•	•	•	•
Chromotherapy	Op. 1 LED	Op. 1 LED	Op. 1 LED	Op. 4 LED	Op. 1 LED	Op. 1 LED
Isothermal cover	Op.	Op.	Op.	Op.	Op.	Op.
Recommended compact kit	Kit 75 2M	Kit 75 2M	Kit 50 or 75	Kit 75 3M	Kit 75 2M	Kit 50 or 75

				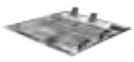			
MODELS	**Mirage 40**	**Vulcano**	**Mercurio**	**Minerva**	**Venus**	**Neptuno**	**Zeus**
	44630	**43723**	**71470**	**71472**	**46027**	**71473**	**71474**
Size cm (± 2 cm)	Ø 250	Ø 230	268 x 230	205 x 205	211 x 211	254 x 220	408 x 210
Positions (Seats / Loungers)	6 (6 / -)	6 (6 / -)	4 (2 / 2)	4 (2 / 2)	4 (4 / 4)	5 (5 / -)	7 (5 / 2)
Water capacity (litres)	1,410 l	1,300 l	2,000 l	1,200 l	1,230 l	1,200 l	2,650 l
Spa weight Empty	353 kg	350 kg	500 kg	650 kg	325 kg	400 kg	650 Kg
Spa weight Full	1,763 kg	1,650 kg	2,000 kg	1,850 kg	1,560 kg	1,600 kg	3,300 Kg
Mosaic	•	-	-	-	-	-	
Colours	All	Stainless steel		Stainless steel			
No of jets	26	12	12	28	20	23	25
No of air nozzles	12	Equiv. to 15 nozzles	Equiv. to 32 nozzles	28	16	20	62
Headrests	-	-	•	2	2	-	•
Piezoelectric press buttons	2	•	•	2	2	2	3
High resistance metallic structure	•	•	•	•	•	•	•
Projector	•	•	•	5	4	3	2
Chromotherapy	Op. 1 LED	as standard	as standard	as standard	as standard	as standard	as standard
Isothermal cover	Op.	Op.	Op.	Op.	-	Op.	Op.
Recommended compact kit	Kit 75 2M	Kit 75	Kit 75	16412	05135	16412	Send inquiry

We reserve the right to change, wholly or partially, the features of our products and the contents of this document, without prior notice

IN-GROUND OVERFLOW COMMERCIAL SPAS

Coliseum - Code 20141



COLOUR: BLUE MARBLE (46)



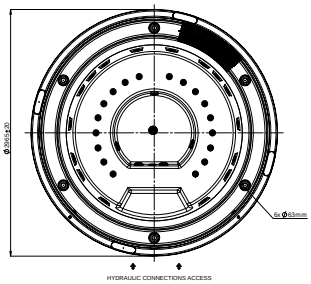

TECHNICAL SHEET	
Size in cm (± 2cm)	Ø 297 cm
Positions (Seats / Loungers)	10 (10 / -)
Jets + blower nozzles	16 + 18
Recommended compact kit	Kit 75 2M - Code 16412

Description	Code
COLISEUM + Light	**20141SE001**
COLISEUM + Light + Cover	**20141SE006**

Spa cover and balance tank sold separately.
See section "Spa accessories".

Fully fitted with overflow channel, main drain, filtering, hydromassage and blower nozzles, hydromassage buttons and overflow grating. Balance tank not included.

Roma - Code 40769



COLOUR: BLUE MARBLE (46)



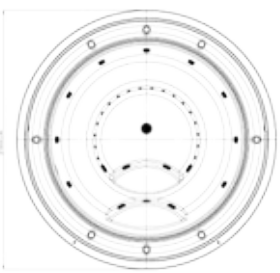

TECHNICAL SHEET	
Size in cm (± 2cm)	Ø 300 cm
Positions (Seats / Loungers)	9 (9 / -)
Jets + blower nozzles	18 + 18
Recommended compact kit	Kit 75 2M

Description	Code
ROMA + Light	**40769SE001**
ROMA + Light + Cover	**40769SE006**

Spa cover and balance tank sold separately.
See section "Spa accessories".

Fully fitted with overflow channel, main drain, filtering, hydromassage and blower nozzles, hydromassage buttons and overflow grating. Balance tank not included.

We reserve the right to change, wholly or partially, the features of our products and the contents of this document, without prior notice

IN-GROUND OVERFLOW COMMERCIAL SPAS

Verona - Code 70550



WHITE COLOUR (44)



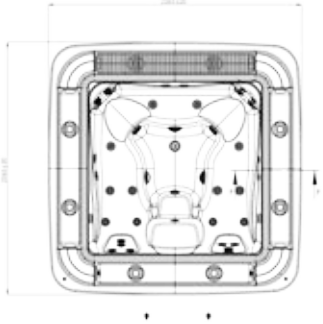

TECHNICAL SHEET	
Size in cm (± 2cm)	228 x 228 cm
Positions (Seats / Loungers)	5 (3 / 2)
Jets + blower nozzles	24 + 12
Recommended compact kit	Kit 50 or 75

Description	Code
VERONA + Light	**70550SE001**
VERONA + Light + Cover	**70550SE006**

Spa cover and balance tank sold separately. See section "Spa accessories".

Fully fitted with overflow channel, main drain, filtering, hydromassage and blower nozzles, hydromassage buttons and overflow grating. Balance tank not included.

Tokyo 70 - Code 53990

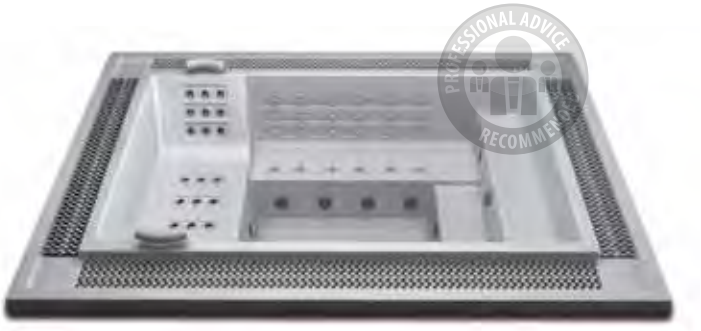

WHITE COLOUR (44)



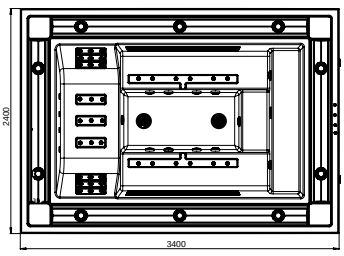

TECHNICAL SHEET	
Dimensions in cm (± 2cm)	340 x 240 cm
Positions (Seats / Loungers)	7 (6 / 1)
Jets + nozzles	58 + 21
Recommended compact kit	Kit 75 3M - Code 43639

Available colours: White / Blue Marble.

Description	Code
TOKYO 70 + Light	**53990SE315**
TOKYO 70 + Light + Cover	**53990SE316**
TOKYO 70 Plus + Light + Cascade	**53993SE315**
TOKYO 70 Plus + Light + Cascade + Cover	**53993SE316**

Spa cover and balance tank sold separately. See section "Spa accessories".

Fully fitted with overflow channel, main drain, filtering, hydromassage and blower nozzles, hydromassage buttons and overflow grating. Balance tank not included.

We reserve the right to change, wholly or partially, the features of our products and the contents of this document, without prior notice

IN-GROUND OVERFLOW COMMERCIAL SPAS

Olympia - Code 73587

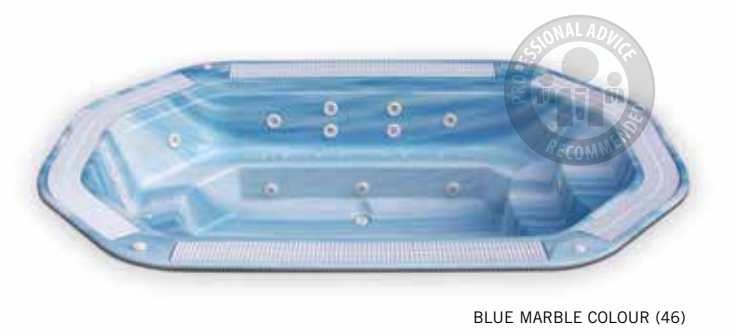

BLUE MARBLE COLOUR (46)



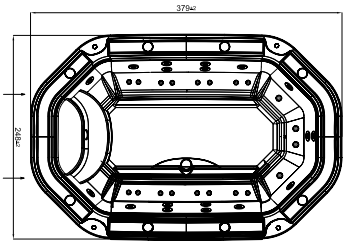

TECHNICAL SHEET	
Size in cm (± 2cm)	379 x 249 cm
Positions (Seats / Loungers)	11 (11 / -)
Jets + nozzles	16 + 20
Recommended compact kit	Kit 75 2M - Code 16412

This Spa is only available in colours 44 and 46.

Description	Code
OLYMPIA + Light	**73587SE001**
OLYMPIA + Light + Cover	**73587SE006**

Spa cover and balance tank sold separately.
See section "Spa accessories".

Fully fitted with overflow channel, main drain, filtering, hydromassage and blower nozzles, hydromassage buttons and overflow grating. Balance tank not included.

Odisea 20 - Code 45709



White COLOUR (44)



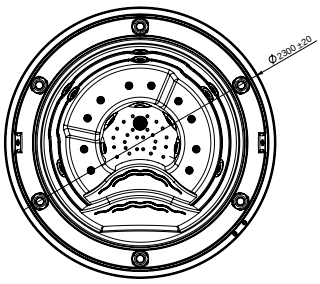

TECHNICAL SHEET	
Size in cm (± 2cm)	Ø 230 cm
Positions (Seats / Loungers)	5 (5 / -)
Jets + nozzles	8 + 10
Recommended compact kit	Kit 50 - Code 04015 / Kit 75 - Code 05135

Description	Code
ODISEA 20 + Light	**45709SP001**
ODISEA 20 + Light + Cover	**45709SP006**

Spa cover and balance tank sold separately.
See section "Spa accessories".

Fully fitted with overflow channel, main drain, filtering, hydromassage and blower nozzles, hydromassage buttons and overflow grating. Balance tank not included.

We reserve the right to change, wholly or partially, the features of our products and the contents of this document, without prior notice

IN-GROUND OVERFLOW COMMERCIAL SPAS

Mirage 40 - Code 44630

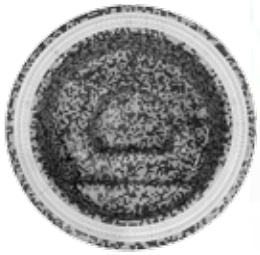



Description	Code
MIRAGE 40 + Stainless steel jets + Colour LEDs + press buttons	**44630SP315**
MIRAGE 40 + Stainless steel jets + Colour LEDs + press buttons + Cover	**44630SP316**

Spa cover and balance tank sold separately.
See section "Spa accessories".

TECHNICAL SHEET	
Size in cm (± 2cm)	Ø 250 cm
Positions (Seats / Loungers)	6 (6 / -)
Jets + nozzles	26 + 12
Recommended compact kit	Kit 75 2M - Code 16412

Available colours:


AG13


AG20


AG02


AG72


AG34


AG75


AG64


AG70

Fully fitted with overflow channel, main drain, filtering, hydromassage and blower nozzles, hydromassage buttons and overflow grating. Balance tank not included.

We reserve the right to change, wholly or partially, the features of our products and the contents of this document, without prior notice

STAINLESS STEEL PUBLIC SPAS WITH OVERFLOW CHANNEL

Vulcano - Code 43723





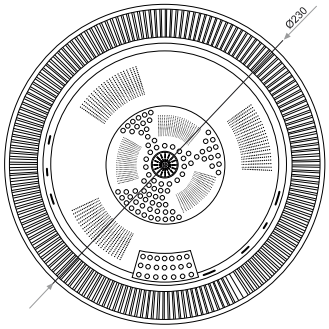

TECHNICAL SHEET	
Dimensions in cm (± 1cm)	Ø 230 x 90
Positions (Seats / Loungers)	6 (6 / -)
Jets + nozzles	12 + 15
Recommended compact kit	Kit 75 - Code 05135

Description	Code
VULCANO circular stainless steel SPA + Spotlight	**43723**

Spa cover and balance tank sold separately.
See section "Spa accessories".

Equipped with overflow channel, main drain, hydromassage push buttons, and filtration, hydromassage and blower nozzles. Buffer tank not included.

Mercurio - Code 71470





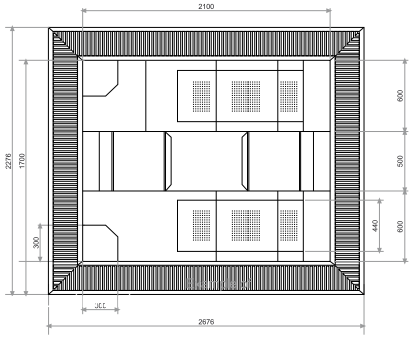

TECHNICAL SHEET	
Dimensions in cm (± 1cm)	268 x 230 x 90
Positions (Seats / Loungers)	4 (2 / 2)
Jets + nozzles	12 + 29
Recommended compact kit	Kit 75 - Code 05135

Description	Code
MERCURIO Rectangular Stainless steel SPA + Spotlight	**71470**

Spa cover and balance tank sold separately.
See section "Spa accessories".

Equipped with overflow channel, main drain, hydromassage push buttons, and filtration, hydromassage and blower nozzles. Buffer tank not included.

Ask for your new **Spa & Pool INOX SOLUTION** catalogue by AstralPool



STAINLESS STEEL PUBLIC SPAS WITH OVERFLOW CHANNEL

Minerva - Code 71472

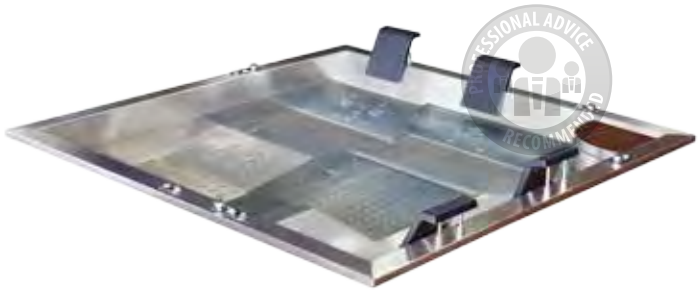

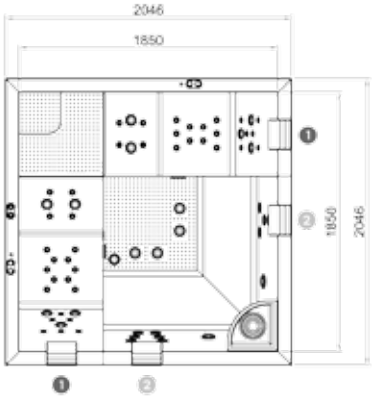

TECHNICAL SHEET	
Dimensions in cm (± 1cm)	205 x 205 x 90,5
Positions (Seats / Loungers)	4 (2 / 2)
Jets + nozzles	2 + 29
Recommended compact kit	Kit 75 - Code 05135

Description	Code
MINERVA Design Stainless steel SPA + Spotlight	**71472**

Spa cover and balance tank sold separately.
See section "Spa accessories".

Equipped with overflow channel, main drain, hydromassage push buttons, and filtration, hydromassage and blower nozzles. Buffer tank not included.

Venus - Code 46027

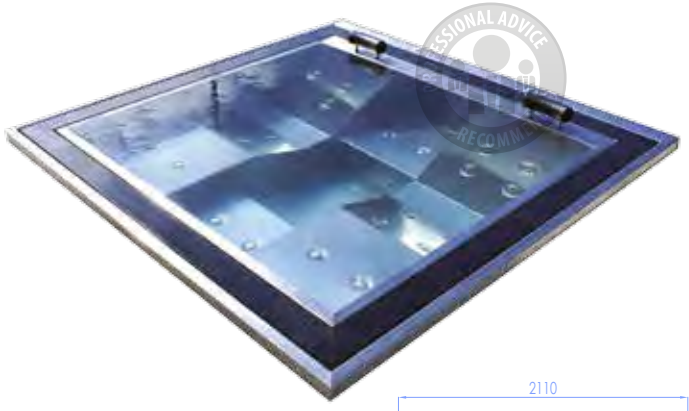



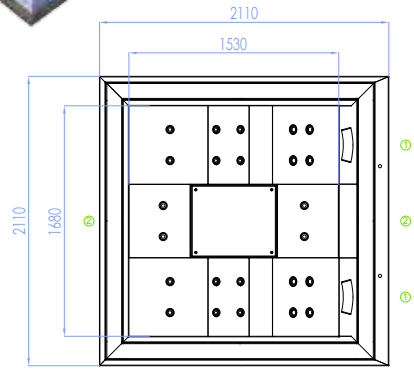

TECHNICAL SHEET	
Dimensions in cm (± 1cm)	211 x 211 x 90
Positions (Seats / Loungers)	4 (4 / 4)
Jets + nozzles	20 + 16
Recommended compact kit	Kit 75 - Code 05135

Description	Code
VENUS Rectangular Stainless steel SPA + Spotlight	**46027**

Spa cover and balance tank sold separately.
See section "Spa accessories".

Equipped with overflow channel, main drain, hydromassage push buttons, and filtration, hydromassage and blower nozzles. Buffer tank not included.

Ask for your new **Spa & Pool INOX SOLUTION** catalogue by AstralPool



STAINLESS STEEL PUBLIC SPAS

Neptuno - Code 71473



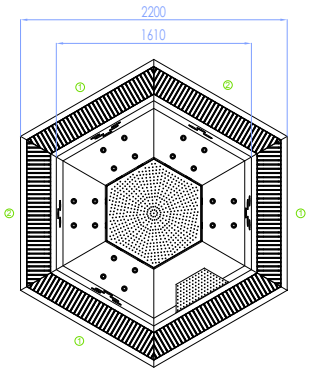

TECHNICAL SHEET	
Dimensions in cm (± 1cm)	254 x 220 x 100
Positions (Seats / Loungers)	5 (5 / -)
Jets + nozzles	23 + 20
Recommended compact kit	16412

Description	Code
NEPTUNO Design Stainless steel SPA + Spotlight	**71473**

Spa cover and balance tank sold separately.
See section "Spa accessories".

Equipped with overflow channel, main drain, hydromassage push buttons, and filtration, hydromassage and blower nozzles. Buffer tank not included.

Zeus - Code 71474

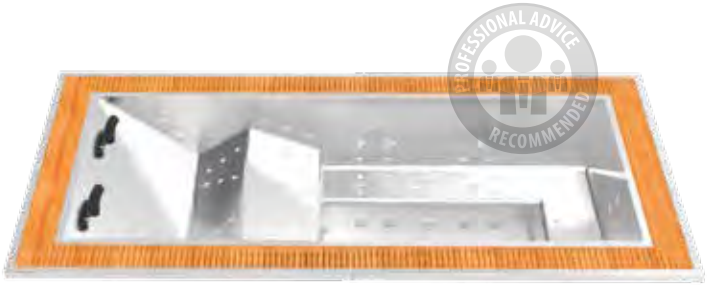

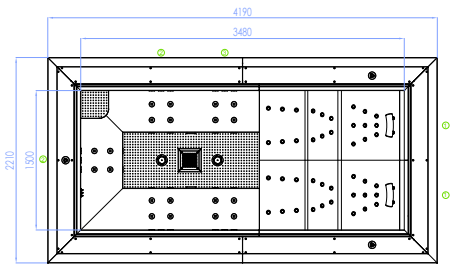

TECHNICAL SHEET	
Dimensions in cm (± 1cm)	348 x 150 x 98
Positions (Seats / Loungers)	7 (5 / 2)
Jets + nozzles	25 + 62
Recommended compact kit	Send inquiry

Description	Code
ZEUS Rectangular Stainless steel SPA + Spotlight	**71474**

Spa cover and balance tank sold separately.
See section "Spa accessories".

Equipped with overflow channel, main drain, hydromassage push buttons, and filtration, hydromassage and blower nozzles. Buffer tank not included.

Ask for your new **Spa & Pool INOX SOLUTION** catalogue by AstralPool



COMPACT FILTRATION FOR SPAS

Compact kits for public use



16412



04015

Preassembled for filtering, heating and massage.
All kits are fitted with the electronic control cabinet operated using piezoelectric switches.

	04015CE000	04015CE001	04015CE004	05135CE000	05135CE001	05135CE004	16412CE000	16412CE001	16412CE004	43639CE001	43639CE004
Spa Model	Odisea 20, Verona			Odisea 20, Verona			Roma, Coliseum, Olympia, Mirage 40			Tokyo 70	
Compact weight (with assembly)	114 kg			94 kg			116 kg			134 kg	
Filter weight (with assembly)	Included			85 kg			85 kg			85 kg	
Assembly volume compact kit	1.39 m^3			1.39 m^3			1.39 m^3			1.39 m^3	
Volume with filter	-			0.83 m^3			0.83 m^3			0.83 m^3	
Filter Ø	Ø 500 mm			Ø 650 mm			Ø 650 mm			Ø 650 mm	
Filter pump	0.60 kW			0.82 kW			0.82 kW			0.82 kW	
Filter pump flow rate	10000 l/h			11000 l/h			11000 l/h			11000 l/h	
Massage pump	1.40 kW			1.40 kW			2 x 1.81 kW			2 x 1.81 kW + 1 x 2.70 kW	
Blower pump	1.3 kW			1.3 kW			1.3 kW			1.3 kW	
Electric heater	6 kW		-	6 kW		-	6 kW		-	6 kW	-
Voltage	400 AC III + N			400 AC III + N			400 AC III + N			400 AC III + N	
Power requirements	9362 W (18.1 A)		3350 W (5.6 A)	9582 W (19.2 A)		3570W (6 A)	11802 W (23 A)		5790 W (9.7 A)	14485 W (27.5 A)	8473 W (14.2 A)
Kit size without assembly (PrxAnxAl)	1160 x 1000 x 1200 mm			1160 x 1000 x 1200 mm			1160 x 1000 x 1200 mm			1160 x 1000 x 1200 mm	
Ozone		•			•			•		•	
Water-water exchanger 20 kW			•			•			•		•

We reserve the right to change, wholly or partially, the features of our products and the contents of this document, without prior notice

COMPLEMENTS FOR SPAS



Covers for spas

	Code	Standard Pack	Standard Weight in kg	Standard Volume in m³
ODISEA 20 / Infinity spa cover	**45721**	1	20	0.25
COLISEUM spa cover	**28298**	1	18	0.86
OLYMPIA spa cover	**43817**	1	15	0.44
MIRAGE spa cover	**41892**	1	15	0.44
TOKYO spa cover	**54184**	1	-	-
VERONA spa cover	**71994**	1	18	0,86
ROMA spa cover	**62402**	1	18	0,86



Cover Stand

Metal Stand for simple handling of the cover.

Code	Standard Pack	Standard Weight in kg	Standard Volume in m³
28462	1	10	0.118

Spa access steps

	Code	Standard Pack	Standard Weight in kg	Standard Volume in m³
Synthetic wood staircase in Graphite	**42002CL0K**	1	15	0.09
Basic staircase coastal grey	**60194**	1	5	0.07
Swimspa staircase	**56918CL01**	1	35	0.59
Synthetic wood staircase in Thunder	**42002CL0R**	1	15	0.09
Synthetic wood staircase in Creek	**42002CL0T**	1	15	0.09
Synthetic wood staircase in Butterfly	**42002CL0W**	1	15	0.09



42002CL0K



60194



56918CL01

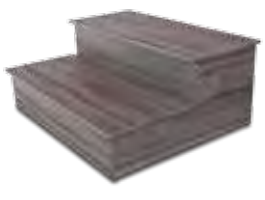

42002CL0R



42002CL0W

COMPLEMENTS FOR SPAS



Spa parasol in Cameo with LED

	Code	Standard Pack	Standard Weight in kg	Standard Volume in m^3
Spa parasol in Cameo with LED	**60220**	2	15	2



Portable spa handrail holder

	Code	Standard Pack	Standard Weight in kg	Standard Volume in m^3
Portable spa handrail holder	**60226**	2	8	0.95



Spa filter cartridge cleaner

	Code	Standard Pack	Standard Weight in kg	Standard Volume in m^3
Spa filter cartridge cleaner	**60197**	1	2	0.04



Polyester balance tank

Used for collecting water volume displaced in overflow channel of commercial spas

	Code	Standard Pack	Standard Weight in kg	Standard Volume in m^3
1000 litres capacity (162 x 122 x 83 cm)	**11372**	1	10.0	1.75
2000 litres capacity (204 x 160 x 75 cm)	**27865**	1	15.0	3.81



PE balance tank

1000 litres capacity. Used for collecting water volume displaced in overflow channel of commercial spas.

	Code	Standard Pack	Standard Weight in kg	Standard Volume in m^3
158 x 92 x 95 cm	**17144**	1	10.0	1.75

Different compensation vessel capacities depending on model:

Code	Balance tank	Spa model
11372	1000 litre polyester tank	Casiopea, Formentera, Venecia, Coliseum, Odisea 20, Mirage 40
17144	1000 litre polyethylene tank	
27865	2000 litre polyester tank	Olympia, Wellmax, Casiopea, Formentera, Venecia, Coliseum, Odisea 20, Mirage 40

LINER ACCESSORIES



2 ½" adjustable jet

Regulates proportion of air-water outlet. 50 mm diameter water inlet and 32 mm air inlet. Flow: 4 m³/hour. Pressure 0.8 a.t.m.

Code	Standard Pack	Standard Weight in kg	Standard Volume in m³
32641	12	7.625	0.028



2" threaded jet

Water inlet diameter of 50 mm and air inlet diameter of 32 mm. Flow rate of 4 m³/hour. Atm pressure of 0.8.

Code	Standard Pack	Standard Weight in kg	Standard Volume in m³
33586	12	7.625	0.028



2" jet thread for liner

Water inlet diameter of 50 mm and air inlet diameter of 32 mm. Flow rate of 4 m³/hour Atm pressure of 0.8.

Code	Standard Pack	Standard Weight in kg	Standard Volume in m³
70532	12	7.625	0.028



2" main drain

With elbow for gluing to Ø 50 mm pipe.

Code	Standard Pack	Standard Weight in kg	Standard Volume in m³
04042	15	4.8	0.028



Adjustable air inlet

1"for air regulation to Venturi system for jet function.

Code	Standard Pack	Standard Weight in kg	Standard Volume in m³
04045	25	6.0	0.028



Adjustable silent air inlet

Silent venturi for jet air flow control. Air intake is through embedded part. Attaches to air distributor code 33937.

Code	Standard Pack	Standard Weight in kg	Standard Volume in m³
33938	25	8.5	0.028

LINER ACCESSORIES



5 outlet air distributor for venturi

5 outlet air distributor for gluing to venturi with code 33938. Outlets for clamping a flexible hosepipe of 10 mm inner diameter.

Code	Standard Pack	Standard Weight in kg	Standard Volume in m^3
33937	25	8.5	0.028



6 outlet air distributor for venturi

6 outlet air distributor to attach to pipes with a 10 mm inner diameter and glue to 15 mm pipes.

Code	Standard Pack	Standard Weight in kg	Standard Volume in m^3
33936	25	8.5	0.028



10 outlet air distributor

10 outlet air distributor to attach to pipes with a 10 mm inner diameter and glue to 50 mm pipes.

Code	Standard Pack	Standard Weight in kg	Standard Volume in m^3
35346	25	8.5	0.028



4 water outlet manifold

Manifold for gluing to 50 mm pipe, 4 outlets for clamping a hosepipe of 20 mm inner diameter.

Code	Standard Pack	Standard Weight in kg	Standard Volume in m^3
33934	25	8.5	0.028



8 water outlet manifold

Manifold for gluing to 50 mm pipe, 8 outlets for clamping a hosepipe of 20 mm inner diameter.

Code	Standard Pack	Standard Weight in kg	Standard Volume in m^3
33935	25	8.5	0.028



Threaded blower nozzle

For air distribution into the SPA from the blowers. Flow rate 5.4 to 7.5 m^3/h.

	Code	Standard Pack	Standard Weight in kg	Standard Volume in m^3
White plastic front panel	**27602**	80	1.6	0.03
Stainless steel front panel	**43440**	80	1.6	0.03

LINER ACCESSORIES



Blower nozzle for gluing

For air distribution into the SPA from the blowers. Flow rate 5.4 to 7.5 m³/h.

	Code	Standard Pack	Standard Weight in kg	Standard Volume in m³
White plastic front panel	**28460**	80	1.6	0.03
Stainless steel front panel	**43441**	80	1.6	0.03



Blower nozzle lateral outlet 3/8"

For air distribution into the SPA from the blowers. Flow rate 5.4 to 7.5 m³/h.

	Code	Standard Pack	Standard Weight in kg	Standard Volume in m³
White plastic front panel	**34318**	80	1.6	0.03
Stainless steel front panel	**43442**	80	1.6	0.03



2" return unit

For return line and massage.

Code	Standard Pack	Standard Weight in kg	Standard Volume in m³
04034	25	5.0	0.028



Adjustable air impulsion inlet

For air distribution by means of the blowers. Maximum flow rate 18 m³/h.

Code	Standard Pack	Standard Weight in kg	Standard Volume in m³
49818	12	4.24	0.021

09667 **04047**



04048

Pneumatic push button

For starting and stopping massage and hydromassage functions.

	Code	Standard Pack	Standard Weight in kg	Standard Volume in m³
For max. 15 m	**04047**	20	0.5	0.028
For max. 7 m simple	**04048**	40	1.6	0.028
For max. 7 m simple, with thread	**09667**	20	0.5	0.028

Plastic tube

For pneumatic signal from press button to switch. Inner Ø 3.5 mm.

Code	Standard Pack	Standard Weight in kg	Standard Volume in m³
04054	50	3.33	0.006

LINER ACCESSORIES



Rotating jet

Flow rate 2 to 2.5 m³/h.

Code	Standard Pack	Standard Weight in kg	Standard Volume in m³
20297	25	3.33	0.028



Twin rotating jet

Flow rate 2 to 2.5 m³/h.

Code	Standard Pack	Standard Weight in kg	Standard Volume in m³
20296	25	3.83	0.028



Rotating jet housing

Code	Standard Pack	Standard Weight in kg	Standard Volume in m³
20299	15	3.33	0.028



Jet housing for linear pool

Code	Standard Pack	Standard Weight in kg	Standard Volume in m³
63144	12	3.33	0.028



Moveable tube jet nozzle to install in substitution of a fixed one

Compatible with codes 20295 and 20299. Flow rate 2 to 2.5 m³/h.

Code	Standard Pack	Standard Weight in kg	Standard Volume in m³
20298	1	0.8	0.001



2 ½" wall conduit for rotating jet

Made up of: The jet body, 20 cm wall conduit, niche, threaded fitting, front body. Jet not included.
Flow rate 5 m³/h at 1 bar.

Code	Standard Pack	Standard Weight in kg	Standard Volume in m³
20295	4	4	0.018

Stainless steel accessories should not be used in pools with salt electrolysis systems

POOL JET ACCESSORIES

Pool Jet accessories are designed for pools that have a hydromassage section .



Pool Jet 1 Directional Jet

Flow rate 2.4 to 3.6 m³/h. Accessories compatible with 2½" handrail for Pool Jet.

	Code	Standard Pack	Standard Weight in kg	Standard Volume in m³
Stainless steel finish*	**63148**	25	3.83	0.028
White finish	**63149**	25	3.83	0.028



Pool Jet 1 Rotating Jet

Flow rate 2.4 to 3.6 m³/h. Accessories compatible with 2½" handrail for Pool Jet.

	Code	Standard Pack	Standard Weight in kg	Standard Volume in m³
Stainless steel finish*	**63150**	25	3.83	0.028
White finish	**63151**	25	3.83	0.028



Pool Jet 2 Rotating Jets

Flow rate 2.4 to 3.6 m³/h. Accessories compatible with 2½" handrail for Pool Jet.

	Code	Standard Pack	Standard Weight in kg	Standard Volume in m³
Stainless steel finish*	**63152**	25	3.83	0.028
White finish	**63153**	25	3.83	0.028



Pool Jet Rotating Beehive

Flow rate 2.4 to 3.6 m³/h. Accessories compatible with 2½" handrail for Pool Jet.

	Code	Standard Pack	Standard Weight in kg	Standard Volume in m³
Stainless steel finish*	**63154**	25	3.83	0.028
White finish	**63155**	25	3.83	0.028



Wall conduit for Pool Jet

Made up of: The jet Straight body (20 mm Air x 32 mm Water), 20 cm wall conduit, niche, front body. Jet not included.

	Code	Standard Pack	Standard Weight in kg	Standard Volume in m³
Wall conduit for Pool Jet	**63146**	4	4	0.018

Chrome accessories suitable only for baths that use no chemical treatment. Not suitable for pools.

ACCESSORIES FOR MINISPAS



1 ½" main drain

With elbow for gluing Ø 50 mm pipe.

	Code	Standard Pack	Standard Weight in kg	Standard Volume in m³
Chrome-plated bronze front panel	**04104**	3	7.5	0.028



Adjustable air inlet

¾" to control air massage to Venturi system for jet function

	Code	Standard Pack	Standard Weight in kg	Standard Volume in m³
Chrome-plated bronze front panel	**04108**	10	9.0	0.028
White plastic front panel	**04110**	10	3.0	0.028



Pneumatic push button

For starting and stopping massage and hydromassage functions.

	Code	Standard Pack	Standard Weight in kg	Standard Volume in m³
Chrome-plated bronze front panel	**04111**	10	6.0	0.028
White plastic front panel	**04113**	12	6.0	0.028



Blower Inlet

For minispa air distribution from the blower. 1 ½" thread.

	Code	Standard Pack	Standard Weight in kg	Standard Volume in m³
Chrome-plated bronze front panel	**04114**	20	7.5	0.028



1 ¼" jet with adaptor to water return

Jet with adaptor to return water to pipe. Also adaptor to connect to water return and air circulation pipe, solvent for inner Ø 32 mm, directional.

	Code	Standard Pack	Standard Weight in kg	Standard Volume in m³
Chrome-plated bronze front panel	**04095**	8	12.0	0.028
White plastic front panel	**04097**	12	12.0	0.028



1¼" jet

With adaptor to connect to return water pipe and Venturi to glue to Ø 32 mm pipe, directional.

	Code	Standard Pack	Standard Weight in kg	Standard Volume in m³
Chrome-plated bronze front panel	**04092**	8	10.0	0.028
White plastic front panel	**04094**	24	5.0	0.028



1 ¼" return inlet

	Code	Standard Pack	Standard Weight in kg	Standard Volume in m³
Built in chrome brass	**04100**	4	15.0	0.028
Built in white plastic	**04103**	12	3.5	0.028

ELECTRICAL ACCESSORIES FOR SPAS / MINI SPAS



Programmable digital thermostat

To operate ON/OFF contactor.

Code	Standard Pack	Standard Weight in kg	Standard Volume in m^3
11288	20	0.5	0.003



Electric press button

230 V 50 Hz.

Code	Standard Pack	Standard Weight in kg	Standard Volume in m^3
33387	1	1.5	0.003



Electropneumatic equipment

With two switches. Up to 1.47 kW (2HP).

Code	Standard Pack	Standard Weight in kg	Standard Volume in m^3
04053	2	4.0	0.028



Pneumatic switch

For starting and stopping massage and hydromassage functions.

	Code	Standard Pack	Standard Weight in kg	Standard Volume in m^3
Pneumatic switch	**04050**	25	1.0	0.028
Pneumatic switch and presostat	**11290**	6	0.5	0.028
Pneumatic presostat	**11291**	12	1.0	0.028

AIR BLOWERS



Continuous operation lateral turbo blower pump

Air pump designed for spas, baths, hydromassage installations and similar which produces a constant stream of air bubbles at medium and high air volume levels. It can also be used to stir up the filter bed, for example in back wash cycles where a low intensity air current is required.

The filter casing and impeller are made from an injected aluminium alloy whilst the motor spindle is manufactured from stainless steel, with the impeller dynamically balanced and directly adapted to the spindle. The motors, single phase or 3 phase for continuous use, are made from steel in compliance with CEI 2/3 1988 regulations, and feature IP54 external protection and class-F insulation. The standard voltages are100-120/200-240V for the monophase range and 200-240/380-440V for the triphase models, at 50/60Hz. The pumps can be mounted horizontally or vertically. Moreover, since there is no contact between the mobile parts and the pump static discharges, neither lubrication nor maintenance is necessary and it does not cause wear on the parts.

The turbines have a maximum working temperature of 40ºC. Do not use in conjunction with aggressive, inflammable or explosive gases.

Model	Code	Frequency (Hz)	Power supply (V)	Phase	Flow rate (m^3/h)	Maximum pressure (mbar)	Standard weight (kg)	Standard volume (m^3)
Blower 0.4 kW	**33970**	50	Δ 200-240 Y 345-415	3	80	130	10	0.045
Blower 0.5 kW		60	Δ 220-275 Y 380-480	3	98	170		
Blower 0.85 kW	**35388**	50	200-240	1	145	160	17	0.059
Blower 0.95 kW		60	200-240	1	175	160		
Blower 0.85 kW	**35387**	50	Δ 200-240 Y 345-415	3	145	160	16	0.045
Blower 0.95 kW		60	Δ 220-275 Y 380-480	3	175	160		
Blower 1.3 kW	**31090**	50	200-240	1	210	170	23	0.059
Blower 1.5 kW		60	200-240	1	255	140		
Blower 1.3 kW	**31091**	50	Δ 200-240 Y 345-415	3	210	170	22	0.059
Blower 1.5 kW		60	Δ 220-275 Y 380-480	3	255	140		
Blower 1.5 kW	**33971**	50	200-240	1	210	220	24	0.064
Blower 1.75 kW		60	200-240	1	255	220		
Blower 1.6 kW	**31092**	50	Δ 200-240 Y 345-415	3	210	220	23	0.064
Blower 2.1 kW		60	Δ 220-275 Y 380-480	3	255	220		
Blower 1.6 kW 2V	**35389**	50	Δ 200-240 Y 345-415	3	150	300	25	0.087
Blower 2.06 kW 2V		60	Δ 220-275 Y 380-480	3	180	310		
Blower 2.2 kW	**31093**	50	Δ 200-240 Y 345-415	3	318	230	30	0.097
Blower 2.55 kW		60	Δ 220-275 Y 380-480	3	376	220		
Blower 3.0 kW 2V	**31094**	50	Δ 200-240 Y 345-415	3	230	410	40	0.126
Blower 3.45 kW 2V		60	Δ 220-275 Y 380-480	3	275	400		
Blower 3.0 kW	**31095**	50	Δ 200-240 Y 345-415	3	318	280	36	0.097
Blower 3.45 kW		60	Δ 220-275 Y 380-480	3	376	280		
Blower 4.3 kW 2V	**31096**	50	Δ 345-415 Y 600-720	3	520	600	54	0.217
Blower 4.8 kW 2V		60	Δ 380-480 Y 660-720	3	385	320		
Blower 5.5 kW	**31097**	50	Δ 345-415 Y 600-720	3	530	320	63	0.16
Blower 6.3 kW		60	Δ 380-480 Y 660-720	3	620	340		
Blower 5.5 kW 2V	**33972**	50	Δ 345-415 Y 600-720	3	320	515	66	0.201
Blower 6.3 kW 2V		60	Δ 380-480 Y 660-720	3	385	530		
Blower 7.5 kW	**31098**	50	Δ 345-415 Y 600-720	3	530	400	66	0.16
Blower 8.6 kW		60	Δ 380-480 Y 660-720	3	620	400		
Blower 11 kW 2V	**33973**	50	Δ 345-415 Y 600-720	3	520	600	104	0.353
Blower 12.6 kW 2V		60	Δ 380-480 Y 660-720	3	620	600		
Blower 12.5 kW	**33974**	50	Δ 345-415 Y 600-720	3	1050	270	116	0.353
Blower 14.5 kW		60	Δ 380-480 Y 660-720	3	1250	260		



Intermittent operation air blower, 900 W

	Code	Standard Pack	Standard Weight in kg	Standard Volume in m^3
0.90 kW flow 54 m^3/h at 1.5 m water head	**19289**	1	3.5	0.028

AIR BLOWERS



Water pump

ABS (25%) and fibreglass (75%) housing. A 0.37 kW (0.5 hp) motor. IP-55 electrical connection rating of 24 V 220 V 1~ 50Hz . 2" male suction connection. 1½" male return connection.

TECHNICAL DETAILS

Water head	m³/h
2	16.5
4	14.8
6	12.6
8	10
10	7

Code	Standard Pack	Standard Weight in kg	Standard Volume in m³
04091	1	6.0	0.016



Intermittent operation air blower

	Code	Standard Pack	Standard Weight in kg	Standard Volume in m³
0.74 kW, Flow 65 m³/h at 1 m water head	**06862**	1	3.5	0.028
1.10 kW, Flow 133 m³/h at 1 m water head	**06863**	1	3.5	0.028





Cala Pump

Centrifugal pump for spas, backwashes and other applications.

- Pump body manufactured in polypropylene reinforced with fibreglass, resistant to pool chemical products thus guaranteeing long and excellent duration.
- Turbine in Noryl.
- Graphite and ceramic mechanical seal.
- AISI 316L stainless steel motor spindle.
- Enclosed motor, completely silent, with IP-55 protection at 2850 r.p.m. Single phase power voltage at 230V-50Hz or triphase at 230/400-50Hz.
- Versions from 1.5 to 4.5 HP.
- Suction and return connections for gluing hoses included with the pump.
- Suction and return at Ø63.

	Code	Standard Pack	Standard Weight in kg	Standard Volume in m³
Single phase 1.1 kW Cala Pump	**CA150M**	1	15.0	0.058
Tri phase 1.1 kW Cala Pump	**CA150T**	1	15.0	0.058
Single phase 1.5 kW Cala Pump	**CA200M**	1	16.5	0.058
Tri phase 1.5 kW Cala Pump	**CA200T**	1	16.5	0.058
Single phase 2.2 kW Cala Pump	**CA300M**	1	19.5	0.058
Tri phase 2.2 kW Cala Pump	**CA300T**	1	19.5	0.058
Single phase 2.9 kW Cala Pump	**CA400M**	1	22.5	0.058
Tri phase 3.3 kW Cala Pump	**CA450T**	1	22.5	0.058

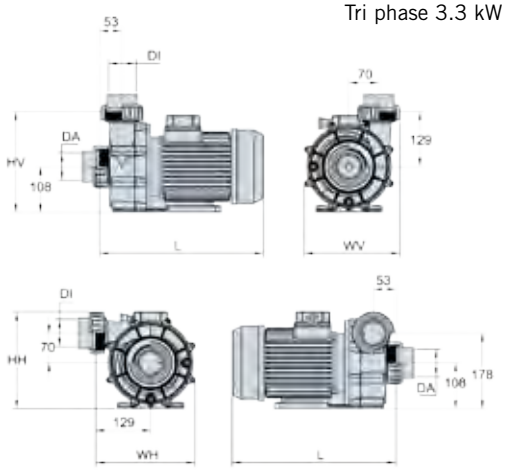

Code	Power		Size						
	kW	HP	L	WV	HV	WH	HH	DA	DI
CA150M	1.1	1.5	350	225	237	235	228	Ø63	Ø63
CA150T									
CA200M	1.5	2.0	365	225	237	235	228	Ø63	Ø63
CA200T									
CA300M	2.2	3.0	385	225	237	235	228	Ø63	Ø63
CA300T									
CA400M	2.9	4.0	415	225	237	235	228	Ø63	Ø63
CA450T	3.3	4.5							

SAUNAS



Essentia sauna

Essentia sauna reflects precise lines, creativity and care of details and exclusive natural woods. It merges perfectly the nordic tradition with the Italian design and accurate balanced proportions. This sauna provides perfect finishing that makes it suitable to fit into luxury wellness areas. This sauna have:

- Wall panels of Thermo Magnolia wood 15 x 170 mm.
- Benches of thermos Magnolia wood 28 mm.
- Exclusive Harvia heater with touch control panel.
- Secured transparent glass 8 mm.
- Monomaterical surfaces.
- LED White/RGB.

Code	Type	Dimensions (cm)	Heating (kW)	Control unit
72892	Essentia sauna	200 x 200 x 239	7 kW 230/400V 3~	Touchscreen / Exterior
72893	Essentia sauna	250 x 200 x 239	7 kW 230/400V 3~	Touchscreen / Exterior
72894	Essentia sauna	250 x 250 x 239	10.8 kW 230/400V 3~	Touchscreen / Exterior
72895	Essentia sauna	300 x 250 x 239	10.8 kW 230/400V 3~	Touchscreen / Exterior

The Essentia sauna can be made to order in the following Woods:

- Standard wood: Thermo Magnolia.
- Optional: Thermo Aspen.
- Bench wood: Thermo Magnolia (optional: Thermo Aspen).

Accessories	Code	Unit	Standard Weight in kg	Standard Volume in m^3
Stainless Steel accessories set	**70443**	un.	-	-
RGB Led lighting kit with remote control	**70445**	un.	-	-
Outside Wall finished with vertical timber panels	**70447**	Lin. m	-	-
Window bronze/transparent	**70449**	Sq. m	-	-
Aroma dosing system	**70453**	un.	-	-



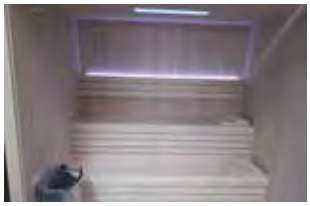

Salt generator mounted in separated room

The Innsbruck sauna can be made to order in the following woods:

- Standard wood: Red Cedar
- Optional: Nordic spruce / White pine / Thermo Aspen-Alder-Pine
- Bench wood: Abichi

Sanama sauna / Sanama Salt Room*

Sanama shows and exciting design that merge natural wood with salt element from Himalaya. Its perfect finishes and excellent details become this sauna in an essential high quality element that cannot be miss in a wellness area.

Sanama contains:

- Benches and back rests made of Abachi.
- Heater with touch screen control panel (*halogenerator as an option)
- S.S. bowl for salt elements.

Code	Type	Dimensions (cm)	Light	Control unit	Heating (kw)
65400S	Sanama	150 x 150 x 210	Led White / RGB	Touchscreen / Exterior	4.5 kW 230/400V 3~
65401S	Sanama	150 x 218 x 210	Led White / RGB	Touchscreen / Exterior	6 kW 230/400V 3~
65402S	Sanama	218 x 218 x 210	Led White / RGB	Touchscreen / Exterior	8 kW 230/400V 3~
65403S	Sanama	286 x 318 x 210	Led White / RGB	Touchscreen / Exterior	9 kW 230/400V 3~

Accessories	Code	Standard Pack	Standard Weight in kg	Standard Volume in m^3
Salt decorative elements set	**70444**	un.	-	-
Outside Wall dinished with vertical timber panels	**70447**	Lin.m	-	-
RGB Chromo therapy kit with remote control	**70457**	un.	-	-

* OPTIONAL: Halogenerator (insted of heater)

SAUNAS



The Bella sauna can be made to order in the following woods:
- Standard wood: Hemlock Playwood
- Bench wood: Thermo Aspen



Bella sauna

- Hemlock playwood panels 14 mm.
- Curved decorative elements of Thermo Aspen 21 mm.
- Benches of thermos Aspen 21 mm.
- Secured transparent glass 8 mm.
- Harvia design sauna heater.
- Outdoor touch control panel.
- Aromatherapy/Salt Metal Bowl.
- Led light warm white 3000 K.
- Option for glass ceiling.

Code	Dimensions (cm)	Light	Control Unit	Heater
72916	180 x 180 x 210	Led White / RGB	Touchscreen Exterior	6.9 kW 230 / 400 3~
72917	230 x 180 x 210	Led White / RGB	Touchscreen Exterior	6.9 kW 230 / 400 3~
72918	230 x 230 x 210	Led White / RGB	Touchscreen Exterior	10.5 kW 230 / 400 3~
72919	280 x 230 x 210	Led White / RGB	Touchscreen Exterior	10.5 kW 230 / 400 3~

Accessories	Code	Standard Pack	Standard Weight in kg	Standard Volume in m^3
Stainless steel accessories set	**70443**	un.	-	-
RGB Led lighting kit with remote control	**70445**	un.	-	-
Outside wall finished with vertical playwood panels	**To consult**	lin.m	-	-
Glass roof panel	**To consult**	sq.m	-	-
Heater safety railing	**To consult**	un.	-	-



The Lobos sauna can be made to order in the following woods:
- Standard wood: Hemlock Playwood
- Bench wood: Abichi

Lobos sauna

- Hemlock playwood panels 14 mm.
- Benches of Abachi 21 mm.
- Secured transparent glass 8 mm.
- Exclusive Harvia sauna heater.
- Outfoor touch control panel.
- Led light Warm White 3000 K.

Code	Dimensions (cm)	Light	Control Unit	Heater
72913	134 x 254 x 210	Led White / RGB	Touchscreen Exterior	6 kW 230 / 400 3~
72914	194 x 195 x 210	Led White / RGB	Touchscreen Exterior	8 kW 230 / 400 3~
72915	254 x 254 x 210	Led White / RGB	Touchscreen Exterior	9 kW 230 / 400 3~

Accessories	Code	Standard Pack	Standard Weight in kg	Standard Volume in m^3
Stainless steel accessories set	**70443**	un.	-	-
Salt decorative elements set	**70444**	un.	-	-
Remote control kit for RGB LED colours	**70445**	un.	-	-
Outside wall finished with vertical timber panels	**70447**	lin.m	-	-
Roof extension	**70448**	sq.m	-	-
Tintes/transparent glass window	**70449**	sq.m	-	-







FEEL THE PLEASURE OF BEAUTIFUL DESIGNS

Our goal is to take care for people's health and wellbeing. Therefore, our main objective in the wellness sector is to provide global value-add solutions that guarantee the well-being, health and comfort of users, regardless of the type of facility, its location or purpose.

In AstralPool we are artisans of wood. We adapt our designs to the project needs taking care of all kinds of details with the aim of achieving a high quality product.

Our planet is changing and it's changing fast. Manufacturing Saunas we want to protect the world's resources. We guarantee that all wood we use in our products grows back again.









STEAM BATHS





Lighting:
- Spots : 12V White LED
- Under bench: 12V RGB LED
- Ceiling: 12V RGB LED

Connection:
- 400 V III + Neutral + Grounding
- 230 V III + Grounding
- 230 V I + Neutral (9 Kw max.)

Asana steam bath cabin

New

Straight lines, sober and elegant design. AstralPool steam cabins offer the luxury of Italian design adapted to the most advanced technology in the market.

- Wall modules: Manufactured with double high density expanded polystyrene panel on an anodized aluminum structure.
- Ceiling: Vaulted ceiling made in black methacrylate modules of 3 mm, standing on anodized aluminium support, and tightenup with multicoated layers of polyester resin.
- Ceiling & underbench perimetral LED included.
- Diffuser in black lacquered.
- Lower and upper ring: Anodized aluminum.
- Handle: Tubular stainless steel matt black.
- Frontal finishing: laminated glass (5+5) of 10 mm.
- Benches coated with large format porcelain in slate black Sirius (Group 1).
- Walls coated with large format porcelain in marble black Kelya (Group 2).
- 2 puffs are included.
- Door: Made of tempered glass of 8 mm, hinges of anodized aluminium. Width 90 cm*.
- Control panel: Ecotouch
- Steam group included: Power according to model (optional: softener).
- Aromatherapy one essence included (optional up to 4 essences).

*Can vary according to customised design.

Code	Type	Dimensions (cm)	Heating (kW)	Control panel
73908	Asana steam bath cabin	200 x 200 x 220	9 kW	Ecotouch
73909	Asana steam bath cabin	250 x 200 x 220	9 kW	Ecotouch
73910	Asana steam bath cabin	250 x 250 x 220	12 kW	Ecotouch
73911	Asana steam bath cabin	300 x 250 x 220	12 kW	Ecotouch
73912	Asana steam bath cabin	300 x 300 x 220	12 kW	Ecotouch





Lighting:
- Spots : 12V White LED
- Under bench: 12V RGB LED
- Ceiling: 12V RGB LED

Connection:
- 400 V III + Neutral + Grounding
- 230 V III + Grounding
- 230 V I + Neutral (9 Kw max.)

Bandha steam bath cabin

New

Straight lines, sober and elegant design. AstralPool steam cabins offer the luxury of Italian design adapted to the most advanced technology in the market.

- Wall modules: Manufactured with double high density expanded polystyrene panel on an anodized aluminum structure.
- Ceiling: Vaulted ceiling made in wite methacrylate modules of 3 mm, standing on anodized aluminium support, and tightenup with multicoated layers of polyester resin.
- Ceiling & underbench perimetral LED included.
- Diffuser in Stainless Steel.
- Lower and upper ring: Anodized aluminum.
- Handle: Tubular stainless steel.
- Frontal finishing: laminated glass (5+5) of 10 mm.
- Benches coated with large format porcelain in sand color Gada (Group 0).
- Walls coated with large format porcelain in sand color Gada (Group 0).
- 2 puffs are influded.
- Sink in porcelanic gada sand color is included.
- Door: Made of tempered glass of 8 mm, hinges of anodized aluminium. Width 90 cm*.
- Control panel: Ecotouch
- Steam group included: Power according to model (optional: softener).
- Aromatherapy one essence included (optional up to 4 essences).

*Can vary according to customised design.

Code	Type	Dimensions (cm)	Heating (kW)	Control panel
73921	Bandha steam bath cabin	250 x 200 x 220	9 kW	Ecotouch
73922	Bandha steam bath cabin	250 x 250 x 220	12 kW	Ecotouch
73923	Bandha steam bath cabin	300 x 250 x 220	12 kW	Ecotouch
73924	Bandha steam bath cabin	300 x 300 x 220	12 kW	Ecotouch

STEAM BATHS





Lighting:
- Spots : 12V White LED
- Under bench: 12V RGB LED

Connection:
- 400 V III + Neutral + Grounding
- 230 V III + Grounding
- 230 V I + Neutral (9 Kw max.)

Cala steam bath cabin

New

Straight lines, sober and elegant design. AstralPool steam cabins offer the luxury of Italian design adapted to the most advanced technology in the market.

- Wall modules: Manufactured with double high density expanded polystyrene panel on an anodized aluminum structure.
- Ceiling: Vaulted ceiling made in black methacrylate modules of 3 mm, standing on anodized aluminium support, and tightenup with multicoated layers of polyester resin.
- Starry sky & underbench perimetral LED included.
- Diffuser in stainless steel
- Lower and upper ring: Anodized aluminum.
- Handle: Tubular stainless steel
- Frontal finishing: laminated glass (5+5) of 10 mm.
- Benches coated with large format porcelain in stone grey Kreta (Group 2).
- Walls coated with large format porcelain in stone grey Kreta (Group 2), black Sirius (Group 1).
- Sink in sand color is included.
- Door: Made of tempered glass of 8 mm, hinges of anodized aluminium. Width 90 cm*.
- Control panel: Ecotouch.
- Starry Sky is included in this model.
- Steam group included: Power according to model (optional: softener).
- Aromatherapy one essence included (optional up to 4 essences).

*Can vary according to customised design.

Code	Type	Dimensions (cm)	Heating (kW)	Control panel
73913	Cala steam bath cabin	250 x 200 x 220	9 kW	Ecotouch
73914	Cala steam bath cabin	250 x 250 x 220	12 kW	Ecotouch
73915	Cala steam bath cabin	300 x 250 x 220	12 kW	Ecotouch
73916	Cala steam bath cabin	300 x 300 x 220	12 kW	Ecotouch





Lighting:
- Spots : 12V White LED
- Under bench: 12V RGB LED

Connection:
- 400 V III + Neutral + Grounding
- 230 V III + Grounding
- 230 V I + Neutral (9 Kw max.)

Hara steam bath cabin

New

Straight lines, sober and elegant design. AstralPool steam cabins offer the luxury of Italian design adapted to the most advanced technology in the market.

- Wall modules: Manufactured with double high density expanded polystyrene panel on an anodized aluminum structure.
- Ceiling: Vaulted ceiling made in black methacrylate modules of 3 mm, standing on anodized aluminium support, and tightenup with multicoated layers of polyester resin.
- Starry Sky & underbench perimetral LED included.
- Diffuser in black lacquered.
- Lower and upper ring: Anodized aluminum.
- Handle: Tubular stainless steel matt black.
- Frontal finishing: laminated glass (5+5) of 10 mm.
- Frontal finishing Benches coated with large format porcelain in Nilium (Group 2).
- Walls coated with large format porcelain in Radium (Group 2).
- 1 Puff is included.
- Door: Made of tempered glass of 8 mm, hinges of anodized aluminium black matte.
- Control panel: Ecotouch.
- Starry Sky is included in this model.
- Steam group included: Power according to model (optional: softener).
- Aromatherapy one essence included (optional up to 4 essences).

*Can vary according to customised design.

Code	Type	Dimensions (cm)	Heating (kW)	Control panel
73925	Hara steam bath cabin	250 x 250 x 220	12 kW	Ecotouch
73926	Hara steam bath cabin	300 x 250 x 220	12 kW	Ecotouch
73927	Hara steam bath cabin	300 x 300 x 220	12 kW	Ecotouch

STEAM BATHS



Lighting:
- Spots : 12V White LED
- Under bench: 12V RGB LED
- Ceiling: 12V RGB LED

Connection:
- 400 V III + Neutral + Grounding
- 230 V III + Grounding
- 230 V I + Neutral (9 Kw max.)

Sutra steam bath cabin

New

Straight lines, sober and elegant design. AstralPool steam cabins offer the luxury of Italian design adapted to the most advanced technology in the market.

- Wall modules: Manufactured with double high density expanded polystyrene panel on an anodized aluminum structure.
- Ceiling: Vaulted ceiling made in white methacrylate modules of 3 mm, standing on anodized aluminium support, and tightenup with multicoated layers of polyester resin.
- Ceiling & underbench perimetral LED included.
- Diffuser in black lacquered.
- Lower and upper ring: Anodized aluminum.
- Handle: Tubular stainless steel matt black.
- Frontal finishing: laminated glass (5+5) of 10 mm.
- Benches coated with large format porcelain in Kairos (Group 3).
- Walls coated with white solid surface.
- Door: Made of tempered glass of 8 mm, hinges of anodized aluminium. Width 90 cm*.
- Control panel: Ecotouch
- Steam group included: Power according to model (optional: softener).
- Aromatherapy one essence included (optional up to 4 essences).

*Can vary according to customised design.

Code	Type	Dimensions (cm)	Heating (kW)	Control panel
73917	Sutra steam bath cabin	250 x 200 x 220	9 kW	Ecotouch
73918	Sutra steam bath cabin	250 x 250 x 220	12 kW	Ecotouch
73919	Sutra steam bath cabin	300 x 250 x 220	12 kW	Ecotouch
73920	Sutra steam bath cabin	300 x 300 x 220	12 kW	Ecotouch





FROM THE CONCEPT TO REALITY

In Fluidra we are aware about every project is unique and every place an experience. For that reason, we want to make it easy for you, manufacturing your ideal steam bath under your project needs.

A complete bespoke solution for te most demanding projects.



EMOTIONAL SHOWERS

Types of jets

	**RAIN** Delicate on the skin, the rain jet tickles it causing a pleasant, stimulating and relaxing sensation.		**NEBULIZED** The nebulized jet slips in the environment, wrapping the body in a cosy and regenerating cloud of water.		**TROPICAL** A constant and powerful jet, with an embracing and revitalizing effect, massaging the body and recharging its energy.
	**WATERFALL** The powerful gesture of the waterfall absorbs us and, through the skin contact, communicates its energizing force to the whole body.		**AERATED** Water and air mix and enhance each other, massaging the body and inducing creativity and dynamism.		**ATOMIZED** By reducing the water into tiny particles, the atomized jet gives a refreshing and relaxing feeling of wellbeing.
	**TROPICAL AERATED** The mix between tropical and aerated jets creates the effect of a dense rain which, descending, relieves and reduces muscular tension.		**LED + NEBULIZED** A mixture of different therapies and effects, the LED light optimizes and enriches the regenerating effects of nebulization.	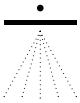	**LED + ATOMIZED** The fusion of water particles and LED light heat enhances and intensifies the delicate touch of the atomized jet.

Accessories

			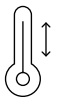
Audio	**Water aromatheraphy**	**Air aromatheraphy**	**Additional external thermostatic**

Controls

		
MANUAL Control (on/off) each shower jets through the keypad (as many buttons as types of jets).	**SEQUENCE** Activate the pre-programmed sequence of the different shower jets pressing only one button.	**MULTI SEQUENCE (SENSE PRO MODEL ONLY)** Activate the programmed sequence you want depending on your needs. Scheduled sequences: RELAX / BALANCE / SPORT / ENERGY

EMOTIONAL SHOWERS

Summary table

Code	Decsription	Lighting	Jets	Dimensions (cm)	Control	Accessories
AF-FL001	Sense Pro	RGB		70 x 70	4 Pre-set programs (Relax, Sport, Balance, Energy) (MULTISEQUENCE)	-
AF-FL002	Aqua Sequence	RGB		70 x 70	1 button to start the water sequence (SEQUENCE)	
AF-FL003	Aqua Sequence White	WHITE				
AF-FL004	Aqua Sequence Nude	-				
AF-FL005	Aqua	RGB	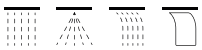	70 x 70	4 buttons. 1 to start each water effect. (MANUAL)	
AF-FL006	Aqua White	WHITE				
AF-FL007	Aqua Nude	-				
AF-FL008	Infinity Sequence	RGB		42 x 42	1 button to start the water sequence (SEQUENCE)	
AF-FL009	Infinity Sequence White	WHITE				
AF-FL010	Infinity Sequence Nude	-				
AF-FL011	Infinity	RGB		42 x 42	3 buttons. 1 to start each water effect. (MANUAL)	
AF-FL012	Infinity White	WHITE				
AF-FL013	Infinity Nude	-				
AF-FL014	Vita	RGB		Ø 50	2 buttons. 1 to start each water effect. (SEQUENCE)	
AF-FL015	Vita White	WHITE				
AF-FL016	Vita Nude	-				









EMOTIONAL SHOWERS



Sense Pro shower

New

RGB Lighting
Jets



Control panel & Sequences
relax I energy I balance I sport



	Code	Standard Pack	Standard Weight in kg	Standard Volume in m^3
Sense Pro shower	**AF-FL001**	1	-	-

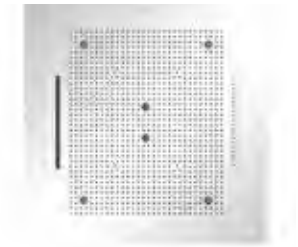

Aqua

Aqua shower

New

Aqua: RGB Lighting - Aqua Nude: Without lighting - Aqua White: White lighting
Jets

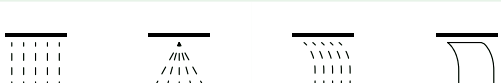

Control panel & Sequences
Manual

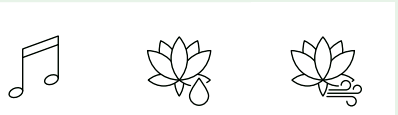

Sequence



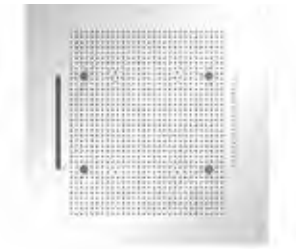

Aqua White

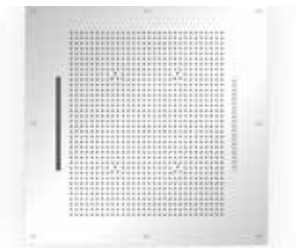

Aqua Nude

	Code	Standard Pack	Standard Weight in kg	Standard Volume in m^3
Aqua Sequence shower	**AF-FL002**	1	.	.
Aqua Sequence White shower	**AF-FL003**	1	.	.
Aqua Sequence Nude shower	**AF-FL004**	1	.	.
Aqua shower	**AF-FL005**	1	.	.
Aqua White shower	**AF-FL006**	1	.	.
Aqua Nude shower	**AF-FL007**	1	.	.

EMOTIONAL SHOWERS



Infinity

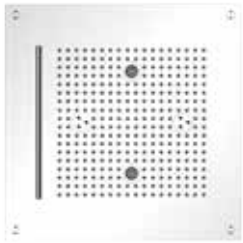

Infinity White

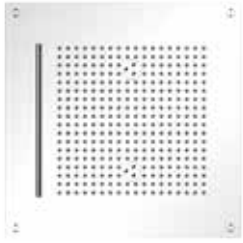

Infinity Nude

Infinity shower

New

Infinity: RGB Lighting - Infinity Nude: Without lighting - Infinity White: White lighting
Jets



Control panel & Sequences
Manual



Sequence



	Code	Standard Pack	Standard Weight in kg	Standard Volume in m³
Infinity Sequence shower	**AF-FL008**	1	-	-
Infinity Sequence White shower	**AF-FL009**	1	-	-
Infinity Sequence Nude shower	**AF-FL010**	1	-	-
Infinity shower	**AF-FL011**	1	-	-
Infinity White shower	**AF-FL012**	1	-	-
Infinity Nude shower	**AF-FL013**	1	-	-

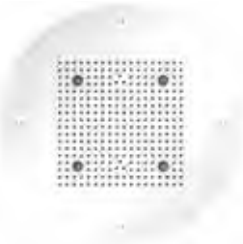

Vita

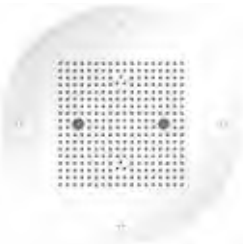

Vita White

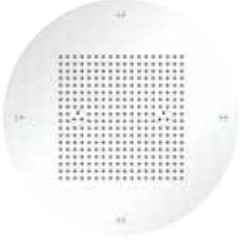

Vita Nude

Vita shower

New

Vita: RGB Lighting - Vita Nude: Without lighting - Vita White: White lighting
Jets

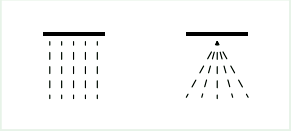

Control panel & Sequences
Manual



	Code	Standard Pack	Standard Weight in kg	Standard Volume in m³
Vita shower	**AF-FL014**	1	-	-
Vita White shower	**AF-FL015**	1	-	-
Vita Nude shower	**AF-FL016**	1	-	-

NORDIC BATHS



Wooden nordic bath

New

The baths are made with the best quality of Red Cedar (grade 2.40 mm thick) for maximum durability. They are available in different diameters from 150 cm to 220 cm to accommodate 2 to 8 people.

	Code	Standard Pack	Standard Weight in kg	Standard Volume in m^3
Wooden nordic bath				
150 cm - 2/3 people	**74095**	1	-	-
160 cm - 3/4 people	**74096**	1	-	-
180 cm - 5/6 people	**74109**	1	-	-
200 cm - 6/7 people	**74110**	1	-	-
220 cm - 7/8 people	**74111**	1	-	-



Stainless steel nordic bath

New

The baths are made with the best quality of Red Cedar (grade 2.40 mm thick) and stainless steel for maximum durability. They are available in different diameters from 150 cm to 220 cm to accommodate 2 to 8 people.

	Code	Standard Pack	Standard Weight in kg	Standard Volume in m^3
Stainlees Steel nordic bath				
150 cm - 2/3 people	**74112**	1	-	-
160 cm - 3/4 people	**74113**	1	-	-
180 cm - 5/6 people	**74114**	1	-	-
200 cm - 6/7 people	**74115**	1	-	-
220 cm - 7/8 people	**74116**	1	-	-



Stainless steel bath

New

AstralPool Nordic bath offers a unique filtration and treatment technology for Nordic baths to guarantee bacteria-free water.

- Ultra fine 1 micron filtration captures 100% of particles.
- The 18 m^3/h pump have a 6 minutes turnover.
- High radiation UV and Ozone treatments kill bacteria and disinfect the water.
- OZONE CHOC® treatment cleans biofilms and eliminates bacteria (international patent EP2785648).
- The measurement and management of water quality are managed by an integrated computer (ORP reader, pH, T° C).

Code	Description	Pump	Ozone generator	UV	Heater	PH/ORP gestion	Smartphone APP
74117	Water treatment nordic bath Standard	550 w	1 lamp	1 lamp	3 kw	-	-
74118	Water treatment nordic bath PRO	550 w	2 lamps	1 lamp	3 kw	Yes	-
74119	Water treatment nordic bath PRO+	750 w with integrated heater 1.5 wh	3 lamps	1 lamp	3 kw + 3 kw	Yes	Yes

MOODIFY

Moodify is the first emotional manager in the market capable of adapting to the user's needs in order to offer the perfect experience. This disruptive product merges different treatment concepts in just one session without the need for a therapist, using only the latest technology.

Offer unique experiences with Moodify. Create a 2.0 Wellness area including the version that best fits your project.



MOODIFY ROOM
The minimal proposal

MOODIFY AMBIENT
The modular proposal

MOODIFY SPA
The luxe esperience

For further information, contact the **Fluidra Projects department**
(Fluidra Engineering Services).

CHANGE YOUR MOOD

WWW.MOODIFY.TECH /



COMMERCIAL POOLS
HEATING AND DEHUMIDIFICATION

638 • Air-water heat pumps for outdoor installation
639 • Air-water heat pumps for indoor installation
640 • Electric heaters
641 • Water-water exchanger
642 • Water-water plate heat exchanger
644 • Dehumidifiers

new app:

AstralPool Toolbox

Download this new app to check which heat pump and dehumidifier best adapt to your pool.

+ info PDB
Further information on **PRODUCTS**
www.astralpool.com

AIR-WATER HEAT PUMPS FOR OUTDOOR INSTALLATION





ProHeat II

- 0°C minimum outdoor air temperature.
- 2 models: Standard and Chiller.
- Digital display.
- Heating priority mode (filtration pump control).
- Robust, lightweight casing made from corrosion-resistant magnesium coated aluminium.
- Axial ventilator.
- Automatic cooling mode for chiller model.
- Automatic defrosting.
- HP & LP safety pressure switch.
- Water flow switch.
- G2 Titanium water exchanger condensers. Guaranteed against corrosion.
- Scroll compressor.
- Thermostatic expansion valve, with external balancing unit.
- High performance evaporator battery in an inner corrugated copper tube with lacquered aluminium fins, especially for corrosive environments.
- Control of purifying system.
- Automatic electrical protections.

COMPATIBLE NN thing
Fluidra Connect compatible

TOOL BOX
AstralPool Toolbox app for IOS and Android

Web
Heat pump configurator:
www.astralpool.com -> Calculation tools

TECHNICAL SPECIFICATIONS

		MODELS	PROHEAT II 35	PROHEAT II 45	PROHEAT II 60	PROHEAT II 90	PROHEAT II 120
		Code STANDARD	65542-MOB	65543-MOB	65544-MOB	65545-MOB	65546-MOB
		CHILLER	68245-MOB	68246-MOB	68247-MOB	68248-MOB	68249-MOB
REFRIGERANT FLUID			R-410A				
RECOMMENDED WATER FLOW		m^3/h	12-15	15-25	25-35	30-50	50-70
HYDRAULIC CONNECTION		mm	63		75		
REFRIGERANT FLUID QUANTITY		kg	4	6	9	2 x 6.5	2 x 9
NUMBER OF FANS			1			2	
ELECTRIC POWER SUPPLY		V/Ph/Hz	400/3/50				
SOUND LEVEL		dbA (d*)	66.2	66.2	72.5	71.1	71.1
		dbA (5 m)	60.9	60.9	68.4	69.4	69.4
25°C Tª AIR 26°C Tª WATER	POWER CONSUMPTION	kW	6.4	8.2	11.9	17.0	24.3
	HEATING CAPACITY	kW	36.2	44.4	63.5	91.3	125.5
	COP		5.7	5.4	5.3	5.4	5.2
15°C Tª AIR 26°C Tª WATER	POWER CONSUMPTION	kW	6.2	8.1	11.5	16.8	23.9
	HEATING CAPACITY	kW	30.5	39.7	56.8	80.2	110.5
	COP		4.9	4.9	4.9	4.8	4.6
5°C Tª AIR 26°C Tª WATER	POWER CONSUMPTION	kW	6.0	7.9	10.7	16.2	22.7
	HEATING CAPACITY	kW	23.2	30.0	41.3	61.0	80.1
	COP		3.9	3.8	3.9	3.8	3.5
CHILLER MODE							
30°C AIR TEMPERATURE 26°C WATER TEMPERATURE	POWER CONSUMPTION	kW	7.0	8.4	12.0	17.3	24.4
	COOLING CAPACITY	kW	42.3	51.0	72.0	104.0	140.0
	EER		6.0	6.1	6.0	6.0	5.7
43°C AIR TEMPERATURE 32°C WATER TEMPERATURE	POWER CONSUMPTION	kW	9.4	11.9	15.6	24.5	31.2
	COOLING CAPACITY	kW	29.1	37.0	49.5	74.0	99.0
	EER		3.1	3.1	3.2	3.0	3.2
STANDARD AND CHILLER MODELS							
SIZE							
		A (mm)	1000		1700	2100	2400
		B (mm)	950		1200		
		C (mm)	1140		1200	1500	1700
NET WEIGHT		kg	185	210	287	447	500

NOTE: d* = As per UNE-EN 12102/ISO 3744:2010.

AIR-WATER HEAT PUMPS FOR INDOOR INSTALLATION



ProHeat II

- 0°C minimum outdoor air temperature.
- Digital display, easy-to-use control panel, with display of current temperature, setpoint and alarm messages.
- Heating priority mode (filtration pump control).
- Robust, lightweight casing made from corrosion-resistant magnesium coated aluminium.
- Axial ventilator.
- Automatic cooling mode (chiller model).
- Automatic defrosting.
- HP & LP safety pressure switch.
- Water flow switch.
- G2 Titanium water exchanger condensers. Guaranteed against corrosion.
- Scroll compressor.
- Thermostatic expansion valve, with external balancing unit.
- High performance evaporator battery in an inner corrugated copper tube with lacquered aluminium fins, especially for corrosive environments.
- Control of purifying system.
- Automatic electrical protections.
- Centrifugal fans so the unit will be installed in a technical room, using air ducting.

Fluidra Connect compatible

AstralPool Toolbox app for IOS and Android

Web
Heat pump configurator:
www.astralpool.com -> Calculation tools

TECHNICAL SPECIFICATIONS

		MODELS	PROHEAT II IND-35	PROHEAT II IND-45	PROHEAT II IND-60	PROHEAT II IND-90	PROHEAT II IND-120
		CODE	69649-MOB	69650-MOB	69651-MOB	69652-MOB	69653-MOB
REFRIGERANT FLUID			R-410A				
RECOMMENDED WATER FLOW		m^3/h	12-15	15-25	25-35	30-50	50-70
HYDRAULIC CONNECTION		mm	63		75		
REFRIGERANT FLUID QUANTITY		kg	6	9	12	2 x 7	2 x 9
NUMBER OF FANS			1			2	
ELECTRIC POWER SUPPLY		V/Ph/Hz	400/3/50				
SOUND LEVEL		dbA (d*)	59.2	59.6	60.0	61.1	61.5
		dbA (5 m)	55.4	55.8	56.1	56.5	56.6
25°C Tª AIR 26°C Tª WATER	POWER CONSUMPTION	kW	6.7	9.4	11.8	18.7	23.6
	HEATING CAPACITY	kW	43.6	56.6	71.0	113.1	141.9
	COP		6.5	6.0	6.0	6.0	6.0
15°C Tª AIR 26°C Tª WATER	POWER CONSUMPTION	kW	6.4	8.6	11.0	17.1	22.1
	HEATING CAPACITY	kW	34.9	45.0	57.5	90.1	114.9
	COP		5.4	5.3	5.2	5.3	5.2
5°C Tª AIR 26°C Tª WATER	POWER CONSUMPTION	kW	6.5	8.5	11.2	16.9	22.3
	HEATING CAPACITY	kW	27.4	35.2	45.2	70.5	90.3
	COP		4.2	4.2	4.1	4.2	4.1
DIMENSIONS							
SIZE							
		A (mm)	1610	1910		1922+50	2400+100
		B (mm)	1160+100	1197+100		2110+100	2024+50
		C (mm)	1347+50	1497+50		1590+50	1670+50
NET WEIGHT		kg	315	391	437	648	757

NOTE: d* = As per UNE-EN 12102/ISO 3744:2010.

+ info
PDB Product Database
Further information on **PRODUCTS**
www.astralpool.com

ELECTRIC HEATERS



Commercial electricheat (incoloy version)

Commercial electricheat is suitable to heat the water temperature from small to large collective pools.

- Positive safety high temperature limiter (60°C).
- Digital display.
- Flow switch.
- Power contactors.
- Temperature control thermostat from 0 to 40°C.
- Precision thermostat: 0.1°C.

TECHNICAL FEATURES

	MODELS	Electric heat 24	Electric heat 30	Electric heat 36	Electric heat 42	Electric heat 48	Electric heat 54	Electric heat 60	Electric heat 72	Electric heat 84	Electric heat 96	Electric heat 108
	CODES	51845	51846	51847	44741	44742	44743	44744	44745	44746	44747	44748
POWER (kW)	90ºC	24	30	36	42	48	54	60	72	84	96	108
ELECTRICAL SUPPLY	V/Ph/Hz	400V/50Hz/3Ph										
MIN. WATER FLOW RATE	m^3/h	15										
MAX. WATER FLOW RATE	m^3/h	30										
SERVIDE PRESSURE	bar	2										
MAX. PRESSURE	bar	3										
HYDRAULIC WATER CONNECTION	mm	50								65		
MAX. ABSORVED INTENSITY (AMP)	400V/50Hz/3Ph	36	45	54	65	74	82	91	109	127	146	165
DIMENSIONS	A (mm)	510										
	B (mm)	640								915		
	C (mm)	160										
	D (mm)	2''								2 ½''		
	E (mm)	435										
GROSS WEIGHT	kg	24	26	28	32	34	36	38	44	46	48	50
NET WEIGHT	kg	18	20	22	26	28	30	32	36	38	40	42

Consult your service engineer about the right selection of unit depending on your installation.

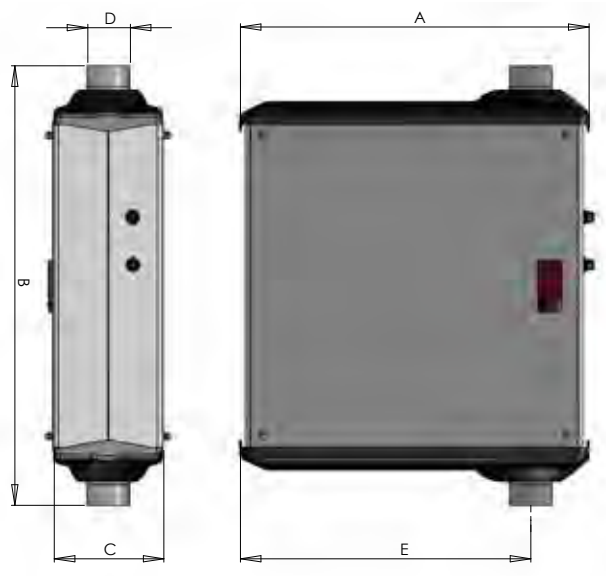

WATER-WATER EXCHANGER





Waterheat EVO

Heat exchanger suitable for warming the water temperature of pools and SPAS, thanks to the heat exchange between the primary circuit (warm area) and a secondary one (cold area that we want to warm).

- Titanium housing (secondary, pool water).
- Titanium coil (primary, water for boiler).
- Primary working pressure of 10 bar.
- Secondary working pressure of 3 bar.

	Code	Standard Pack	Standard Weight in kg	Standard Volume in m³
TIT-20 kW	**71607**	1	1.2	-
TIT-40 kW	**71608**	1	1.7	-
TIT-60 kW	**71609**	1	1.9	-
TIT-105 kW	**71610**	1	2.2	-
TIT-140 kW	**71611**	1	2.7	-
TIT-210 kW	**71612**	1	3.8	-
TIT-300 kW	**71613**	1	5.3	-
TIT-450 kW	**71614**	1	6.8	-

Diagram of assembly below the water level:

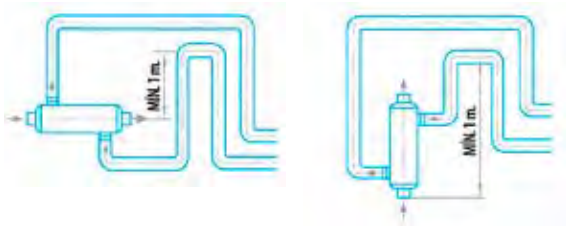

Diagram of assembly below the water level:



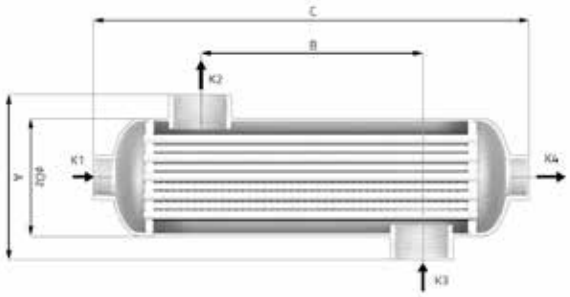

TECHNICAL FEATURES

MODELS		TIT-20 KW	TIT-40 KW	TIT-60 KW	TIT-105 KW	TIT-140 KW	TIT-210 KW	TIT-300 KW	TIT-450 KW
CODES		71607	71608	71609	71610	71611	71612	71613	71614
POWER (kW)	90ºC	20	40	60	105	140	210	300	450
	60ºC	10	20	30	40	60	80	120	210
	45ºC	5	10	15	20	3	40	60	100
HEATER	m³/h	1.6	2.7	3.1	6.6	7.0	10.0	11.0	16.0
HEATER LOAD LOSS	bar	0.006	0.024	0.040	0.030	0.040	0.122	0.214	0.470
HEATER CONNECTION	Inch	G ¾"			G 1 ½"				
POOL VOLUME	m³/h	11	15	20	23	20	25	20	21
POOL HEAD LOSS	bar	0.119	0.192	0.418	0.293	0.316	0.633	0.596	0.860
POOL CONNECTION	Inch	G 1"	G 1 ½"						
DIMENSIONS	A (mm)	122			140				
	B (mm)	75	175	225	170	270	420	670	920
	C (mm)	290	390	440	357	457	607	857	1107
	Ø Dz	80			102				
WEIGHT	kg	1.2	1.7	1.9	2.2	2.7	3.8	5.3	6.8

Consult your service engineer about the right selection of unit depending on your installation.
Figures for power settings calculated for pool water at 20° C.

+ info
PDB Product Database
Further information on **PRODUCTS**
www.astralpool.com

WATER-WATER PLATE HEAT EXCHANGER



Equipped Waterheat

Heat exchanger suitable for warming the water temperature of pools and SPAS, thanks to the heat exchange between the primary circuit (warm area) and a secondary one (cold area that we want to warm).

- Regulator with secondary pump control, voltage free contact and timer.
- Casing built in Alucoil and ABS plastic.
- Body made in Titanium (secondary, water from pool).
- Coils made in titanium alloy (primary, water from boiler).
- Fully fitted, anti-return valve, primary recirculation pump and control thermostat with immersion probe.
- Primary work pressure 10 bars and secondary work pressure 3 bars.

CONNECTIONS:

- Primary (heating): 1".
- Secondary (pool): D-50 three piece link.

	Code	Standard Pack	Standard Weight in kg	Standard Volume in m^3
TIT-20 kW	**43506**	1	10	-
TIT-40 kW	**43507**	1	11	-
TIT-60 kW	**43508**	1	18	-

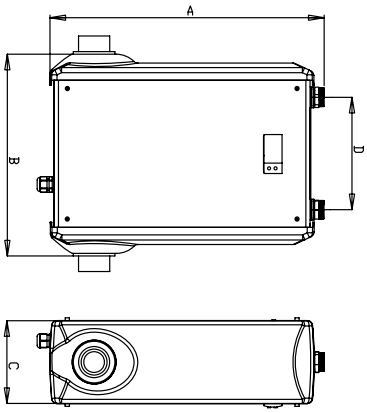



TECHNICAL FEATURES

	MODELS	EQUIP. WATERHEAT-20KW	EQUIP. WATERHEAT-40KW	EQUIP. WATERHEAT-60KW
	CODES	43506	43507	43508
POWER (kW)	90ºC	20	40	60
	60ºC	10	20	30
	45ºC	5	10	15
HEATER	m^3/h	1.6	2.7	3.0
HEATER LOAD LOSS	bar	0.12	0.41	0.70
HEATER CONNECTION	Inch	-	-	-
POOL VOLUME	m^3/h	10	15	20
POOL HEAD LOSS	bar	0.14	0.24	0.29
POOL CONNECTION	Inch	-	-	-
DIMENSIONS	A (mm)	530	530	530
	B (mm)	450	590	650
	C (mm)	160	160	160
	D (mm)	215	225	305
	E (mm)	1"	1"	1"
WEIGHT	kg	10	11	18

Consult your service engineer about the right selection of unit depending on your installation.
Figures for power settings calculated for pool water at 20º C.

WATER/WATER PLATE HEAT EXCHANGER

Etna

- Corrugated plates in AISI-316 or Titanium.
- EPDM gaskets.
- Housing in epoxy painted carbon steel.
- In non-equipped heat exchangers, AISI-316 stainless steel connections in ISO G2 direct thread.
- In "equipped" heat exchangers, primary connections in copper, and secondary in PVC.
- In "equipped" heat exchangers, full regulation, with control of the filtering pump. Double display (setpoint and current reading).
- Simple recirculating pump in the primary circuit is optional.



Basic model



Equipped model



Equipped model + recirculating pump

Model	AISI-316 codes			Titanium codes			Power		N° Plates	Primary circuit			Secondary circuit		
	Basic model	Equipped model	Model Eq+B(1)	Basic model	Equipped model	Model Eq+B(1)	KW	(kcal/h)		Flow rate (m^3/h)	Head loss (bar)	Connections	Flow rate (m^3/h)	Head loss (bar)	Connections
ETNA-15	**67985**	**68230**	**68021**	**67994**	**68012**	**68030**	17	15,000	5	0.75	0.3	1 ¼"	0.74	0.3	1 ¼"
ETNA-35	**68223**	**68004**	**68022**	**67995**	**68013**	**68031**	40	35,000	7	1.55	0.3	1 ¼"	1.52	0.3	1 ¼"
ETNA-50	**68224**	**68005**	**68023**	**67996**	**68014**	**68032**	58	50,000	9	2.56	0.3	1 ¼"	2.51	0.3	1 ¼"
ETNA-60	**68225**	**68006**	**68024**	**67997**	**68015**	**68033**	70	60,000	11	3.09	0.3	1 ¼"	3.03	0.3	1 ¼"
ETNA-90	**67989**	**68007**	**68025**	**67998**	**68016**	**68034**	105	90,000	15	4.64	0.3	1 ¼"	4.55	0.3	1 ¼"
ETNA-120	**67990**	**68008**	**68026**	**68226**	**68017**	**68035**	140	120,000	19	6.19	0.3	1 ¼"	6.07	0.3	1 ¼"
ETNA-150	**67991**	**68009**	**68027**	**68227**	**68018**	**68036**	174.4	150,000	23	7.71	0.3	1 ¼"	7.56	0.3	1 ¼"
ETNA-180	**67992**	**68010**	**68028**	**68228**	**68019**	**68037**	209	180,000	29	9.23	0.3	1 ¼"	9.06	0.3	1 ¼"
ETNA-200	**67993**	**68011**	**68029**	**68229**	**68020**	**68038**	233	200,000	31	10.3	0.3	1 ¼"	10.1	0.3	1 ¼"
ETNA-250	**32550**	**32563**	**32576**	**33137**	**33155**	**33173**	291	250,000	15	12.86	0.3	2 ½"	12.61	0.3	2 ½"
ETNA-300	**32552**	**32565**	**32578**	**33139**	**33157**	**33175**	349	300,000	17	15.42	0.3	2 ½"	15.13	0.3	2 ½"
ETNA-350	**32553**	**32566**	**32579**	**33140**	**33158**	**33176**	407	350,000	21	17.98	0.3	2 ½"	17.64	0.3	2 ½"
ETNA-400	**33114**	**33119**	**33124**	**33141**	**33159**	**33177**	465	400,000	23	20.55	0.3	2 ½"	20.13	0.3	2 ½"
ETNA-460	**33115**	**33120**	**33125**	**69796**	**33160**	**33178**	535	460,000	25	23.64	0.3	2 ½"	23.19	0.3	2 ½"
ETNA-500	**32554**	**32567**	**32580**	**69797**	**33161**	**33179**	581	500,000	27	25.18	0.3	2 ½"	25.18	0.3	2 ½"
ETNA-580	**33116**	**33121**	**33126**	**69798**	**33162**	**33180**	675	580,000	33	29.26	0.3	2 ½"	29.26	0.3	2 ½"

(1) Eq + B: Equipped model + recirculating pump.

+ info
PDB Product Database
Further information on **PRODUCTS**
www.astralpool.com

DEHUMIDIFIERS



BDP Confort Dehumidifying Unit

The BDP Confort heat pump is used for the dehumidification of indoor pools, using the latent heat of evaporation and the performance of the system itself to heat the pool water and the room air.
The energy savings achieved with these systems compared to traditional heating systems mean that they are virtually essential when you wish to heat an indoor pool.
The wide range of models covers all market requirements.

- Made of non-corrosive magnesium coated aluminium.
- Thermal-acoustic inside insulation.
- Direct transmission single centrifugal ventilator. Radial Ventilator Optional.
- Air filter can be changed for a G4 type filter.
- Condensation collection gutter with drainpipe.
- A copper nitrogen, dehydrated and deoxidized refrigerated circuit. Air condensation.
- Ozone-safe R407C refrigerant gas charge (ecological).
- Evaporation, condensation and hot water batteries made of copper pipes with lacquered aluminium fins (specially designed for corrosive environments).
- Airtight compressor mounted on anti-vibration mounts.
- Pressure balancing expansion valve.
- High and low pressure switch.
- General security switch.
- Power source, compressor and ventilator motor protection mechanisms.
- Full adjustment of all the items included.
- Three-way valves and their regulation when a hot water coil is incorporated.

Optional:

- 1 or 2 stage electric heating option to support air heating.
- Hot water coil to support air heating, with three-way valve, temperature probe and regulation (ask about primary temperatures different to standard equipment).
- Freecooling or mixed chamber and shutter to bring in outside air.
- Optional enthalpic regulation in the case of freecooling.

Generation Operating Conditions
The thermo-hygrometric conditions for these facilities that are considered optimal for materials and people include:

- Air 28ºC - 30ºC
- 65% HR
- Water 2ºC below air temperature.

TOOL BOX
AstralPool Toolbox app for IOS and Android

Web
Dehumidifier configurator: www.astralpool.com -> Calculation tools

New
OPTIONAL U.V. DISINFECTION SYSTEM
More info in page 647

TECHNICAL FEATURES

		MODELS	BDP-4	BDP-5	BDP-6	BDP-8	BDP-10	BDP-12	BDP-16
DEHUMIDIFICATION CAP.		l/h	4,2	5,2	5,9	8,3	11	12,5	17,35
AIR CONDENSATION POWER		kW	7.1	8.5	11.6	12.4	13.8	19.1	26.7
COOLING CIRCUIT									
TYPE OF COMPRESSOR			ROTARY						
GAS LOAD		Kg.	3	3,5	4	5	9	9	10
VOLTAGE		V/Ph/Hz	230 / 1 / 50			400 / 3 / 50			
MAX. CONSUMPTION		kW	1,8	2,4	3,71	3,66	4,33	5,49	6,81
FANS									
TYPE			CENTRIFUGAL						
AIR FLOW RATE		m^3/h	1000	1200	1800	2800	3800	4300	5500
TOTAL AVAILABLE PRESSURE		mca	15	15	20	20	20	20	20
MAX. CONSUMPTION KW		RETURN	0,2	0,2	0,25	0,55	1,1	1,1	3,00
OTHER DATA									
Ø DRAIN		mm	22						
NOISE LEVEL AT 1 M		dB	68				69		70
WEIGHT		kg	100	110	160	182	270	360	448
AIR FILTERS			G4						
OPTIONAL									
ELECTRIC HEATING POWER		W	5.0		-	-	-	-	-
HOT WATER COIL POWER	**POWER**	W	11.6		22.2		35.8		54.9
	PRIMARY T.	ºC	90						
		ºC	70						
	FLOW RATE	l/h	500	500	990	990	1590	1590	2420
	CONNECTION	Inches	¾"	¾"	¾"	¾"	¾"	¾"	¾"

1) For 28 ºC air T. 65% RH, 24 ºC water T,
2) Return plus suction.

DEHUMIDIFIERS





TOOL BOX

AstralPool Toolbox app for IOS and Android

AirPool

The new AIRPOOL dehumidifier is used to dehumidify covered pools by harnessing the latent heat from vaporisation and the very output of the equipment in heating the basin water and pool ambient air, recovering the energy needed and controlling air temperature and relative humidity.

STRUCTURE

- The structure is made from aluminium profiles with reinforced nylon on the corners.
- The housing is a 25 mm sandwich panel with IDROTEC polyurethane and auto-close handles, classifying the equipment as tightness L1(M) and thermal transmission T2.
- Condensation collection gutter with drainpipe.

COOLING CIRCUIT

- Evaporation and condensation battery made out of copper pipes with lacquered aluminium fins.
- Scroll compressor.
- R-410A refrigerant gas.

AIR CIRCUIT

- G4 filter.
- Free-cooling system made up of three motorized weir flaps, mixing chamber and return fan.

REGULATORS

- Through a programmable electronic regulator.
- Return air and outside air humidity and temperature probes, and a pool water temperature probe.
- Dirty filter pressure switches.
- Control of the pool water circulation pump through a voltage-free contact.
- Free-cooling weir flap servomotors.

OPTIONAL

- Harnesses the energy in the air discharged from the high-performance crossflow recuperator (according to Spain's RITE Regulation for Thermal Installations in Buildings)
- High-performance backup hot water coil manufactured in copper piping and lacquered aluminium fins specially designed for corrosive atmospheres. Includes a 3-way proportional valve. Controls flow temperature as an optional extra.
- Titanium condensers with PVC shell and Titanium coil.
- M6 filter in pool air suction unit and exterior air inlet and F8 filter in flow unit.
- Siemens regulation with touchscreen, enthalpy control and Eco operating mode, reducing fan flow in line with setpoints.
- Electronic radial plug fan with flow rate control.
- Water-water exchanger, assembled with the water condenser as a series feature.
- Increased air and pressure flow available in fans.
- External condenser.
- Weatherproofed.
- Optional CO_2 probes for controlling the quality of the air and adjusting it.
- Remote management.
- AND/OR preventive maintenance.
- AND/OR warranty extension.
- Start-up.

New

OPTIONAL U.V. DISINFECTION SYSTEM
More info in page 647

TECHNICAL FEATURES

MODELS		AIRPOOL-9	AIRPOOL-14	AIRPOOL-18	AIRPOOL-25	AIRPOOL-35	AIRPOOL-45	AIRPOOL-55	AIRPOOL-70	AIRPOOL-85	AIRPOOL-110	AIRPOOL-140	AIRPOOL-180
CODES		67665	67666	67667	67668	67669	67670	67671	67672	67673	67674	67675	67676
Voltage	V/Ph/Hz	230 / 1 / 50	400 / 3 / 50										
Dehumidification (1)	kg/h	8.4	14.1	18.6	27.0	34.5	47.1	54.3	71.2	86.5	108.0	136.9	177.8
Dehumidification (2)	kg/h	11.6	18.0	23.0	34.4	42.7	59.0	69.1	88.9	108.0	135.0	177.0	231.0
Dehumidification (3)	kg/h	6.1	10.3	12.7	16.6	22.9	30.9	34.5	46.0	57.0	72.2	90.9	116.5
Air flow rate	m³/h	1800	2500	3800	5500	7000	10000	12000	15000	18000	22000	30000	40000
Crossflow recuperator	m³/h	540	750	1140	1800	2100	3000	3600	4500	5500	7000	10000	13500
Air battery power (80-60°C)	kW	14.3	22.1	29.3	40.7	54.2	78.3	88.1	111.5	134.1	167.1	237.5	293.8

(1) Local 28°C 65% hr with 30% outside air 20°C 70% hr. With recuperator.
(2) VDI 2089 Local 30°C 54% hr with 30% outside air 5°C 80% hr. With recuperator.
(3) Local 28°C 65% hr in recirculation.

+ info
PDB Product Database
Further information on **PRODUCTS**
www.astralpool.com

DEHUMIDIFIERS





Only heats air.



Dehumidification through alpha circuit



Dehumidification through alpha circuit with air renewal



Full air renewal.

New

OPTIONAL U.V. DISINFECTION SYSTEM
More info in page 647

AirPool+

The new high performance AIRPOOL + dehumidifier is used for dehumidifying indoor pools. Thanks to its design, in which the cooling circuit components are distributed differently to conventional dehumidifiers, it uses the dehumidified air to recover heat. By optimising its various operating modes, huge savings can be made in running a pool.

STRUCTURE

- The structure is made from aluminium profiles with reinforced nylon on the corners.
- The housing is a 45 mm sandwich panel with IDROTEC polyurethane and auto-close handles, classifying the equipment as tightness L1(M) and thermal transmission T2.
- Condensation collection gutter with drainpipe.
- Equipment interior with painted sheet metal for greater durability against chlorine degradation.

COOLING CIRCUIT

- High-performance evaporation and condensation batteries manufactured in copper piping and lacquered aluminium fins.
- Scroll compressor.
- R-410A refrigerant gas.

AIR CIRCUIT

- M6 filter in pool air suction unit and exterior air inlet and F8 filter in flow unit.
- Radial plug fans with flow rate control
- Free-cooling system made up of three motorized weir flaps, mixing chamber and return fan.
- Harnesses the energy in the air discharged from the crossflow recuperator from 100% of flow
- Back-up water heating battery. With three-way proportional valve and flow-rate temperature control.

REGULATORS

- Siemens regulation with touchscreen, absolute humidity control and Eco operating mode, reducing fan flow in line with setpoints.
- Return air and outside air humidity and temperature probes, and a pool water temperature probe.
- Dirty filter pressure switches.
- Control of the pool water circulation pump through a voltage-free contact.
- Servomotors for free-cooling weirs.

OPTIONAL

- Increase in air flow rate (involves rise in heating battery power)
- Titanium condensers with PVC shell and Titanium coil.
- Water-water exchanger, assembled with the water condenser as a series feature.
- Equipment can be operated in reverse to expel surplus heat from the facility.
- Weatherproofed.
- Optional CO_2 probes for controlling the quality of the air and adjusting it.
- ModBus.
- Remote management.
- AND/OR preventive maintenance.
- AND/OR warranty extension.
- Start-up.

TECHNICAL FEATURES

MODELS		AIRPOOL+ 12	AIRPOOL+ 22	AIRPOOL+ 30	AIRPOOL+ 44	AIRPOOL+ 54	AIRPOOL+ 70	AIRPOOL+ 84	AIRPOOL+ 108	AIRPOOL+ 132	AIRPOOL+ 175
CODES		67677	67678	67679	67680	67681	67682	67683	67684	67685	67686
Voltage	V/Ph/ Hz	220 / 1 / 50	400 / 3 / 50								
Dehumidification (1)	kg/h	13.4	22.3	21.7	44.3	53.6	70.9	84.2	110.7	133.4	177.6
Dehumidification (2)	kg/h	25.6	30.2	57.1	85.6	102.3	136.8	162.4	213.7	256.2	342.3
Dehumidification (3)	kg/h	8.0	12.8	12.3	25.0	37.8	42.5	50.6	66.5	83.7	130.9
Air flow rate	m³/h	2100	3500	4900	7000	8400	11200	13300	17500	21000	28000
Recuperator efficacy (1)	%	67	69	71	68	73	70	70	70	68	68
Air battery power (90-70°C)	kW	20.4	38.7	48.5	71.0	87.9	106.7	134.2	177.8	216.5	273.0

(1) Local 28°C 65% hr with 30% outside air 20°C 70% hr.
(2) VDI 2089 Local 30°C 54% hr with 30% outside air 5°C 80% hr.
(3) Local 28°C 65% hr in recirculation.

DEHUMIDIFIERS

Optional U.V. disinfection system

Optional U.V. disinfection system, fitted in evaporators or in air treatment system in air ducts to, is a highly effective way to destroy microorganisms including: virus, bacteria, and mold spores.
Short wave UV light (UVC) penetrates the cell structure of the micro-organism and destroys the DNA structure and thereby prevents it from replicating.

This method of purification is ideal for dehumidifiers because it is completely safe, fast and easy with simple use and maintenance.

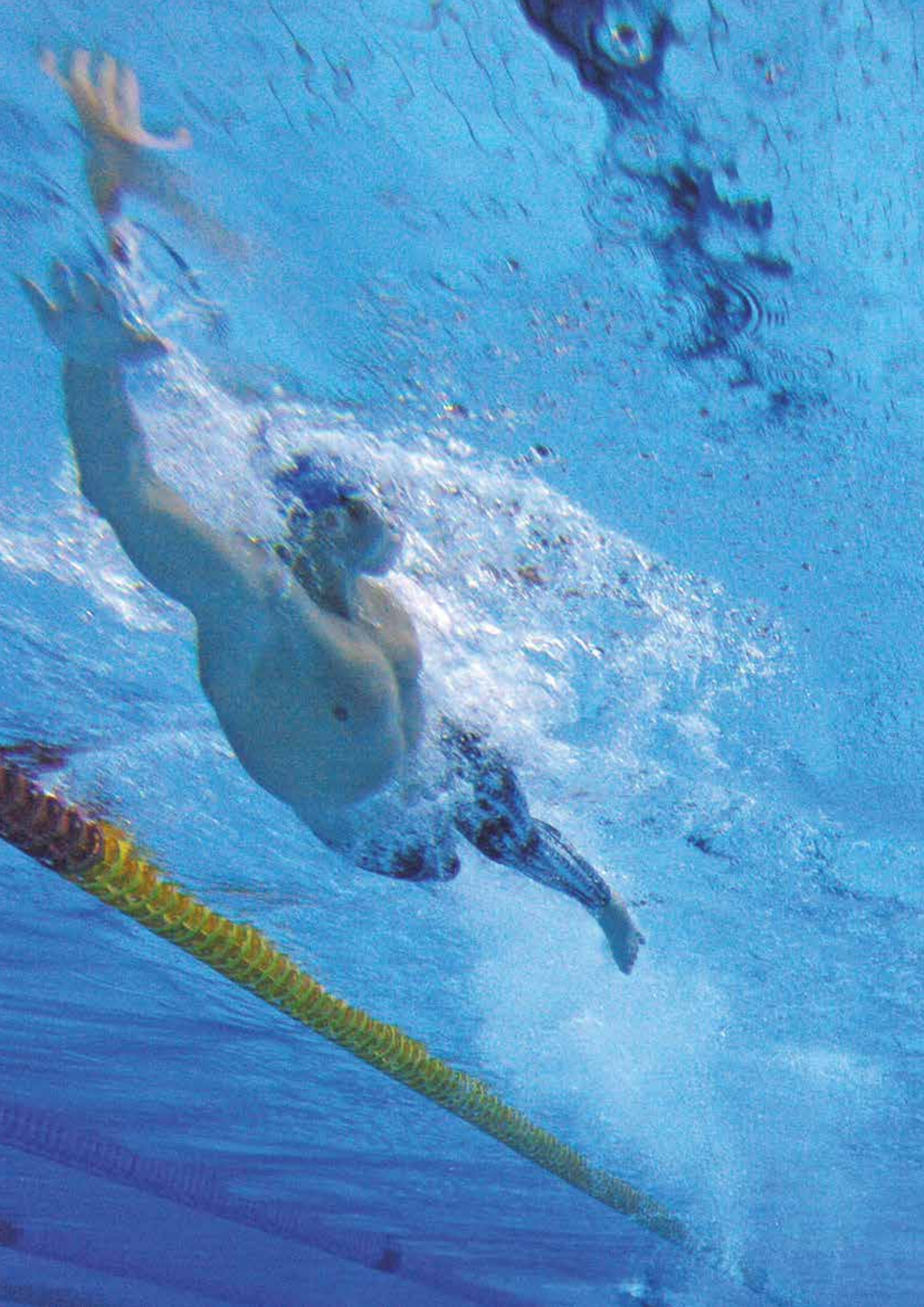



COMMERCIAL POOLS
COMPETITION MATERIALS

650 • Competition pool systems
652 • Swimming pool competition podiums
655 • Lane ropes
656 • Floats
657 • Lane rope storage equipment
658 • Lane rope accessories
660 • Signage
661 • Turning panels
662 • Attachments for competition equipment
662 • Water polo goal

COMPETITION POOL SYSTEMS

Sparger. Safety on diving boards.

When diving off a diving board, the undisturbed water forms a fairly resistant surface, which if combined with a bad descent can result in serious injury on impact.

AstralPool has added Sparger technology to its pools in the shape of a new safety system for diving pools. Air is released at high pressure from the pool floor, which forms a large amount of bubbles when it mixes with the water to form a cushion for divers. This reduces the risk of injury and divers are more confident when they dive into the water, whether they are beginners or professionals.



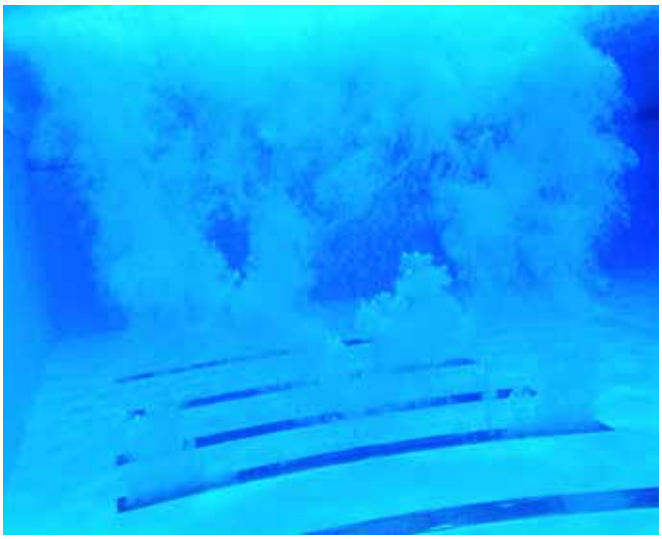

Movable wall. Divides pools and multiplies their uses.



Technology that allows a single pool to be divided into two separate pools for different uses. This therefore makes better use of space and gives swimmers a greater variety of options for a lower overall cost.

The movable wall system is able to adapt to and be used in existing pools or newly built ones.

The movable wall is made of AISI-304 stainless steel and is lined with white plastic non-slip sheeting.

LOCATION OF THE EQUIPMENT USED IN COMPETITION POOLS

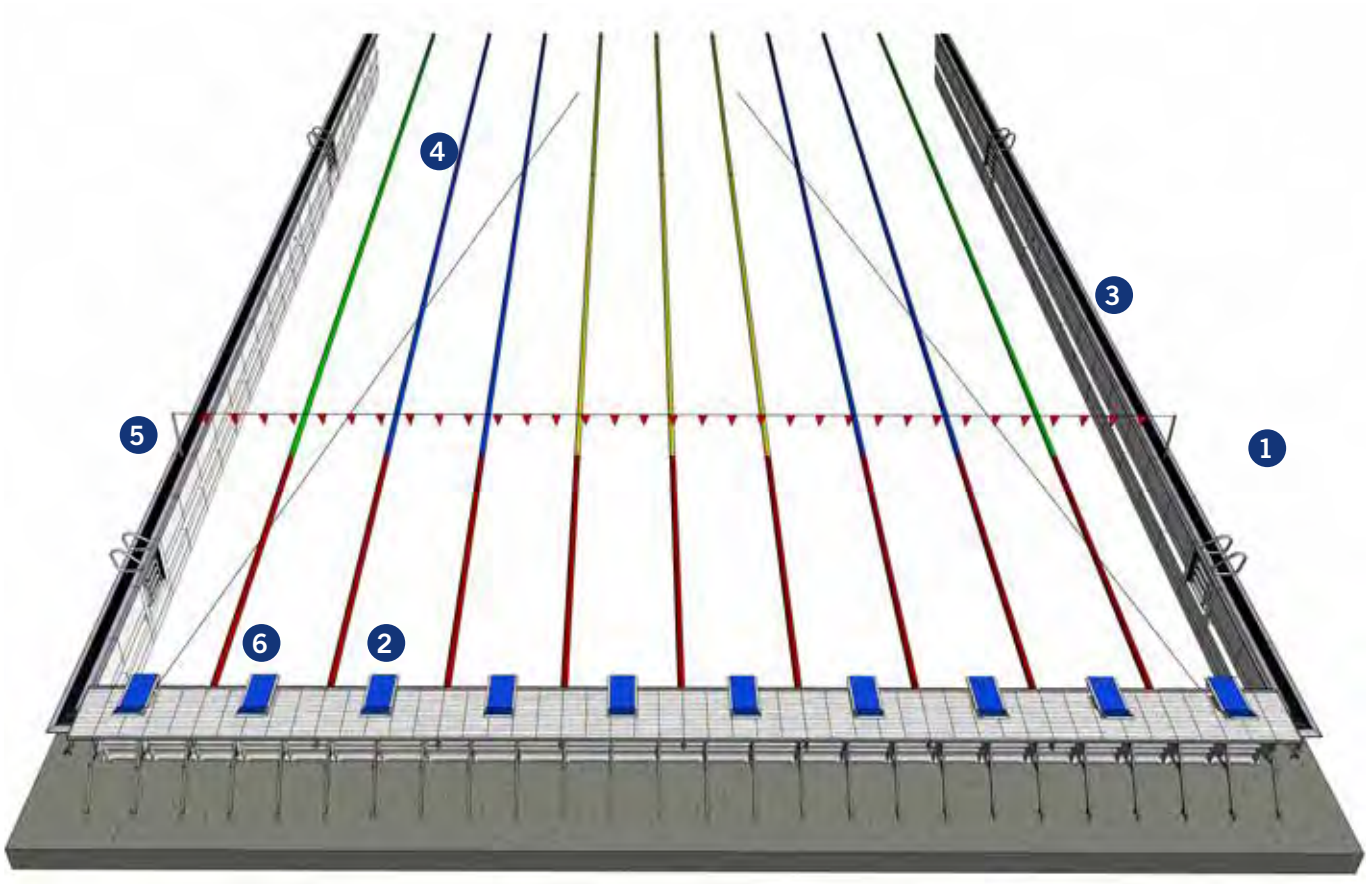

1. Ladder
2. Starting block
3. Grating for pool overflow
4. Float lines
5. Backstroke flags
6. Turning panel with supports

+ info PDB Product Database
Further information on **PRODUCTS**
www.astralpool.com

SWIMMING POOL COMPETITION PODIUMS



Starting block

Specially designed for competition events. Available with adjustable footrest to facilitate entry into the water. Its minimalist design in high quality materials gives it an elegant and modern look.
Manufactured in AISI-316 stainless steel. Polished surface finish. Adjustable support (6 positions). Fastening 54460 not included in supply.

	Code	Standard Pack	Standard Weight in kg	Standard Volume in m³
Starting block	**53875**	**1**	-	-

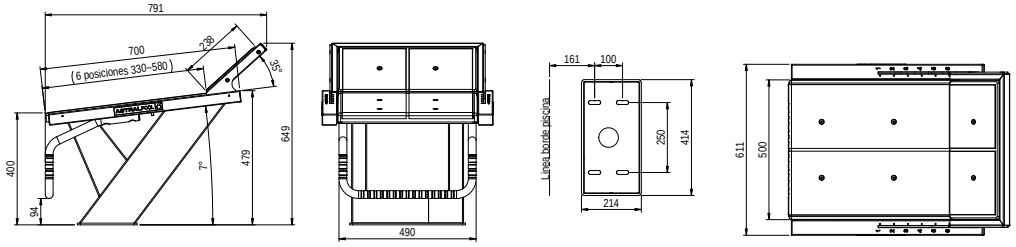



Starting block H-700 mobile support

New

Specially designed for competition FINA compliant and UNE EN 13451-4. It has adjustable support of 6 positions to facilitate the exit to the swimmer. Made of AISI-316 stainless steel and witha height of 700 mm to avoid having to install headwall for podiums in the pool. Installation with anchor 73971 not included in supply.

	Code	Standard Pack	Standard Weight in kg	Standard Volume in m³
Starting block, height 700 mm	**74011**	1	110	-

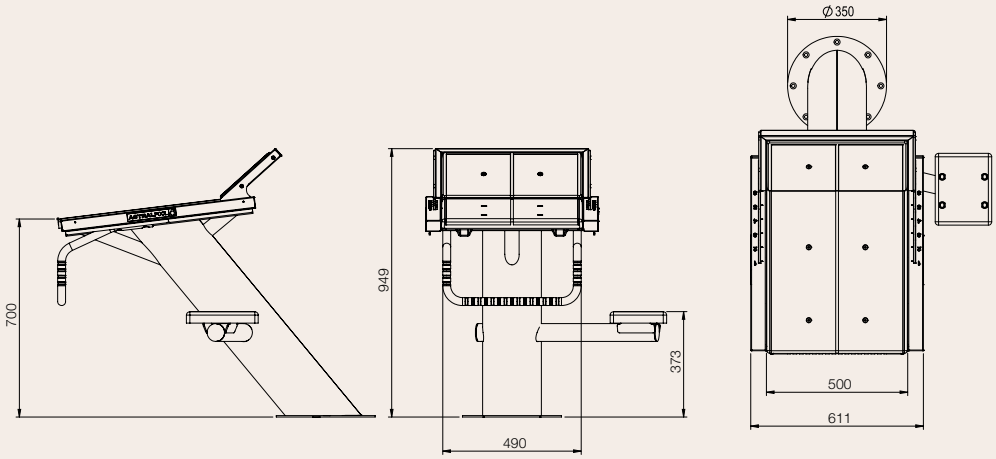



Starting block H-700 anchorage

New

Anchor designed for the H-700 podium with support, code 74011, to be embedded in concrete. Made in Stainless Steel AISI-316L.

	Code	Standard Pack	Standard Weight in kg	Standard Volume in m³
Anchor	**73971**	1	8.42	-

SWIMMING POOL COMPETITION PODIUMS



Starting blocks

Base in S.S. AISI-316. Adjustable platform in polyester & fibreglass with non-slip finish 500 mm x 500 mm. Number sequence not included. Plate anchoring for starting block in AISI-316 code 54461 not included.

	Code	Standard Pack	Standard Weight in kg	Standard Volume in m³
POLISHED FINISH:				
Height 700 mm	**00144**	1	32.0	0.36
Height 400 mm	**00145**	1	25.3	0.18

00144

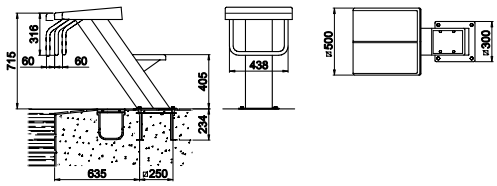

00145

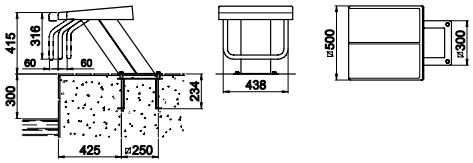



Starting blocks

Made in S.S. AISI-304. Platform in Polyester and fibreglass with non-slip finish 500 mm x 500 mm. Number sequence not included.

	Code	Standard Pack	Standard Weight in kg	Standard Volume in m³
POLISHED FINISH:				
Height 700 mm	**00146**	1	25.0	0.48
Height 400 mm	**27578**	1	18.0	0.11

00146

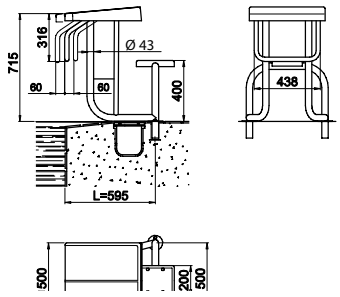

27578

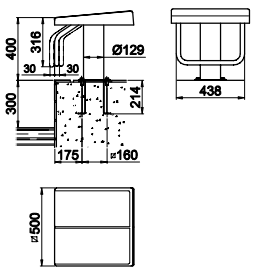

Note: The starting block with code number 00146 may be made to order to adapt to the position of the overflow channels. In such cases, the measurement for L must be provided.

Notes:
Code 00146: Fastener (code 00143), not included.
Code 27578: Fastener (code 54462), not included.

+ info
PDB Product Database
Further information on **PRODUCTS**
www.astralpool.com

SWIMMING POOL COMPETITION PODIUMS



Headwall for podiums

AstralPool has created a headwall that allows starting blocks to be attached. This addition extends our range of products for competition. The item consists of an AISI-304 Stainless Steel structure and plastic grating. The platform can also be used as a turning panel and includes anchors for float lines.

	Code	Standard Pack	Standard Weight in kg	Standard Volume in m³
Headwall, lane width 2 m	**34213**	1	-	-
Headwall, lane width 2.5 m	**34214**	1	-	-
Headwall, right corner	**34215**	1	-	-
Headwall, left corner	**34216**	1	-	-



34216

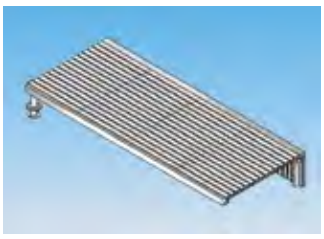

34213 - 2 m
34214 - 2.5 m

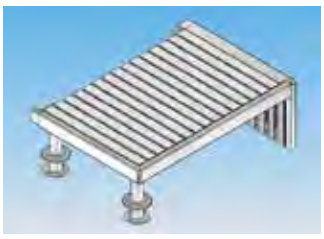

34215

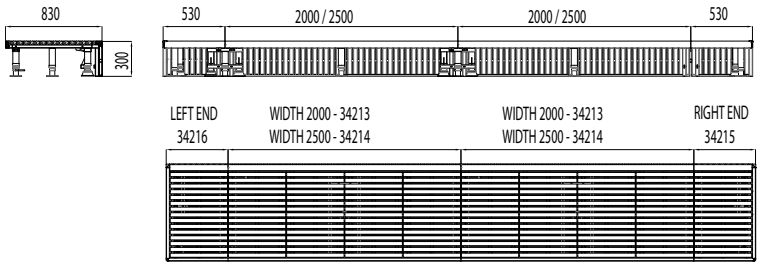

Podium fixing

Anchoring for installation of the podiums in concrete, made in Stainless Steel AISI-304/316, composed by inground base, bolts and washers, with connection to the equipotential circuit.

	Code	Standard Pack	Standard Weight in kg	Standard Volume in m³
Competition podium fixing, made in AISI-316	**54460**	1	2.4	0.02
Fixing for the podium made in AISI-316	**54461**	1	3.5	0.02
Fixing for the podium made in AISI-304	**54462**	1	2.4	0.02

Fastening 54460: For podiums codes 28760 - 28761 - 53875
Fastening 54461: For podiums codes 00144 - 00145 - 19956
Fastening 54462: For podium code 27578



Height 80 mm | Height 100 mm

Starting blocks numbers

4 units of each supplied.

	Code	Standard Pack	Standard Weight in kg	Standard Volume in m³
Height 80 mm				
(For starting blocks 00146 - 27578 - 27836)				
For starting blocks from 1 to 6	**28616**	1	-	-
For starting blocks from 1 to 10	**28617**	1	-	-
Height 100 mm				
(For starting blocks 00144 - 00145 - 19956 - - 28760 - 28761 - 53875)				
For starting blocks BCN03 from 1 to 6	**34200**	1	0.1	0.001
For starting blocks BCN03 from 1 to 10	**34201**	1	0.1	0.001

LANE ROPES



BCN03 Competition lane rope model

Lane ropes supplied assembled with floats, 6 mm stainless steel rope (code 28808), tightener (00208) and spring (01468). Floats with interior turbines with an external Ø of 148 mm in accordance with FINA international swimming federation regulations.

	Code	Standard Pack	Standard Weight in kg	Standard Volume in m^3
25 m				
Red - White colour	**67599**	1	-	-
Red - Green colour	**67601**	1	-	-
Red - Blue colour	**67602**	1	-	-
Red - Yellow colour	**67603**	1	-	-
50 m				
Red - White colour	**67600**	1	-	-
Red - Green colour	**67604**	1	-	-
Red - Blue colour	**67605**	1	-	-
Red - Yellow colour	**67606**	1	-	-





Sydney model

Range comprising lane ropes with an external Ø of 148 mm in accordance with FINA international swimming federation regulation FR 3 for pools for Olympic Games or world championships. Supplied assembled with floats, 6 mm stainless steel rope (code 28808), tightener (00208) and spring (01468).

	Code	Standard Pack	Standard Weight in kg	Standard Volume in m^3
12,5 m*				
White colour	**67607**	1	-	-
16.5 m White colour				
White colour	**67608**	1	-	-
25 m				
Red - White colour	**67609**	1	-	-
Red - Green colour	**67612**	1	-	-
Red - Blue colour	**67613**	1	-	-
Red - Yellow colour	**67614**	1	-	-
33 m^3/h				
Red - White colour	**67610**	1	-	-
50 m				
Red - White colour	**67611**	1	-	-
Red - Green colour	**67615**	1	-	-
Red - Blue colour	**67616**	1	-	-
Red - Yellow colour	**67617**	1	-	-

* Available in other colours (blue, green, yellow)





Roma model

Supplied assembled with floats, 7 mm polyester rope (code 00210), tightener (00209) and hook (00207).

	Code	Standard Pack	Standard Weight in kg	Standard Volume in m^3
12.5 m White colour	**67618**	1	-	-
16.5 m White colour	**67619**	1	-	-
25 m Orange - White	**67620**	1	-	-
33 m Orange - White	**67621**	1	-	-
50 m Orange - White	**67622**	1	-	-

* Available in other colours (Blue, Green, Red)

It is possible to supply any length, colour combination and rope.

+ info PDB Product Database
Further information on **PRODUCTS**
www.astralpool.com

LANE ROPES



Moscow model

Supplied assembled with floats, 7 mm polyester rope (code 00210), tightener (00209) and hook (00207).

		Code	Standard Pack	Standard Weight in kg	Standard Volume in m³
12.5 m	White colour	**67623**	1	-	-
16.5 m	White colour	**67624**	1	-	-
25 m	Orange - White	**67625**	1	-	-
33 m	Orange - White	**67626**	1	-	-
50 m	Orange - White	**67627**	1	-	-

* Available in other colours (Blue, Green, Red)

FLOATS



BCN03 model

Supplied with inner turbine mechanism.

	Code	Standard Pack	Standard Weight in kg	Standard Volume in m³
Colour white	**28204**	-	-	-
green	**28425**	-	-	-
Blue	**28423**	-	-	-
red	**28424**	-	-	-



Sydney model

	Code	Standard Pack	Standard Weight in kg	Standard Volume in m³
Colour white	**54032**	-	-	-
yellow	**54031**	-	-	-
Blue	**54028**	-	-	-
red	**54029**	-	-	-
green	**54030**	-	-	-

Moscow model



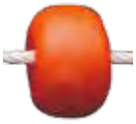

	Code	Standard Pack	Standard Weight in kg	Standard Volume in m³
Moscow propeller:				
Colour white	**00161**	150	7.0	0.070
orange	**00162**	150	7.0	0.070
Blue	**00163**	150	7.0	0.070
red	**00164**	150	7.0	0.070
Rome floaters:				
Colour white	**00149**	500	7.0	0.110
orange	**00150**	500	7.0	0.110
Blue	**00151**	500	7.0	0.110
red	**00152**	500	7.0	0.110

LANE ROPE STORAGE EQUIPMENT



BCN03 Lane rope storage basket

A new trolley designed to transport and store the BCN03 Lane ropes after use in the swimming pool. The BCN03 lane rope storage basket is manufactured of AISI-316 Stainless Steel and includes a PVC bag for collecting excess water from the float lines. Due to the bag's bottom outlets, it is emptied in a controlled manner with no water spillage. The trolley has four castor wheels for maximum mobility. Two of these fitted with brakes. It can store a lane rope up to 50 m long (or 2 of 25) and can be used for all lane rope models.

Code	Standard Pack	Standard Weight in kg	Standard Volume in m^3
28623	1	55.0	0.389

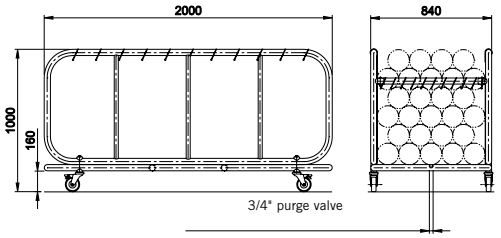



Lane rope roller

Made in Stainless Steel AISI-304, fitted with a large wheel for operation. It is mounted on 4 castor wheels for easy handling. Two of these are fitted with brakes.

	Code	Standard Pack	Standard Weight in kg	Standard Volume in m^3
Width 1.2 m	**58860**	1	27	0.31
Width 1.8 m	**58859**	1	32	0.45

NUMBER OF LANE ROPES COLLECTED

Model	1.2 m			1.8 m		
	25 m	33 m	50 m	25 m	33 m	50 m
ROMA	8	6	4	12	9	6
SIDNEY	2	1	1	3	2	1
MOSCOW	4	2	2	6	3	3

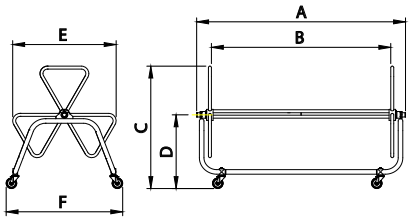

Code	A	B	C	D	E	F
58860	1415	1125	1165	690	970	1085
58859	2015	1725				



Under deck lane rope storage system

Made of AISI-316, allows the storage of the float lines beneath the deck. The float line box is embedded in the pool surround and holds the retractable reel over which the float line slides into the hole. This unit can be complemented with a lane rope collecting bag if required.

Code	Standard Pack	Standard Weight in kg	Standard Volume in m^3
15842	1	12.8	0.08

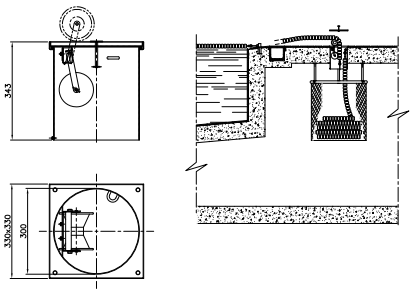

LANE ROPE ACCESSORIES

Zurich/Wiesbaden installation diagram Wiesbaden

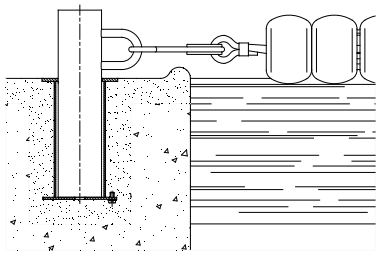

Anchor **code 00141**
Lane rope support **code 00140**

Finnish type installation diagram

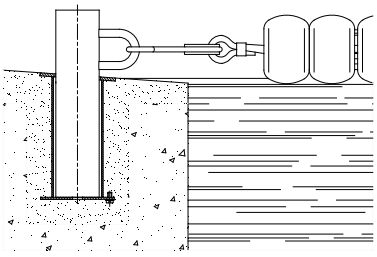

Anchor **code 00142**
Lane rope support **code 00140**

Standard Installation diagram

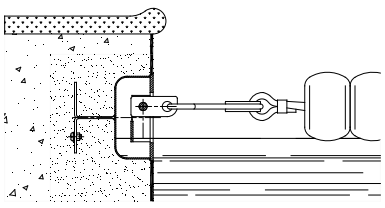

Anchoring cup **code 09206**
code 09207
code 00205
code 00206



Lane rope anchor

Made in AISI-316 stainless steel. To use with anchoring fixture 00141 and 00142.

Code	Standard Pack	Standard Weight in kg	Standard Volume in m^3
00140	2	0.63	0.003



Concrete anchoring cup with central rod

Made in AISI-316 stainless steel.

For concrete pool

Code	Standard Pack	Standard Weight in kg	Standard Volume in m^3
09206	1	0.4	0.001



Concrete anchoring cup with central rod

Made in AISI-316 stainless steel.

For prefabricated pools
with flange, gasket and screws

Code	Standard Pack	Standard Weight in kg	Standard Volume in m^3
09207	1	0.5	0.001



Retractable anchoring cup

Made in AISI-316 stainless steel.

For concrete pool
with a retractable hook

Code	Standard Pack	Standard Weight in kg	Standard Volume in m^3
00205	1	0.46	0.001

LANE ROPE ACCESSORIES



Retractable anchoring cup

Made in AISI-316 stainless steel.

For prefabricated pools with retractable hook, flange, gaskets and screws

Code	Standard Pack	Standard Weight in kg	Standard Volume in m^3
00206	1	0.6	0.001



Lane rope ratchet

Chrome plated brass.

Code	Standard Pack	Standard Weight in kg	Standard Volume in m^3
00208	1	0.97	0.002



Lane rope ratchet

AISI-316 stainless steel.

Code	Standard Pack	Standard Weight in kg	Standard Volume in m^3
00209	1	0.2	0.001



Lane rope spring

AISI-204 stainless steel with cable fastener.

Code	Standard Pack	Standard Weight in kg	Standard Volume in m^3
01468	1	0.62	0.002



Lane rope hook

Stainless Steel AISI-304.

Code	Standard Pack	Standard Weight in kg	Standard Volume in m^3
00207	100	5	0.01

+ info PDB Product Database
Further information on **PRODUCTS**
www.astralpool.com

LANE ROPE ACCESSORIES



Cords and cables

	Code	Standard Pack	Standard Weight in kg	Standard Volume in m³
Ø 7 mm polyester rope	**00210**	110 m	2.0	0.090
AISI-316 stainless steel cable Ø 4 x 6 mm with plastic coating DIN 3055	**00211**	-	0.1	0.001
BCN03 AISI-316 Stainless Steel cable Ø 6 mm without plastic coating	**28808**	-	-	-

SIGNAGE

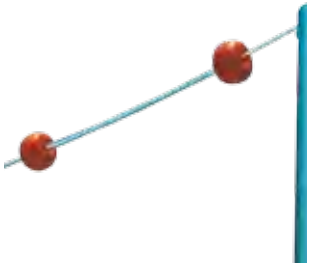

False start indicators

Please indicate pool width when placing your order.
Comprises 2 posts in AISI-316 S.S. (one with pully and quick release cord). Height 1.8 m. Anchoring socket not included.

	Code	Standard Pack	Standard Weight in kg	Standard Volume in m³
False start posts:				
- Pool width up to 21 m Ø 43 mm pipe for use with anchoring sockets 00141 and 00142	**19950**	1	5.6	0.01
- Pool width over 21 m Ø 48 mm pipe for use with anchoring sockets 19960 and 19961	**19951**	1	9.4	0.01
False start floats: Polyester cord and floats	**19954**	1	-	-

NOTE:
You must state the pool dimensions on placing your order.



Backstroke turn indicators

Please indicate pool width when placing your order.
Comprises 4 posts in AISI-316 stainless steel. Height 1.8 m. Anchoring sockets not included.

	Code	Standard Pack	Standard Weight in kg	Standard Volume in m³
Backstroke turn indicator posts				
- Pool width up to 21 m Ø 43 mm pipe for use with anchoring sockets 00141 and 00142	**19952**	1	11.2	0.03
- Pool width over 21 m Ø 48 mm pipe for use with anchoring sockets 19960 and 19961	**19953**	1	20.0	0.03
Backstroke turn indicator bunting 2 units	**19955**	1	-	-

NOTE:
You must state the pool dimensions on placing your order.

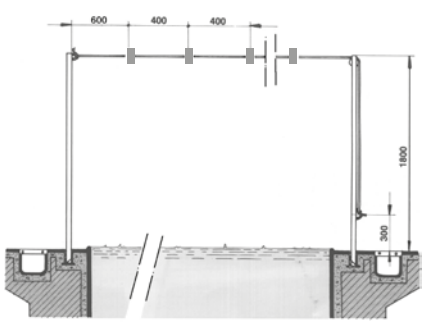

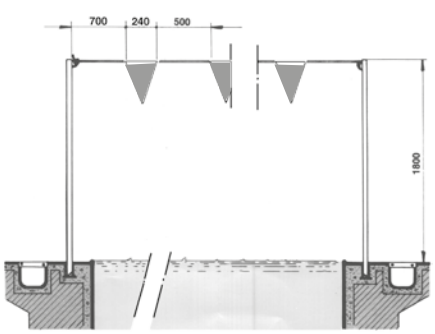

TURNING PANELS



NOTE:
You must state the pool dimensions and depths on placing your order.

Turning panels

In AISI-316 stainless steel with plastic lattice screen. Height 300 mm. Fixing support (00139) is not included

	Code	Standard Pack	Standard Weight in kg	Standard Volume in m^3
Lane width 2 m	**00137**	1	13.6	0.040
Lane width 2.5 m	**00138**	1	16.5	0.051

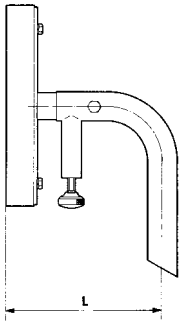

Bracket

AISI-316 stainless steel (for coupling to 00141 and 00142 fasteners). State H and L dimensions and type of overflow channel when placing an order. A minimum of two units are required for each rotating panel.

Code	Standard Pack	Standard Weight in kg	Standard Volume in m^3
00139	1	4.0	0.054

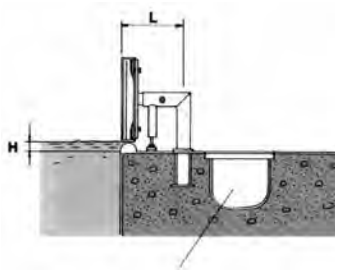

ANCHORING DETAILS WHEN MEASUREMENT «L» IS LESS THAN 500 mm.

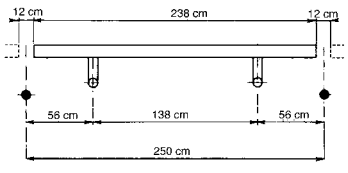

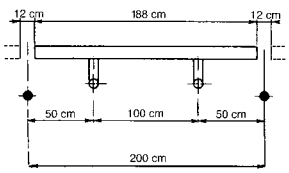

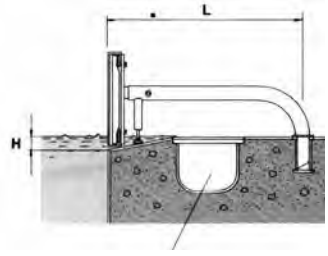

ANCHORING DETAILS WHEN MEASUREMENT «L» IS OVER 500 mm.

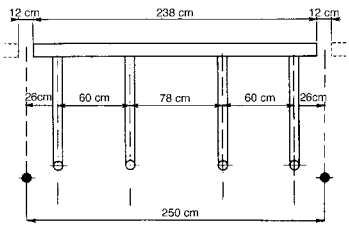

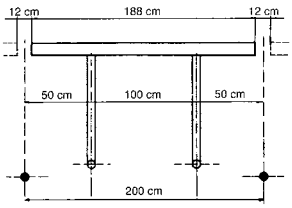

+ info PDB Product Database
Further information on **PRODUCTS**
www.astralpool.com

ATTACHMENTS FOR COMPETITION EQUIPMENT



Horizontal flange anchoring sockets

Zurich-Wiesbaden. In S.S. AISI-316.

	Code	Standard Pack	Standard Weight in kg	Standard Volume in m³
For Ø 43 mm pipe.	**00141**	2	1.17	0.002
For Ø 48 mm pipe.	**19960**	2	1.3	0.002



Angled flange anchoring socket

Finnish. In S.S. AISI-316.

	Code	Standard Pack	Standard Weight in kg	Standard Volume in m³
For Ø 43 mm pipe.	**00142**	2	1.13	0.002
For Ø 48 mm pipe.	**19961**	2	1.26	0.002



Anchoring socket with locking bolts

With bolts. In S.S. AISI-316.

	Code	Standard Pack	Standard Weight in kg	Standard Volume in m³
	00143	2	1.47	0.003

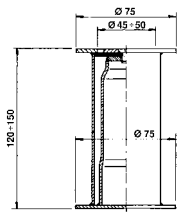

Code 00141
Code 19960

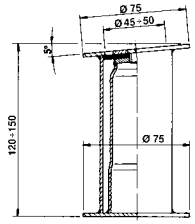

Code 00142
Code 19961

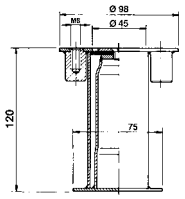

Code 00143

WATER POLO GOAL



Water polo goal

The water polo goal is lightweight, floating and very resistant. It is built entirely from aluminium and is oven-painted white.

Manufacturing and measurements in accordance with FINA international swimming federation standards.

- Floating: Polyurethane foam-filled aluminium floats.
- Goal frame: 80 x 50mm aluminium tube
- Net fastening: 6 mm stainless steel round rod.
- Net side pipe: 23 mm stainless steel round pipe with fastening in frame and float.
- Fastening for goal lines.
- Nets included.

	Code	Standard Pack	Standard Weight in kg	Standard Volume in m³
Official water polo goal kit	**69654**	1	-	-



Inúu Wellness Centre (Andorra)
Architect: Jean-Michel Ruols

WELLNESS SOLUTIONS

FLUIDRA

ASTRALPOOL



Only Fluidra, with more than 40 years' experience and operations worldwide, could become the new leader in the manufacture of stainless steel swimming pools, with its brand INOX POOL.

Much more than swimming pools, their high quality and beauty will leave you with unforgettable memories. Turnkey solutions are available both for residential and public pools (hotels, sports clubs, spas...).

Advantages of an INOX POOL:

- **Durable.** They last a lifetime.
- **Watertight.** They never leak or lose water.
- **Adaptable.** We will design the pool of your dreams, whatever your specifications.
- **Clean.** Dirt does not stick to them.
- **Sustainable.** The stainless steel is fully recyclable.
- **Elegant.** They have unique finishes.

Place your trust in INOX POOL. We will create the pool of your life built to last a lifetime. WARRANTY OF UP TO 20 YEARS.

Customized, integrated solutions adapted to your needs and to your imagination. Hypnotic pools.



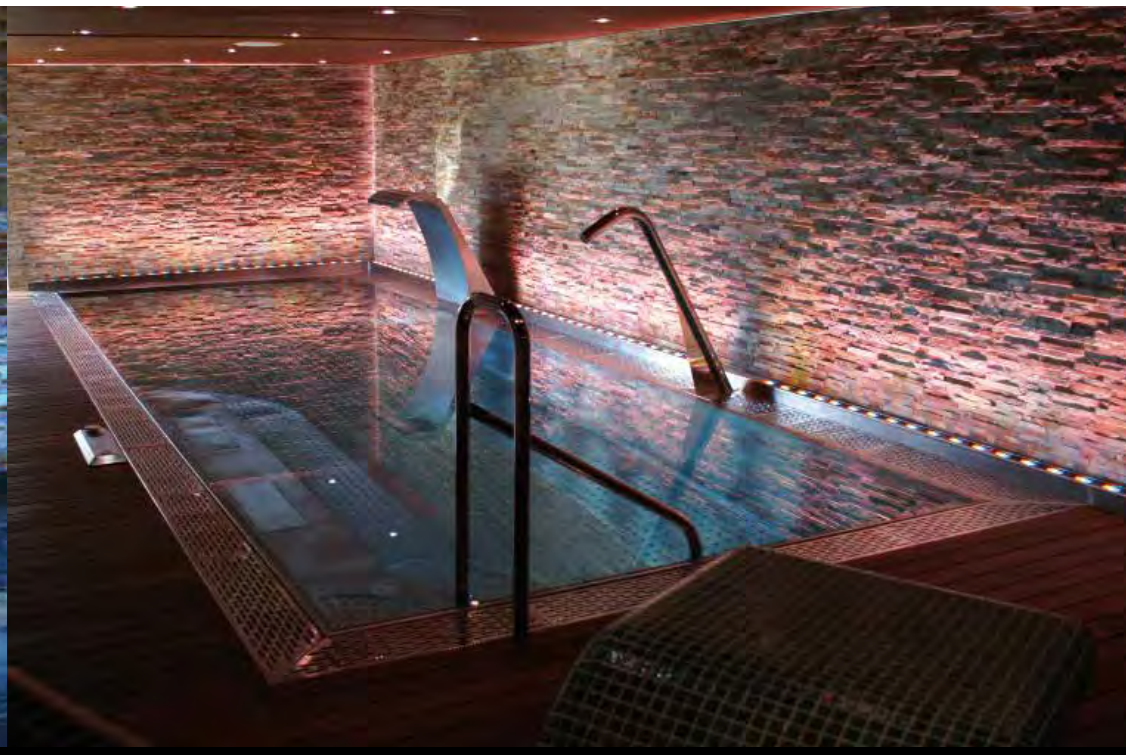

Ask for your new **Wellness** catalogue by AstralPool

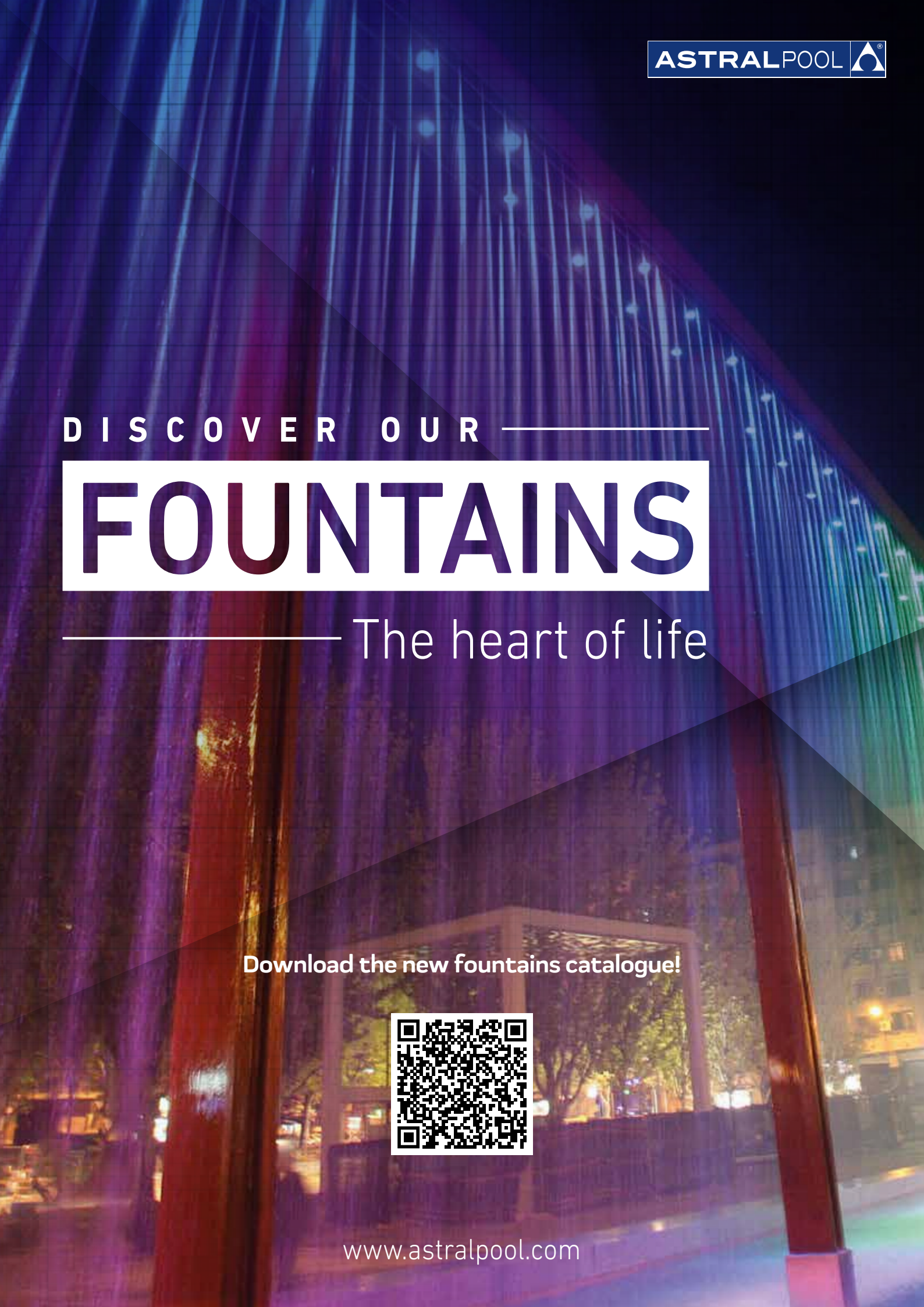
ASTRALPOOL
DISCOVER OUR
FOUNTAINS
The heart of life
Download the new fountains catalogue!
www.astralpool.com

SPA & POOL **INOX SOLUTION**

E X C L U S I V I T Y

INTEGRAL SOLUTIONS, UNIQUE DESIGNS AND CUSTOM SOLUTIONS DEVELOPED CREATE EXCLUSIVE SPACES IN A WELLNESS ENVIRONMENT.

We put at your disposal all the tools and our broad experience to turn your project into reality, adapting our designs to the client's needs. Personalised projects.

Our flexibility and dynamism, as well as our adaptation to the needs and regulations of each market, have led us to build steel solutions in more than 60 countries, making us one of the companies with the greatest international outreach in the sector.

STAINLESS STEEL **CRAFTSMEN**



ASTRALPOOL

Av. Francesc Macià, 60, Planta 17 | 08208 Sabadell (Barcelona) Spain | Tel.: +34 93 724 39 00
www.astralpool.com | www.fluidra.com

FLUIDRA

Notes



FLUIDRA
Avda. Francesc Macià, 60 – Planta 20
08208 Sabadell (Barcelona) – Spain
Tel.: +34 93 724 39 00
www.astralpool.com



POOL & SPA GENERAL CATALOGUE **2021**

FLUIDRA